FED. ROAD DIST.	STATE	FED. AID PROJ. NO.	FISCAL YEAR	SHEET NO.	TOTAL SHEETS
7	KY.				

KENTUCKY DEPARTMENT OF HIGHWAYS
JEFFERSON COUNTY
LOUISVILLE - LEXINGTON
I 64 OVER NO. WESTERN P'KW'Y AND 22ND ST.

ESTIMATED QUANTITIES

SHEET DESIGNATION	SHEET NUMBER	CONCRETE CLASS "A" (CU. YDS.)	CONCRETE CLASS "AA" (CU. YDS.)	STEEL REINFORCEMENT (LBS.)	HIGH-STRENGTH HANDRAIL (LIN. FT.)		(1) STRUCTURAL STEEL (LUMP SUM)	(2) SHEAR CONNECTORS (LUMP SUM)	LINSEED OIL PROTECTIVE COATING (SQ. YDS.)	6" Ø DRAIN PIPE (LIN. FT.)	STRUCTURE EXCAVATION COMMON (CU. YDS.)	END BENT BACKFILL (CU. YDS.)	4" CONCRETE SLOPE PROTECTION (SQ. YDS.)	CONCRETE PILING (LIN. FT.) (See General Notes for description of Alternates) ALTERNATE A FURNISHING	ALTERNATE A DRIVING	ALTERNATE B FURNISHING	ALTERNATE B DRIVING	ALTERNATE C FURNISHING	ALTERNATE C DRIVING	ALTERNATE D FURNISHING	ALTERNATE D DRIVING	ALTERNATE E FURNISHING	ALTERNATE E DRIVING	ALTERNATE F FURNISHING	ALTERNATE F DRIVING	PILE LOADING TESTS (EACH)	STYRENE BUTADIENE PROTECTIVE COATING (GAL.)		
TITLE SHEET	1																												
GENERAL NOTES & STRUCTURAL STEEL NOTES	2-3																												
LAYOUT SHEETS	4-5																												
SOUNDINGS	6												1,270																
END BENTS	7-17	588.6	197.7	48,565	94.0						1,710	640		3,732	3,732	3,732	3,732	3,732	3,732	*3,732	*3,732	3,732	3,732	*3,732	*3,732	2	8		
PIERS	18-30	691.5		(42,420)							858			5,175	5,175	5,175	5,175	5,175	5,175	5,175	5,175	5,175	5,175	5,175	5,175		48		
STRUCTURAL STEEL	31-37			142496			1	1																					
BEARING DETAILS	38																												
EXPANSION DAMS	39-41																												
SUPERSTRUCTURE	42-51		1800.6	337,007	1,450.5				11970																				
DRAIN DETAILS	52-53									405																	57		
CONSTRUCTION ELEVATIONS	54-58																												
PILE RECORDS	59-63																												
TOTALS		1,280.1	1998.3	(728,001) 728068	1,544.5		1	1	11970	405	2,568	640	1,270	8,907	8,907	8,907	8,907	8,907	8,907	8,907	8,907	8,907	8,907	8,907	8,907	2	113		

NOTE:

For "Bill of Incidental Material", see Sheet No. 2

(Standard Drawings listed below are the current editions and are to be used with these plans)

AWS 2.A Modifications and Additions to AWS D2.0-66 Specifications
G353F Preformed Joint Seal Details for Concrete Bridge Floors
G-354 c Premolded Cork Expansion Joint Material Details for Concrete Bridge Floors
H117C High-Strength Aluminum Handrail
H150B High-Strength Concrete Handrail
SF2a Details for Placing End Bent Backfill and Earth Core

REFERENCES

P-2 14" Reinforced Concrete Precast Pile
P-20 14" Cast-in-Place Concrete Pipe Pile
P-21A 14" Cast-in-Place Concrete Pile, Fluted Steel Shell
P-22 14" Cast-in-Place Pile, Corrugated Steel Step-Taper Shell
P-23 14" Prestressed Precast Concrete Pile
P-24 14" Cast-in-Place Concrete Pile, Corrugated Steel Step-Uniform Shell
AE1-B Armored Edge for Concrete
AE2-B Armored Edge for Joints in Concrete
SP1 4" Concrete Slopewall
17.40 Guard Rail Connectors To Bridge Wings.

BRIDGE OVER N. WESTERN PARKWAY AND 22ND ST

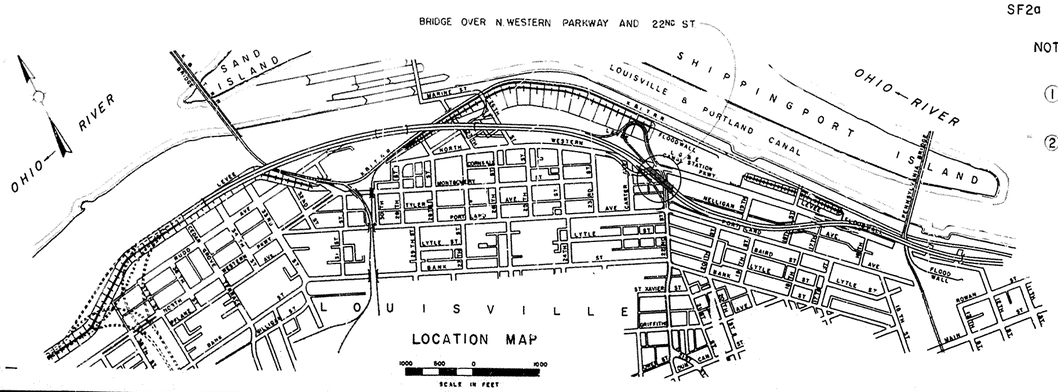

NOTE:

For General Notes see Sheet No. 2

(1) STRUCTURAL STEEL: Approximately 1,525,000 Lbs. included in lump sum for bid for Structural Steel. This weight does not include over run or weld material

(2) SHEAR CONNECTORS: Approximate weights included in lump sum bid for this item:
Option 1 - 5/8" x 4" Diameter Spirals 13,000 Lbs.
Option 2 - 3/4" x 4" Studs 11,400 Lbs.
Option 3 - 4" Channel at 5.4 lbs. 16,800 Lbs.

*3,732 Lin. Ft. of one of alternate types A, B, C or E shall be used in the End Bents and paid for at the unit prices bid for furnishing and driving respectively for alternate D or F.

SPECIAL NOTES

Reinforced Concrete Bridge Floors (for Riverside Parkway)

SPECIAL PROVISIONS

#77-B Styrene - Butadiene Protective Coating.
#79 Concrete Bridge Deck Finishing Machine.
#80 Blast Cleaning and Painting Structural Steel. (Alkyd System)
#12 Joint Sealing Compound
#37-B Preformed Compression Joint Seals
#8A Linseed Oil Protective Coating
#35-B Class "AA" Concrete.
#30-B Membrane Curing of Concrete Structures.
#31 Pile Load Tests
#36A Set - Retarding Admixture

TITLE SHEET

BRIDGE OVER NORTH WESTERN PARKWAY AND 22ND STREET

SHEET / OF

COMMONWEALTH OF KENTUCKY
DEPARTMENT OF HIGHWAYS
FRANKFORT
COUNTY OF
JEFFERSON
164-CEDAR GROVE TERRACE TO 13TH STREET
LOUISVILLE-LEXINGTON ROAD

STATION 146+90 PROJECT NO. SP 56-273-IIL 164-2(34)1

BRIDGE NUMBER I 64-2(73)-2 DRAWING NO. 17123 INDEX

HAZELET & ERDAL CONSULTING ENGINEERS FILE NO. 887-C

DESIGNED BY ... DATE ... CHECKED BY ... DATE ...
DETAILED BY ... DATE ... CHECKED BY ... DATE ...
TRACED BY ... DATE ... CHECKED BY ... DATE ...
REVISED ... DATE ... REVISED ... DATE ... REVISED ... DATE ...

Bar reinforcement 2900

BRIDGE

FED. ROAD DIST.	STATE	FED. AID PROJ. NO.	FISCAL YEAR	SHEET NO.	TOTAL SHEETS
7	KY.				

SPECIFICATIONS: Kentucky Department of Highways, 1955 Standard Specifications, current edition, with Revisions, Special Provisions and Special Notes shall apply to this Project.

DESIGN LOAD: Bridge designed for HS20-44 loading as specified in 1951 AASHO Specifications, including Interim Specifications for 1951, 1952, 1953 and 1954, or alternate loading of two 24 kip axles spaced 4 feet apart, whichever produces the greater stress. Dead load includes 20 pounds per square foot of roadway surface allowance for future wearing surface.

DESIGN STRESSES: For reinforced concrete:

f_s = 20,000 psi. u = 200 psi. for embedment
f'_c = 3,000 psi. u = 300 psi. for Σ_o
f_c = 1,200 psi. n = 10

For structural steel:

f_s = 20,000 psi. for A36 steel.

FOUNDATION PILE LOADS: Piles are designed for a maximum load of 60 tons per pile. This maximum is for Group I Loads with increases allowed for other loading groups in accordance with AASHO Article 1.4.1.

ALTERNATE TYPES OF PILES: The Contractor shall use one of the following types throughout except that Alternates D and F will not be permitted for the end bents:

Alternate A - 14" Reinforced Concrete Precast Piles, Standard Drawing P-2, current edition.
Alternate B - 14" Cast-in-place Concrete Pipe Pile, Standard Drawing P-20, current edition.
Alternate C - 14" Cast-in-place Concrete Pile, Fluted Steel Shell, Standard Drawing P-21, current edition.
Alternate D - 14" Cast-in-place Pile, Corrugated Steel Step-Taper Shell, Standard Drawing P-22, current edition.
Alternate E - 14" Prestressed Precast Concrete Pile, Standard Drawing P-23, current edition.
Alternate F - 14" Cast-in-place Concrete Pile, Corrugated Steel Step-Uniform Shell, Standard Drawing P-24, current edition.

PILING: Piling shall be driven to refusal or to the resistance computed by the applicable formula of Article 402.3.6-C determined from the Loading Tests as adequate for the 120 ton test load.

Test piles shall be driven where designated in the Plans to determine the length required. All test piles shall be accurately located so that they may be used in the finished structure.

Piling shall be cored through the embankment before starting driving.

PLACING FILLS AT END BENTS: See Standard Drawing SF2, current edition.

DRIVING PILES: Cored pilot holes through the end bent embankments will be required for starting piles. The cost of the work is to be included in the unit price bid per lineal foot for driving piles.

COORDINATION WITH CONTRACTOR ON ADJACENT PROJECTS: In addition to the requirements of Article 1.5.6 of the Standard Specifications, this Contractor shall coordinate his work with that of Contractors on adjacent sections of this Project.

CONCRETE: Class 'AA' Concrete is to be used throughout for superstructure and for portions of end bent backwall and wingwalls above bridge seat elevation.

Class 'A' Concrete is to be used in all other parts of the substructure except in piles. Class 'D' Concrete is to be used in piles.

SLOPE PROTECTION: Slope protection shall be 4" Concrete Slopewall in accordance with Standard Drawing SP-1, current edition.

OPTIONAL TYPE OF HIGH-STRENGTH HANDRAIL: The Contractor shall provide throughout the project at his option, either High-Strength Aluminum Handrail in accordance with Standard Drawing H117 or High-Strength Concrete Handrail in accordance with Standard Drawing H150, each current edition.

MEMBRANE CURING COMPOUND: White pigment curing compound shall be applied to the bridge deck in accordance with the special provision, except that the membrane compound used shall have a resinous base.

CIRCULAR SECTION REINFORCED CONCRETE COLUMNS: This note modifies the requirements of Article 404.3.1 and 403.3.8 for pier columns of grade separation structures. The concrete shall be placed, finished and cured as specified in Article 404.3.1 except as required by the following:

(a) All forms for the circular section columns shall be made of metal or shall be plastic or plastic-lined so as to give the surface a true, smooth, cylindrical shape free from fins, joints, and irregularities.

(b) The concrete shall be placed in, and carefully vibrated against, the forms to assure smooth surfaces without voids, honeycomb, air pockets or irregularities in the surface.

(c) A rubbed surface finish will not be required for the columns as specified in Article 403.3.8-C. Instead, the surface shall be finished as specified in Article 403.3.8-B.

No extra payment will be made to the Contractor for the use of metal, plastic or plastic-lined forms, nor for placing or finishing the concrete. The cost of furnishing the forms, placing the concrete, and finishing as specified shall be included in the unit price bid for Class 'A' Concrete.

SLAB FORMS: Stay-in-Place forms will not be permitted for the concrete bridge floors.

BEVELED EDGES: All exposed edges shall be beveled 7/8" unless otherwise shown.

REINFORCEMENT: Dimensions shown from face of concrete to bars are to the center of bars unless noted as clear distance. Spacing of bars is from center to center of bars.

SPIRAL REINFORCEMENT: Splices for spirals where desired by the Contractor shall be made with a minimum of one and one-half turns of spiral. No additional payment will be made for these splices, but the cost will be considered incidental to the cost of the developed length of spiral shown on the Plans. Spiral reinforcement shall meet the requirements of Section 641.5.0 of the Standard Specifications. One-half inch round bar may be substituted for No. 4 size bar.

EXPANSION JOINT MATERIAL, SEALS & SEALING COMPOUND: The cost of these items is to be included in the unit price bid for Class 'AA' Concrete.

SET-RETARDING ADMIXTURE FOR CONCRETE: An approved admixture shall be added to the concrete for the bridge floor slabs to delay the initial set of the concrete so as to permit the placement and finishing of concrete in Spans 3W and 4W, and 3E, 4E and 5E (continuous units). The admixture and its use shall conform to the Special Provisions. The amount of delay shall be dependent on the quantity of admixture and the quantity used shall be carefully determined on the basis of temperature, relative humidity, wind conditions and required placing time. The retarding action shall delay the initial set in each span until after the next adjacent span in the same continuous unit has been placed. The Contractor shall secure the Engineer's approval of the quantities of admixture to be used for each placement.

STRUCTURAL STEEL: 'Lump Sum Bid' for structural steel shall be full payment for all structural steel, rivets, bolts, washers, steel pins, cast iron, lead plates, anchor bolts, molten lead, welding and welding materials, floor drains, paint, linen tracings of shop detail and erection drawings, and for all labor and materials necessary to erect the steel in accordance with the Plans and Specifications.

LINSEED OIL PROTECTIVE COATING: Linseed Oil Protective Coating shall be applied in accordance with the special provision, except that it shall only be applied to the bridge deck between the gutter lines and shall not be applied until after the styrene-butadiene protective coating has been applied to the curbs and plinths.

STEEL GIRDERS: The longitudinal steel girders are designed to carry their own weight and the weight of the concrete slab by the steel section. Live load and the weights of curbs, plinth, railing, future wearing surface, etc. are carried by the composite section in positive moment regions. The continuous girders are designed as continuous for all loads. Temporary supports or shoring will not be permitted under the steel girders when taking 'top of steel' elevations or when placing the concrete floor slab.

Girders which do not conform to plan camber and grade in the erected position shall be considered as requiring either an adjustment in depth of concrete haunch over the steel supporting members, at no additional cost to the State, or a reworking of the girder camber to meet the plan grade and slab thickness at no additional cost to the State.

SHEAR CONNECTORS. The Contractor shall use one of the following optional types throughout the project where indicated in the Plans:

Option 1 - 5/8" x 4" diameter spirals.
Option 2 - 3/4" x 4" studs.
Option 3 - 4" channel @ 5.4 lbs./ft.

Spiral bar shear connectors shall be structural grade billet steel, ASTM A15. Stud shear connectors shall be beaded studs of weldable steel with a yield point of 50,000 psi. and ultimate tensile strength of 60,000 psi. minimum as determined by applicable sections of ASTM Designation A370. Tensile tests of finished studs shall be made on studs welded to test plates using test fixtures that grip the stud head and plate without torsion. If the fracture occurs outside the middle half of the gage length, the test shall be repeated. Channel shear connectors shall be structural steel conforming with ASTM A36.

Shear connectors shall be shop or field welded to the tops of the steel girders as shown. Detail drawings for the shear connectors will be required as specified for 'Structural Steel'. Spirals and channels shall be electric arc welded. Stud shear connectors shall be welded automatically with approved equipment made for that purpose. All weld slag and all porcelain ferrules shall be removed in the shop before shipping, but if shear connectors are field welded, the slag and ferrules shall be removed before placing concrete.

Shear connectors and welds shall be tested by bending selected connectors toward the center of the span at an angle of 30 degrees to vertical. Cracks in the weld or connector after bending shall indicate failure and will require replacement of the defective connector and testing of additional connectors on the same beam. Connectors accepted after testing shall remain in the bent position. Before placing concrete, all surfaces (tops of beams, diaphragms and shear connectors) are to be thoroughly cleaned of all rust, grease and foreign matter.

Lump Sum Bid for 'Shear Connectors' shall be full payment for all shear connectors, welding and welding materials, equipment, tools, labor, detail drawings, patent royalties, and materials and incidentals necessary to place shear connectors on the girders in accordance with the Plans.

DRAIN PIPE: The drain pipe for the bridge floor drainage shall be in accordance with Section 411.3.5 of the Standard Specifications.

The pipe shall be of the size shown on the plans and shall be painted with two coats of red lead and two coats of aluminum paint in accordance with the requirements for shop and field painting structural steel.

The drain pipe will be measured in lineal feet on the centerline of the pipe. This item will be paid for at the unit price bid per lineal foot, which price shall include and be full payment for furnishing and installing, complete in place and accepted, all materials including weld materials and welding, brackets, pipe clamps and hangers, fittings, connections, hardware and tools, paint and painting equipment and incidentals necessary to complete the work.

WIND LOADS: This structure is designed using wind loads based on a wind velocity of 84 miles per hour.

CONSTRUCTION IDENTIFICATION: The names of the prime contractor and the sub-contractor shall be imprinted in the concrete with one inch letters at a location designated by the Engineer. The Contractor shall furnish all plans, equipment and labor necessary to do the work for which no direct payment will be made.

4-BOLT INSERT ASSEMBLY: The cost of this item is to be included in the unit price bid for Class "A-A" Concrete.

BILL OF INCIDENTAL MATERIAL

ITEM	UNIT	AMOUNT	LOCATION
1"x3/8" Joint Sealing Compound	Lin. Ft.	665	At all Metal Expansion Dams
Preformed Joint Seal for 1" Const. Jt.	Lin. Ft.	430	Slab at all Fixed Suspanders and End Bent RB
4-Bolt Insert Assembly	Ea.	6	Wingwalls No.1 thru No.6
Polyvinyl Waterstop	Lin. Ft.	27 13	End Bent A End Bent B
1" Premolded Cork Exp. Jt. Material	Sq. Ft.	135 145 45 105 55 26 26	Fixed Susp. Span 1 Fixed Susp. Span 7 Fixed Susp. Span R1 End Bent A End Bent B End Bent RB Pier R3
1/2" Premolded Cork Exp. Jt. Material	Sq. Ft.	10 5	End Bent A End Bent B

NOTE: Quantities shown in Bill of Incidental Material are approximate only, and the Contractor is responsible for furnishing enough material to complete the work in accordance with the Plans and Specifications.

BRIDGE OVER NORTH WESTERN PARKWAY AND 22ND STREET

SHEET 2 OF 63

GENERAL NOTES

COMMONWEALTH OF KENTUCKY
DEPARTMENT OF HIGHWAYS
FRANKFORT
COUNTY OF
JEFFERSON
I 64-CEDAR GROVE TERRACE TO 13TH STREET
LOUISVILLE-LEXINGTON
ROAD S.P. 56-273-IIL

STATION 146+90 **PROJECT NO.** I 64-2(34)1

BRIDGE NUMBER | DRAWING NO. 17123 | INDEX

DESIGNED BY NES & WE CHECKED BY
DETAILED BY CSB CHECKED BY
TRACED BY CHECKED BY
DATE 6-66 DATE DATE
REVISED DATE REVISED DATE REVISED DATE

FED. ROAD CY.	STATE	FED. AID PRO. NO.	FISCAL YEAR	SHEET NO.	TOTAL SHEETS
7	KY.				

These notes are modifications of, and additions to, Section 408 of the Standard Specifications. Division, Section and Article numbers and letters appearing herein refer to portions of the Standard Specifications bearing the same designation.

MATERIAL SPECIFICATIONS: The following ASTM Designations shall govern the materials furnished:

A36-67	Structural steel, for all steel unless otherwise noted on the Plans.
A27-65	Carbon Steel Castings, Grade 70-36.
A48-64	Gray Iron Castings
A325-66b	High Strength Steel Bolts, Nuts and Plain Hardened Washers.
B29-55(1966)	Sheet Lead and Pig Lead.
A370-67	Mechanical Testing of Steel Products (Stud Shear Connectors).

SHOP DETAIL DRAWINGS: The Contractor shall submit shop detail drawings of all structural steel to the Bridge Engineer for approval in accordance with Section 408.3.1-A of the Specifications. Qualification tests of all welding procedures shall be completed by the Contractor and approved by the Engineer prior to the final approval of shop drawings and start of fabrication.

DESIGN: Shop welded construction is intended for all built-up members unless otherwise indicated. 7/8" diameter High-Strength Bolts will be used for shop and field connections as shown on the Plans.

SHOP ASSEMBLING: Reaming of holes for each bolted splice of the continuous girders shall be required. Each continuous girder unit shall be completely shop assembled with parts adjusted to line, elevations, camber and fit for drilling or reaming. Girders shall remain assembled for inspection by the Department of Highways Inspector, and are to be match-marked while assembled.

Connections for the cross frames, diaphragms, expansion joints and other minor members may be punched or drilled full size without assembly, subject to the requirements in the Specifications for general reaming.

HIGH STRENGTH BOLTED CONNECTIONS: These are designed as friction type connections. Open holes shall be 15/16" diameter for 7/8" diameter bolts. All high strength bolted connections shall be in accordance with Article 408.3.1-F of the Standard Specifications. Installation of bolts shall be by the turn-of-nut method.

WELDS: All welding shall conform to the American Welding Society Specifications for Welded Highway and Railway Bridges, AWS D2.0-66, with modifications and additions as stated on the Plans and Standard Drawing ANS-2, current edition.

PROHIBITED FIELD WELDING: Except as noted on the plans, no welding of any nature shall be performed on the load carrying members of the bridge without the written consent of the Director, Division of Bridges, or his authorized representative, and then only in the manner and at the locations designated in the authorization.

GIRDER WEB PLATES: Web Plates shall be cut to provide for camber as indicated on the Plans. Provide for possible warpage due to extra heat in top flange by virtue of shear connectors. Optional shop welded web plate splices for the girders may be made by the Contractor at the approximate third points of the girder spans and shall be located on shop details. Such splices will not be paid for, but the cost thereof shall be included in the lump sum price bid for "Structural Steel".

GIRDER FLANGES: Prior to approval of the shop detail drawings, the Contractor may request permission from the Engineer to extend a thicker flange plate in the direction of a smaller to eliminate one or more butt welded flange splices. No extra payment will be made for the additional steel weight.

MILL TEST REPORTS: Notarized Mill Test Reports, in triplicate, shall be furnished to the Kentucky Department of Highways showing that all materials furnished conform to the Specifications.

DIMENSIONS: Dimensions shown on the Plans are for a normal temperature of 60° Fahrenheit with dead load on the structure. Tapes used by the Contractor, including the structural steel fabricator and erector, shall have been calibrated correctly with the U. S. Bureau of Standards to insure correct fit of the steelwork.

MISFITS: With prior approval of the Engineer, the correction of minor misfits involving harmless amounts of reaming, cutting and chipping will be considered a legitimate part of the erection. However, any error in the shop fabrication or deformation resulting from handling and transportation which prevents the proper assembling and fitting up of parts by the moderate use of drift pins or by a moderate amount of reaming and slight chipping or cutting, shall be reported immediately to the Inspector and his approval of the method of correction obtained. The correction shall be made in his presence.

BLAST CLEANING AND PAINTING : Weld spatter shall be cleaned in accordance with AWS 413(a) before shop painting. Exposed surfaces of steel not accessible after erection and not in contact with concrete shall be given the required field coats of paint before erection. Shop paint shall not be applied within three inches of open holes where high strength bolts are to be used, and to surfaces in contact with concrete. All structural steel, except pins and pin bearing surfaces, shall be cleaned and painted in accordance with the current edition of the special provision for Blast Cleaning and Painting Structural Steel.

Exterior surfaces of the cast iron drain body which will be in contact with concrete shall not be painted or coated and shall be free from rust, mold, sand or other foreign material. Other surfaces which will not be in contact with concrete shall be painted as required for structural steel.

Pins and pin bearing surfaces shall be coated in the shop with a mixture of white lead and tallow in accordance with the specifications.

STEEL FINISH: Steel bearing surfaces in contact shall be finished in accordance with Article 408.3.1H of the Specifications.

DESIGNED BY WES	CHECKED BY CSB	DATE	REVISED
DETAILED BY WES	CHECKED BY CSB	DATE 6-66	REVISED
TRACED BY	CHECKED BY	DATE	REVISED

BRIDGE OVER NORTH WESTERN PARKWAY
AND 34TH STREET

SHEET 3 OF 63

COMMONWEALTH OF KENTUCKY
DEPARTMENT OF HIGHWAYS
FRANKFORT
COUNTY OF
JEFFERSON
164-CEDAR GROVE FERRY TO 13TH STREET
LOUISVILLE-LEXINGTON
ROAD

STATION 146+00 PROJECT NO. 164-2(34)1 S.P. 56-273-1IL

BRIDGE NUMBER | DRAWING NO. 17123 | INDEX

STRUCTURAL STEEL NOTES

FED. ROAD DIST.	STATE	FED. AID PRO. NO.	FISCAL YEAR	SHEET NO.	TOTAL SHEETS
7	KY.				

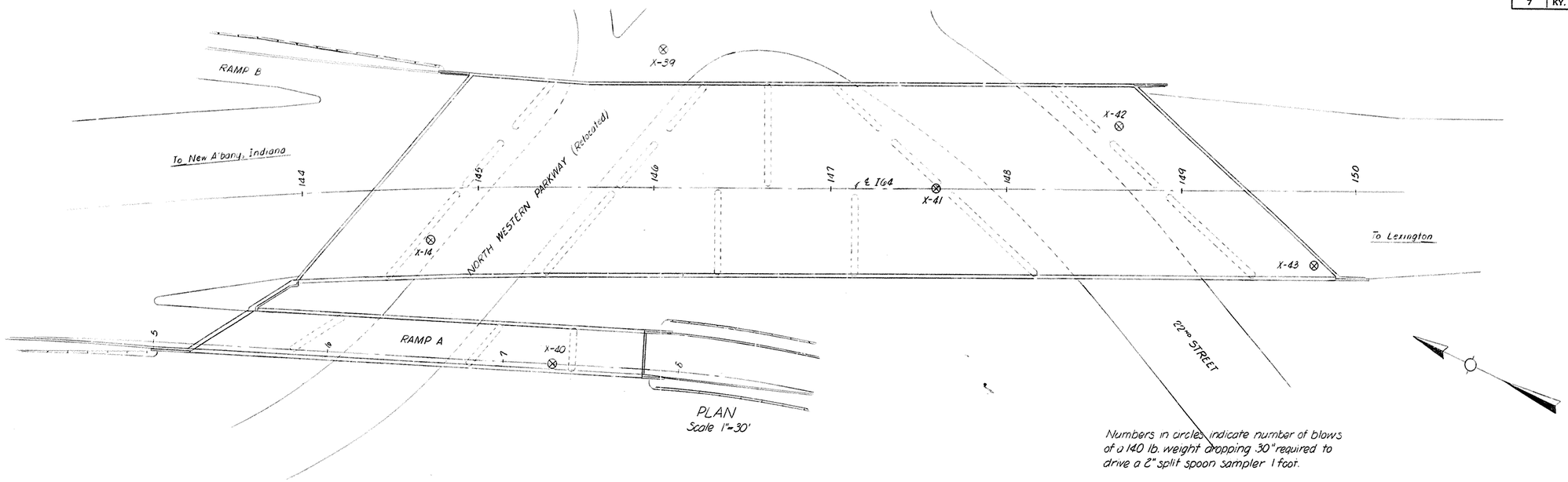

PLAN
Scale 1"=30'

Numbers in circles indicate number of blows of a 140 lb. weight dropping 30" required to drive a 2" split spoon sampler 1 foot.

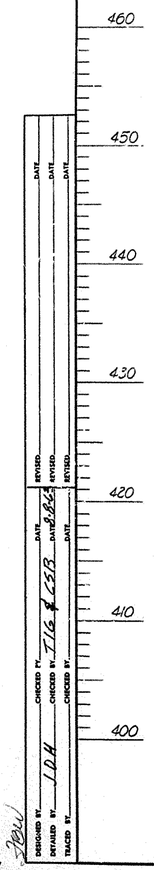

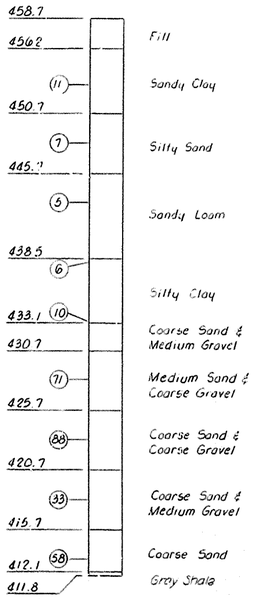

SOUNDING X-14
28' Rt, Sta 144+73

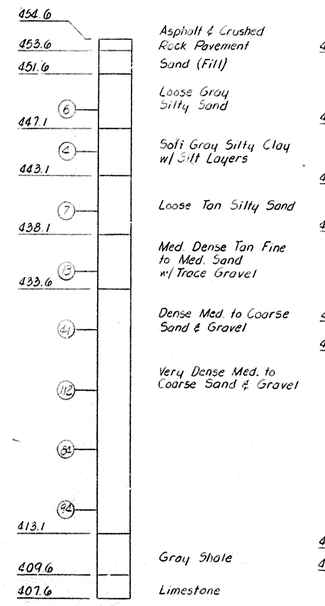

SOUNDING X-39
75' Lt, Sta 146+04

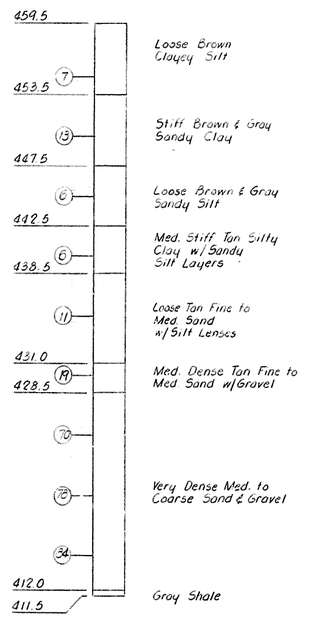

SOUNDING X-40
Ramp "A" ℄, Sta 7+28

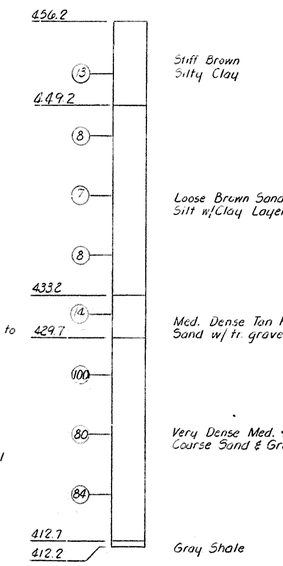

SOUNDING X-41
℄, Sta. 147+60

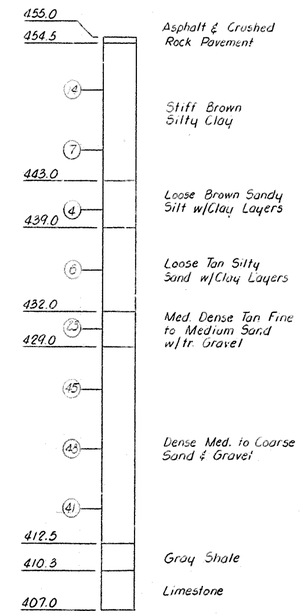

SOUNDING X-42
30' Lt, Sta. 148+65

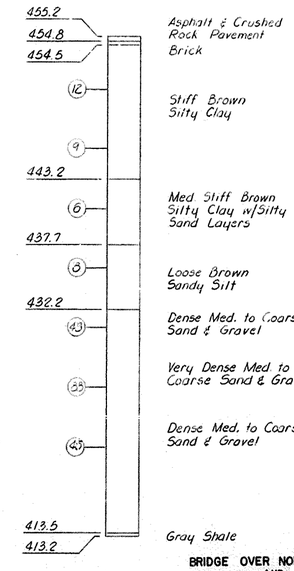

SOUNDING X-43
40' Rt, Sta 149+76

BRIDGE OVER NORTH WESTERN PARKWAY AND 22ND STREET

SHEET 6 OF 63

COMMONWEALTH OF KENTUCKY
DEPARTMENT OF HIGHWAYS
FRANKFORT
COUNTY OF
JEFFERSON
I64-CEDAR GROVE TERRACE TO 13TH STREET
LOUISVILLE - LEXINGTON
ROAD
SP 56-273-11L
STATION 146+90 **PROJECT NO.** I64-2(34)

DESIGNED BY: I.D.H. CHECKED BY: T.I.G. & C.S.B. DATE 8-8-63 REVISED DATE
DETAILED BY: CHECKED BY: DATE REVISED DATE
TRACED BY: CHECKED BY: DATE REVISED DATE

HAZELET & ERDAL CONSULTING ENGINEERS FILE NO. 847-B

BRIDGE NUMBER

DRAWING NO. 17123

INDEX

SOUNDINGS

FED. ROAD DIST.	STATE	FED. AID PROJ. NO.	FISCAL YEAR	SHEET NO.	TOTAL SHEETS
7	KY.				

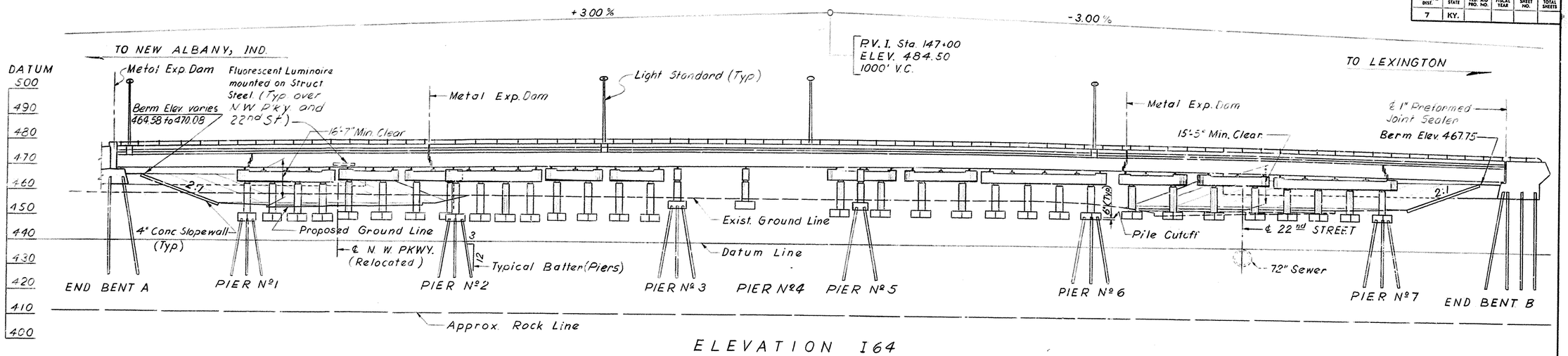

ELEVATION I64

NOTE:
Span Lengths and framing vary. (See Plan of Superstructure this sheet)
Skew Angle varies (See sheet Nº 4)
Bridge designed for H S 20-44 loading as specified in 1961 AASHO Specifications including Interim Specifications for 1961 1962 1963 and 1964 or alternate loading of two 24 kip axles spaced 4 feet apart whichever produces the greater stress.
1-44'-4" and 1-54'-4" Roadway, both flared at north end. 9" wide Brush Curbs and 2'-4" Median. Shoulder widths vary.
2:1 Fill Slopes.

Ramp A	Bridge Seat Elev.	Bottom of Footing Elev.	Height (Br Seat to Bott. Ftg.)
End Bent RA	465.578	459.578	6'-0"
Pier Nº R1	465.528	447.028	18'-6"
Pier Nº R2	465.849	448.766	17'-1"
Pier Nº R3	465.833	454.000	11'-10"
End Bent RB	464.789	458.789	6'-0"

	Eastbound Roadway			Westbound Roadway		
	Bridge Seat Elev.	Bottom of Footing Elev.	Height (Br Seat to Bott. Ftg.)	Bridge Seat Elev.	Bottom of Footing Elev.	Height (Br Seat to Bott. Ftg.)
End Bent A	Varies	—	—	Varies	—	—
Pier Nº 1	466.210	447.410	18'-9"	468.211	448.544	19'-8"
Pier Nº 2	467.475	448.475	19'-0"	469.119	449.619	19'-6"
Pier Nº 3	468.659	453.659	15'-0"	—	—	—
Pier Nº 4	—	—	—	469.279	453.279	16'-0"
Pier Nº 5	469.057	453.557	15'-6"	—	—	—
Pier Nº 6	468.987	451.487	17'-6"	469.120	447.870	19'-3"
Pier Nº 7	468.182	450.682	17'-6"	468.249	450.000	18'-3"
End Bent B	468.753	462.753	6'-0"	468.753	462.753	6'-0"

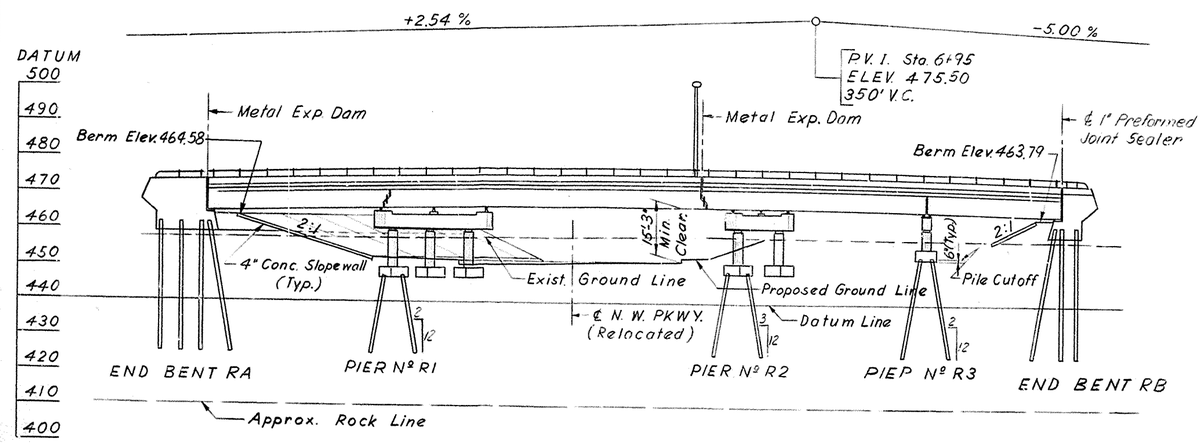

ELEVATION RAMP A

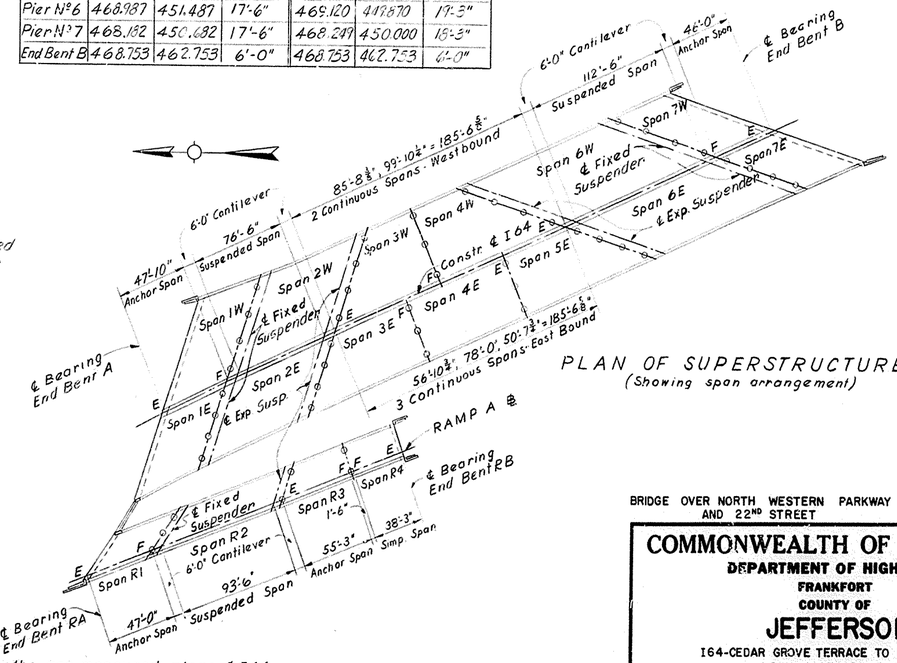

PLAN OF SUPERSTRUCTURE
(Showing span arrangement)

NOTE: Span lengths are measured along ℄ I64 and Ramp A Base Line
F denotes Fixed Bearing
E denotes Expansion Bearing

LAYOUT

BRIDGE OVER NORTH WESTERN PARKWAY AND 22ND STREET

SHEET 5 OF 63

COMMONWEALTH OF KENTUCKY
DEPARTMENT OF HIGHWAYS
FRANKFORT
COUNTY OF
JEFFERSON
I64-CEDAR GROVE TERRACE TO 13TH STREET
LOUISVILLE-LEXINGTON ROAD
S.P. 56-273-IIL

STATION 146+90 **PROJECT NO.** I64-2(341)

BRIDGE NUMBER | DRAWING NO. 17123 | INDEX

DESIGNED BY		CHECKED BY	DATE REVISED
DETAILED BY H.A.S.		CHECKED BY CSB	DATE REVISED
TRACED BY		CHECKED BY	DATE REVISED

FED. ROAD DIST.	STATE	FED. AID PROJ. NO.	FISCAL YEAR	SHEET NO.	TOTAL SHEETS
7	KY.				

CURVE DATA RAMP A
P.I. = 9+44.39
Δ = 25°23'-53"
D = 8°00'-00"
T = 161.39
L = 317.48
R = 716.20

CURVE DATA RAMP B & C
P.I. = 22+38.66
Δ = 52°26'-40.9"
D = 13°-00'-00"
T = 217.08'
L = 403.42'
R = 440.74'

CURVE DATA NORTH WESTERN PARKWAY

P.I. = 9+77.34	P.I. = 13+68.50
Δ = 61°-10'-36.8"	Δ = 25°25'-43.5"
D = 19°-05'-54.9"	D = 19°-05'-54.9"
T = 177.34'	T = 67.69'
L = 320.32'	L = 133.14'
R = 300.00'	R = 300.00'

CURVE DATA 22nd STREET
P.I. = 18+52.58
Δ = 42°-42'-19.1"
D = 12°-00'-55.2"
T = 186.42'
L = 355.42'
R = 476.86'

CURVE DATA I 64
P.I. = 136+83.69
Δ = 36°-21'-23"
D = 2°-00'
T = 940.69'
L = 1817.82'
R = 2864.79'
E = 150.49'
S.E. = .031'/ft.

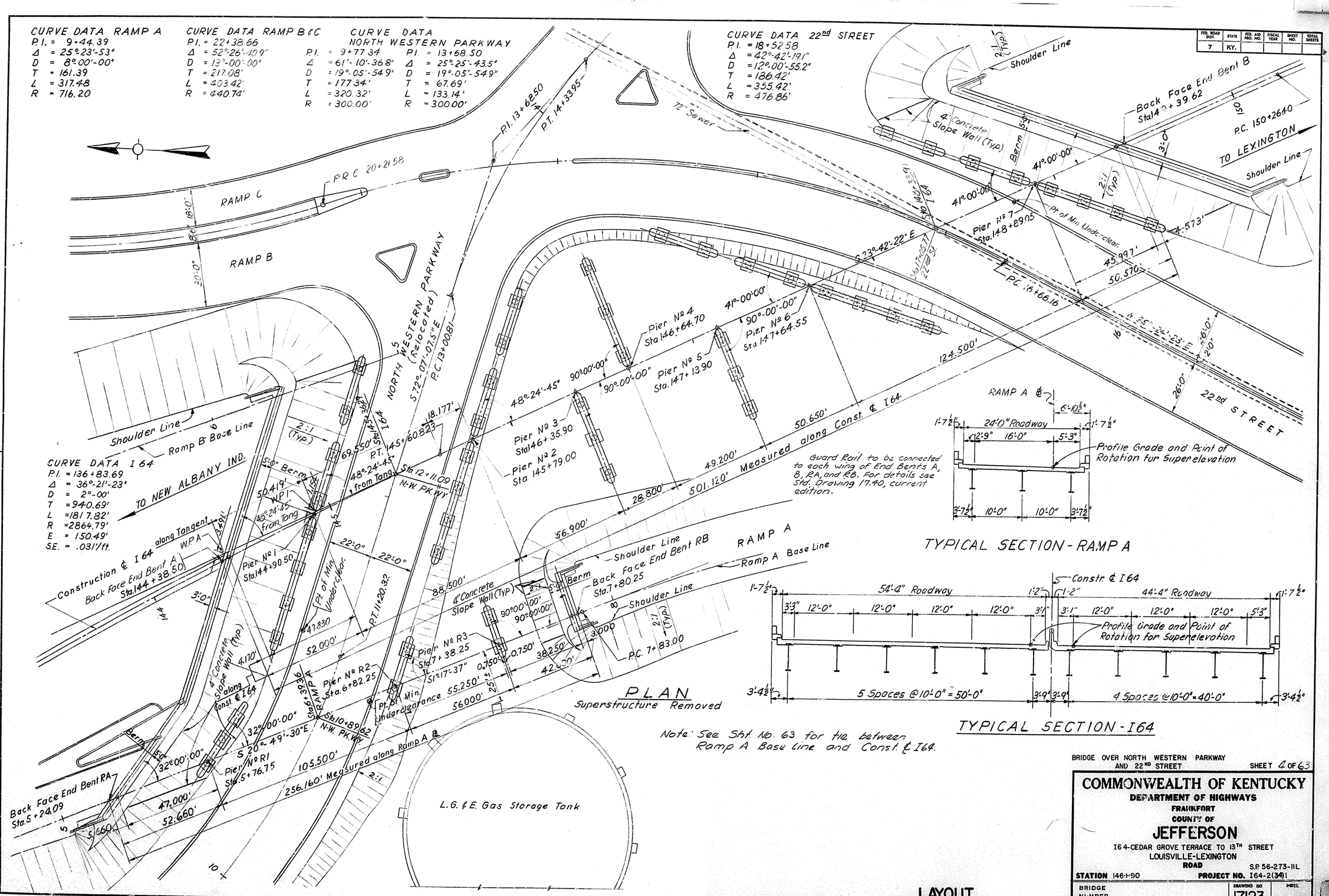

PLAN
Superstructure Removed

TYPICAL SECTION - RAMP A

TYPICAL SECTION - I64

Note: See Sht. No. 63 for tie between Ramp A Base Line and Const. ℄ I64.

BRIDGE OVER NORTH WESTERN PARKWAY AND 22ND STREET

SHEET 4 OF 63

COMMONWEALTH OF KENTUCKY
DEPARTMENT OF HIGHWAYS
FRANKFORT
COUNTY OF
JEFFERSON
I 64-CEDAR GROVE TERRACE TO 13TH STREET
LOUISVILLE-LEXINGTON
ROAD
S.P. 56-273-11L

STATION 146+90 **PROJECT NO.** I64-2(34)

BRIDGE NUMBER | DRAWING NO 17123 | SHEET

LAYOUT

FED. ROAD DIST.	STATE	FED. AID PROJ. NO.	FISCAL YEAR	SHEET NO.	TOTAL SHEETS
7	KY.				

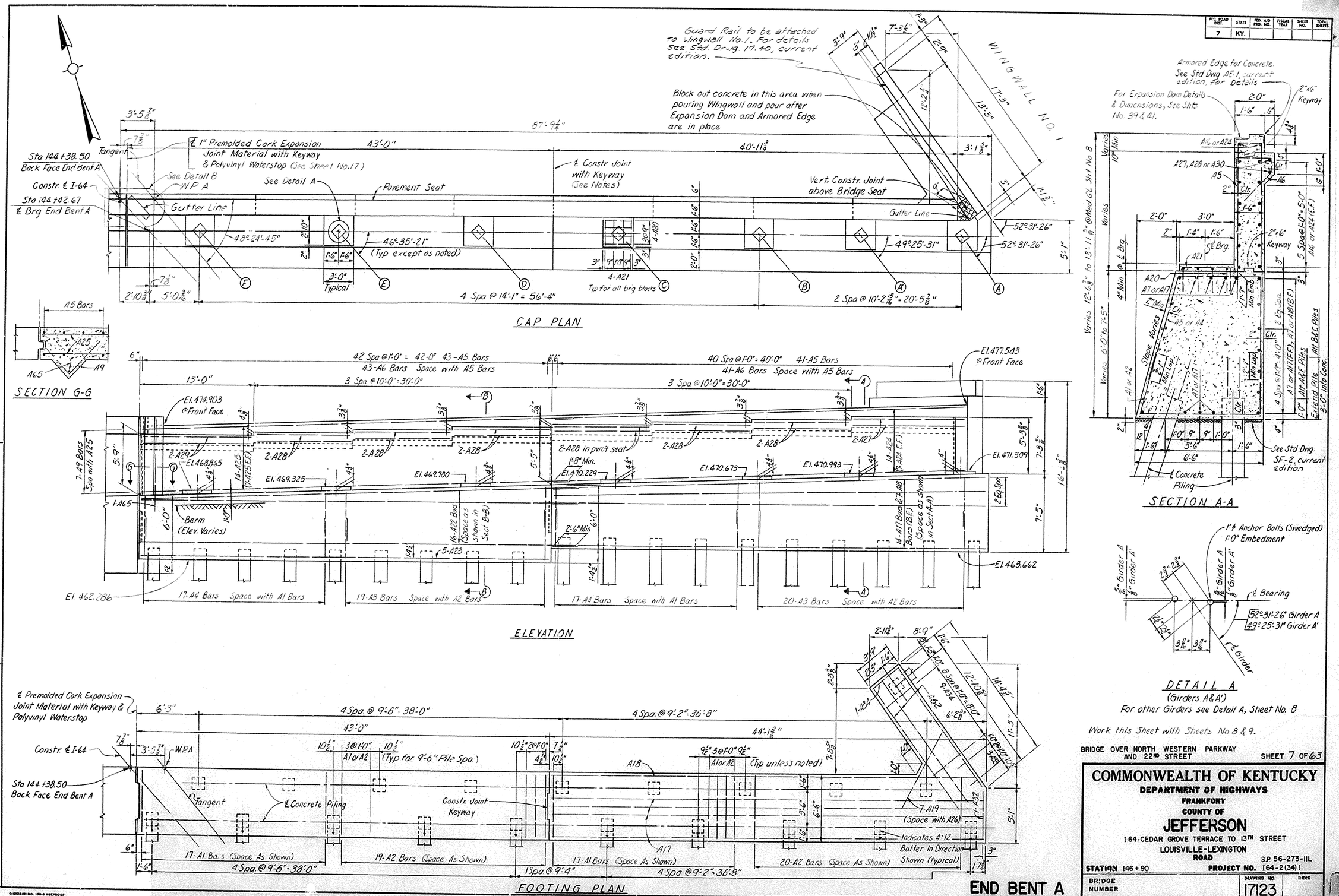

Work this Sheet with Sheets No 8 & 9.

BRIDGE OVER NORTH WESTERN PARKWAY AND 22ND STREET

SHEET 7 OF 63

COMMONWEALTH OF KENTUCKY
DEPARTMENT OF HIGHWAYS
FRANKFORT

COUNTY OF

JEFFERSON

I 64-CEDAR GROVE TERRACE TO 13TH STREET

LOUISVILLE-LEXINGTON ROAD

S.P. 56-273-IIL

STATION 146+90 PROJECT NO. I 64-2(34)1

BRIDGE NUMBER | DRAWING NO. 17123 | INDEX

DESIGNED BY DMB CHECKED BY TIG DATE
DETAILED BY TIG CHECKED BY DATE
TRACED BY CHECKED BY DATE
REVISED REVISED REVISED

FED. ROAD DIST.	STATE	FED. AID PROJ. NO.	FISCAL YEAR	SHEET NO.	TOTAL SHEETS
7	KY.				

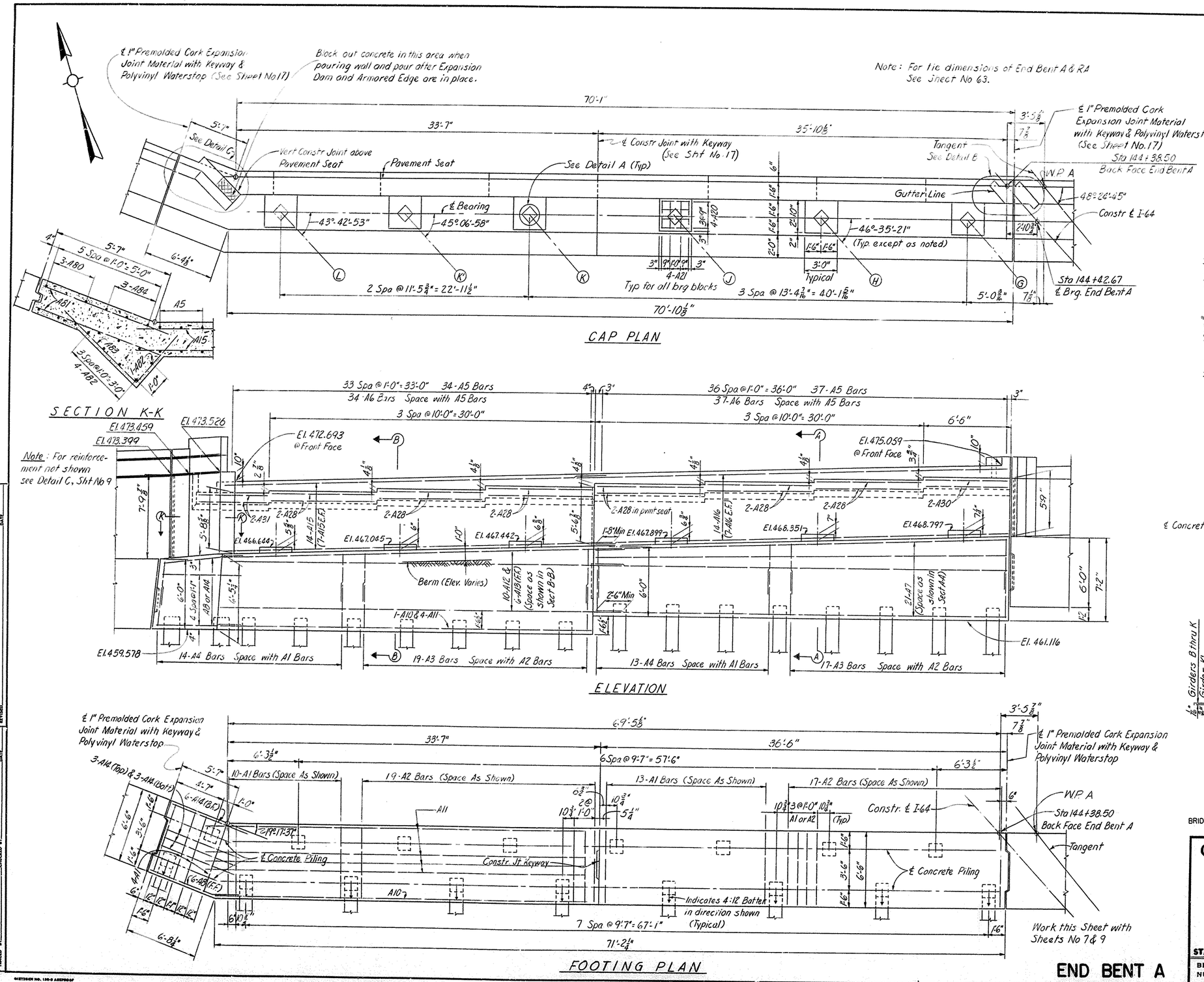

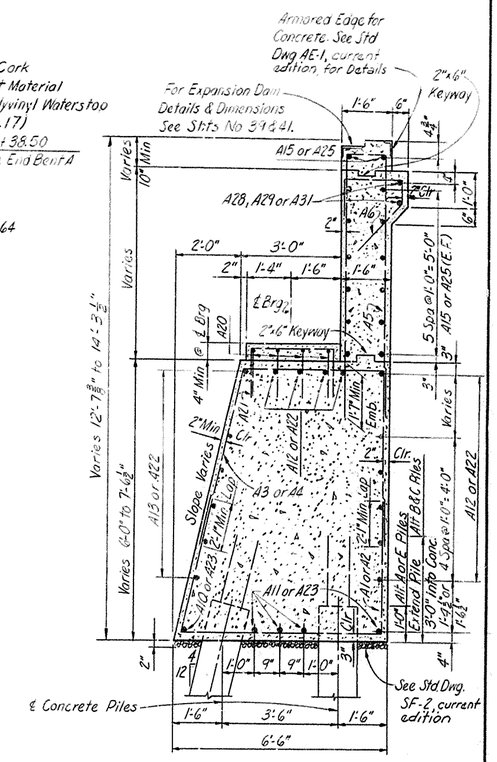

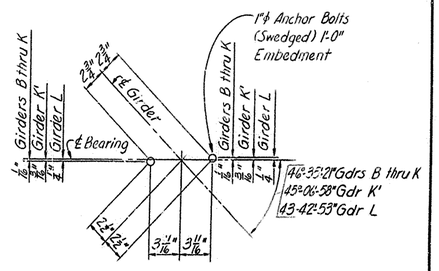

DETAIL A
(Girders B thru L)

BRIDGE OVER NORTH WESTERN PARKWAY AND 22ND STREET

SHEET 8 OF 63

COMMONWEALTH OF KENTUCKY
DEPARTMENT OF HIGHWAYS
FRANKFORT
COUNTY OF
JEFFERSON

I64- CEDAR GROVE TERRACE TO 13TH STREET
LOUISVILLE-LEXINGTON
ROAD

STATION 146+90 **PROJECT NO.** I64-2(34)1 S.P. 56-273-IIL

BRIDGE NUMBER | DRAWING NO. 17123 | INDEX

DESIGNED BY | DETAILED BY D.M.B. | TRACED BY | CHECKED BY | REVISED | DATE

FED. ROAD DIST.	STATE	FED. AID PROJ. NO.	FISCAL YEAR	SHEET NO.	TOTAL SHEETS
7	KY.				

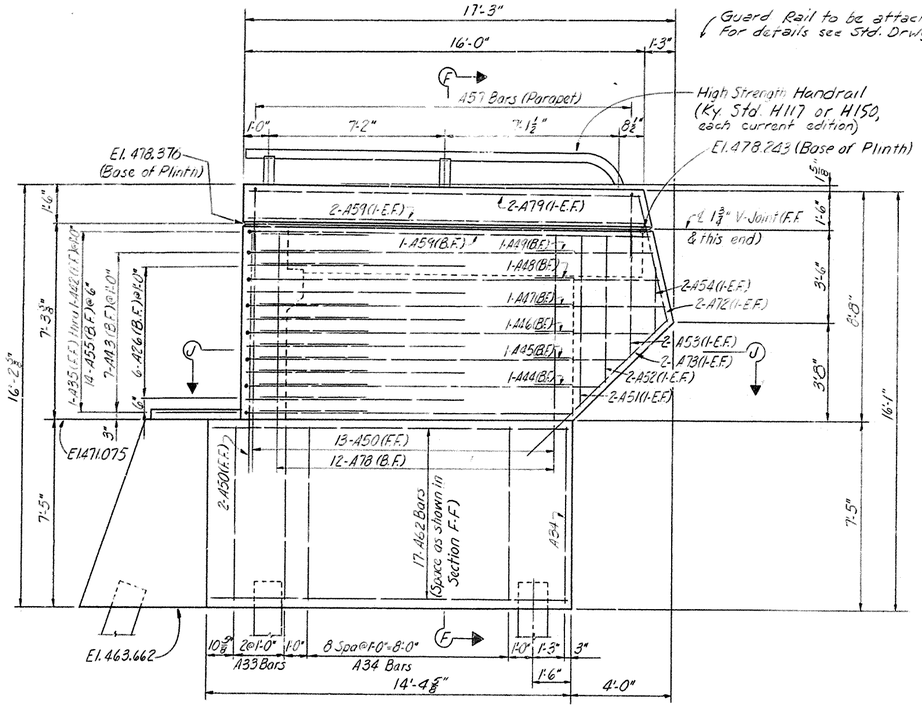

WINGWALL NO. 1 ELEVATION

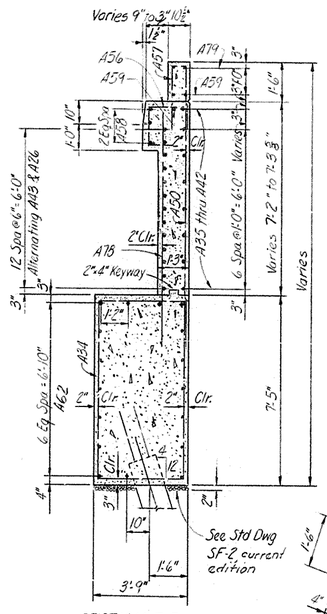

SECTION F-F

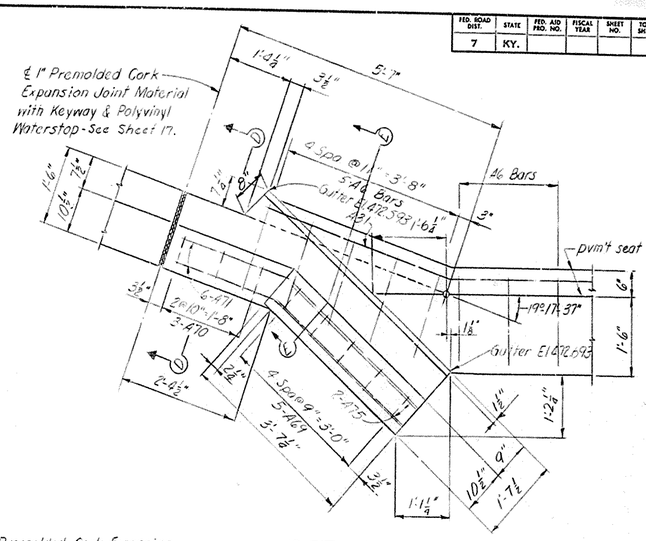

DETAIL C

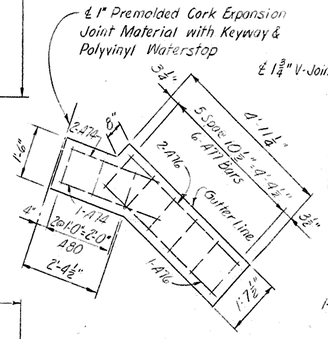

DETAIL C SHOWING SAFETY CURB

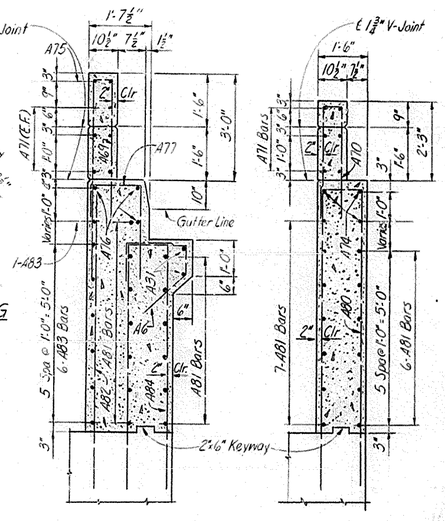

SECTION E-E SECTION D-D

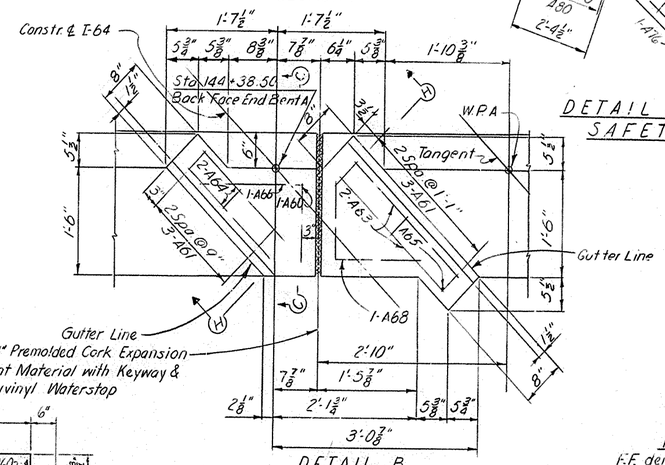

DETAIL B

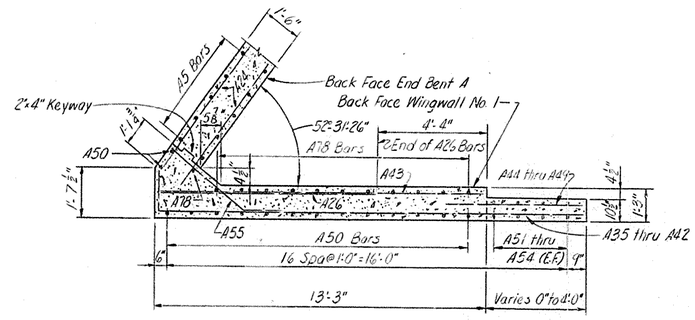

SECTION J-J

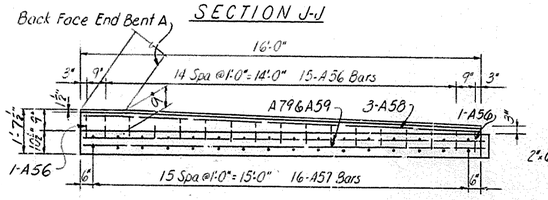

SAFETY CURB PLAN FOR WINGWALL NO. 1

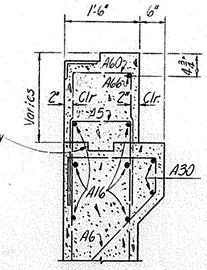

SECTION C-C

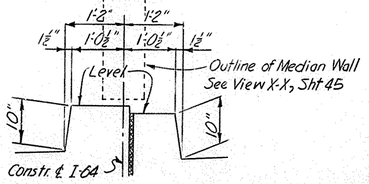

VIEW H-H

NOTES

F.F. denotes Front Face
B.F. denotes Back Face
E.F. denotes Each Face
For other End Bent Notes, see Sheet No. 12

Work this Sheet with Sheets No. 7 & 8

END BENT A

BRIDGE OVER NORTH WESTERN PARKWAY AND 22ND STREET

SHEET 9 OF 63

COMMONWEALTH OF KENTUCKY
DEPARTMENT OF HIGHWAYS
FRANKFORT
COUNTY OF
JEFFERSON
164-CEDAR GROVE TERRACE TO 13TH STREET
LOUISVILLE-LEXINGTON ROAD

S.P. 56-273-111L

STATION 146+90 PROJECT NO. 164-2(34)1

BRIDGE NUMBER | DRAWING NO. 17123 | INDEX

DESIGNED BY | CHECKED BY | DATE | REVISED
DETAILED BY DMB | CHECKED BY TIG 8-86 | DATE 8-86 | REVISED
TRACED BY | CHECKED BY | DATE | REVISED

DIETZGEN NO. 138-3 ASEPROOF

FED. ROAD DIST.	STATE	FED. AID PRO. NO.	FISCAL YEAR	SHEET NO.	TOTAL SHEETS
7	KY.				

Note:
For tie dimensions of End Bent A
& End Bent RA see Sheet No. 63.

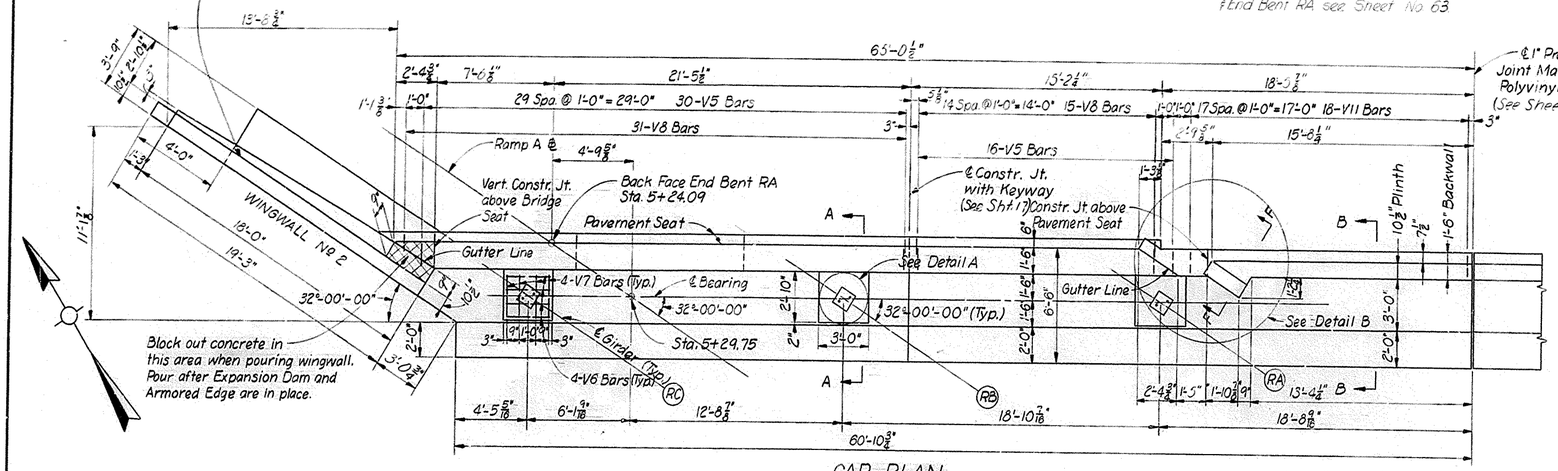

CAP PLAN

℄ 1" Premolded Cork Expansion Joint Material with Keyway and Polyvinyl Waterstop. (See Sheet No. 17)

For Expansion Dam Details and Dimensions see Snts. No. 39 & 41

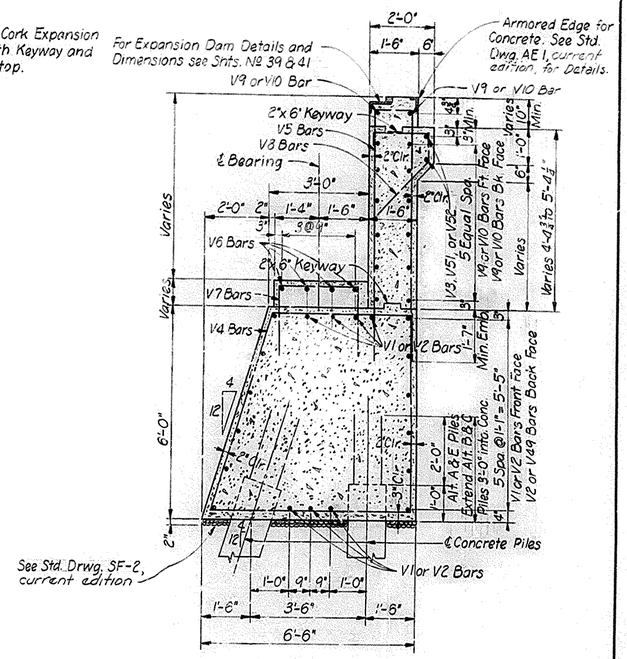

SECTION A-A

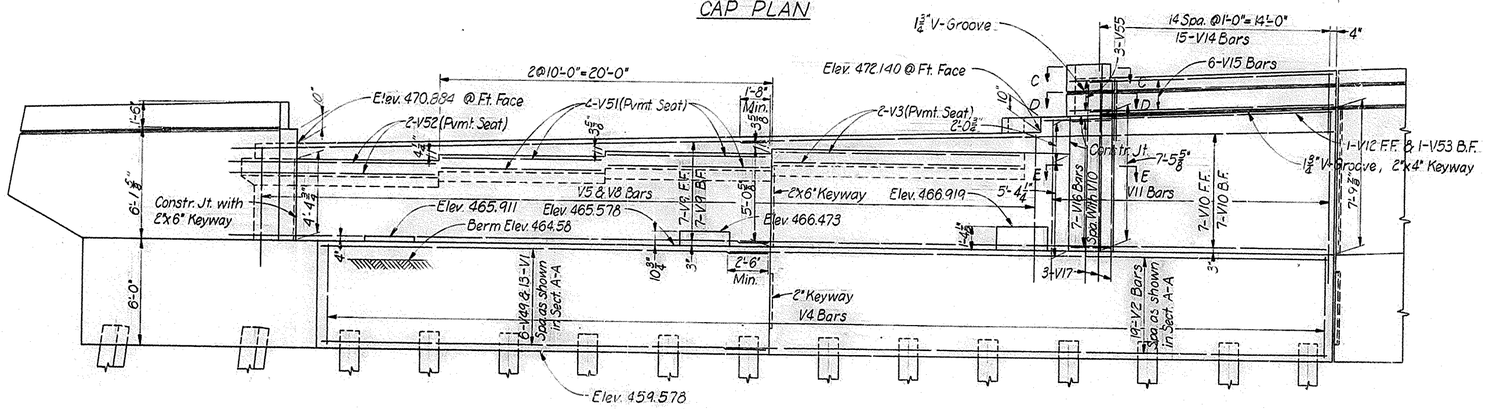

ELEVATION

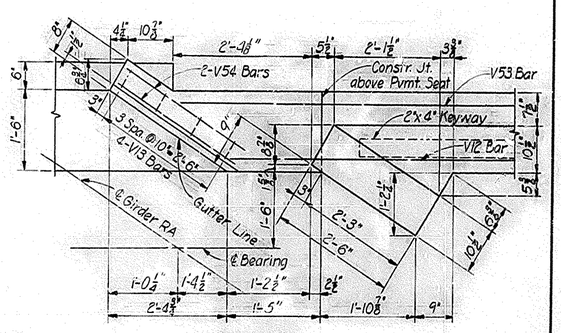

DETAIL B

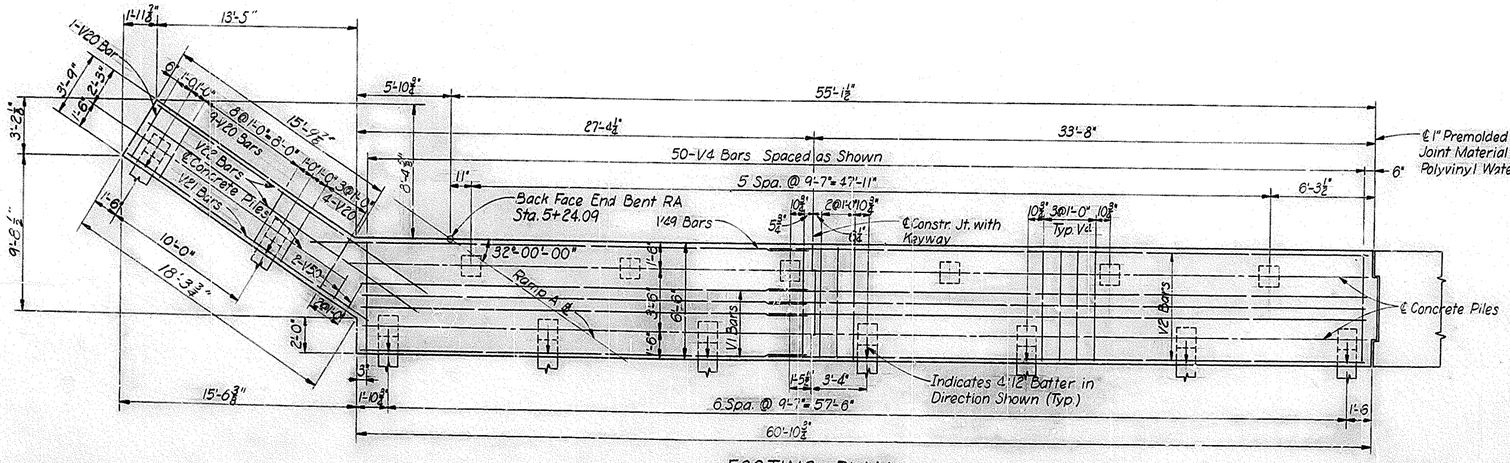

FOOTING PLAN

Work this sheet with Sheet No. 11.

BRIDGE OVER NORTH WESTERN PARKWAY AND 22ND STREET

SHEET 10 OF 63

COMMONWEALTH OF KENTUCKY
DEPARTMENT OF HIGHWAYS
FRANKFORT
COUNTY OF
JEFFERSON
I64-CEDAR GROVE TERRACE TO 13TH STREET
LOUISVILLE-LEXINGTON
ROAD

S.P. 56-273-111L

STATION 146+90 **PROJECT NO.** I64-2(34)1

BRIDGE NUMBER | DRAWING NO. 17123 | INDEX

END BENT RA

DESIGNED BY: PAE	CHECKED BY: TIG (FEW)	DATE: 4-66	REVISED:
DETAILED BY: PAE	CHECKED BY:	DATE:	REVISED:
TRACED BY:	CHECKED BY:	DATE:	REVISED:

T16 JBW

GERTGEN NO. 1-59-2 LEXPROOF

FED. ROAD DIST.	STATE	FED. AID PROJ. NO.	FISCAL YEAR	SHEET NO.	TOTAL SHEETS
7	KY.				

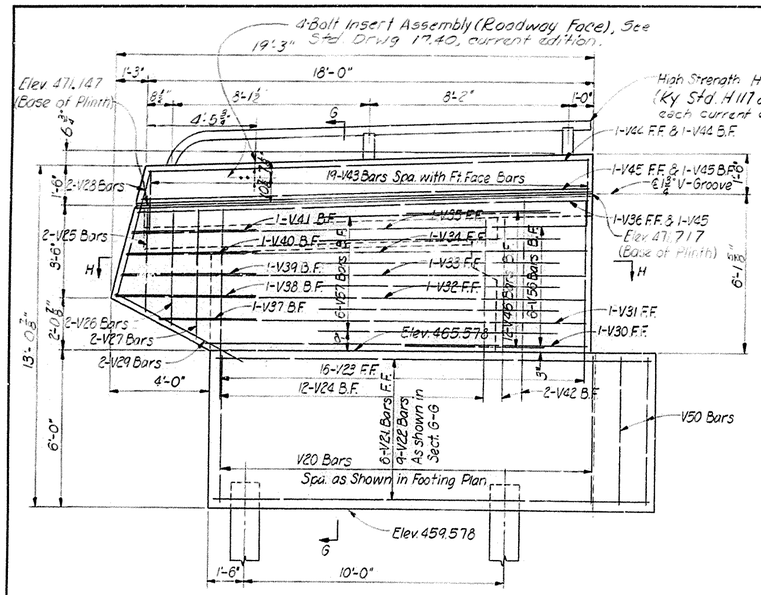

WINGWALL Nº 2 ELEVATION

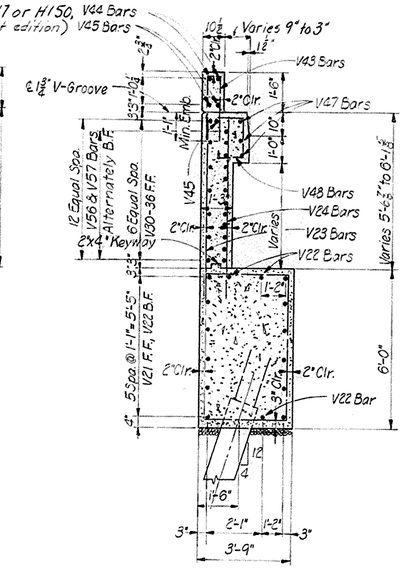

SECTION G-G

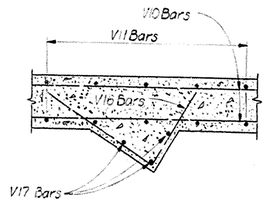

SECTION E-E

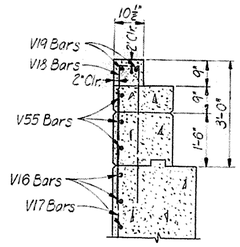

SECTION F-F

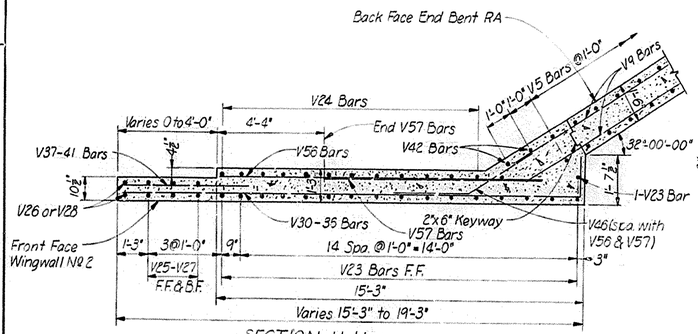

SECTION H-H

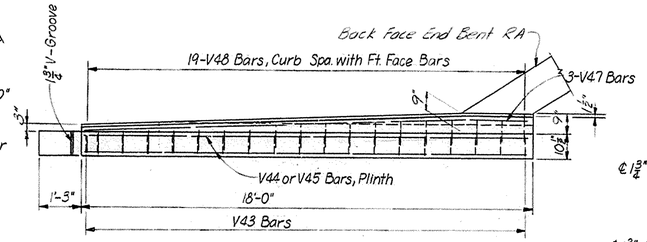

CURB PLAN

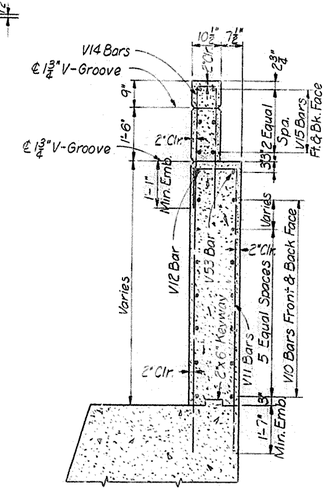

SECTION B-B

NOTES

F.F. denotes Front Face
B.F. denotes Back Face
E.F. denotes Each Face
For other End Bent notes see Sht. Nº 12.

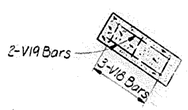

SECTION C-C

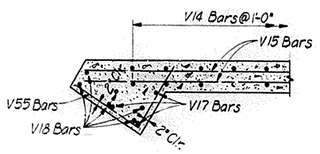

SECTION D-D

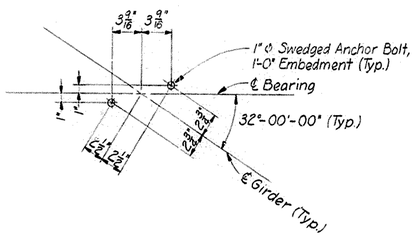

DETAIL A

Work this sheet with Sheet Nº 10

BRIDGE OVER NORTH WESTERN PARKWAY AND 22ND STREET

SHEET 11 OF 63

COMMONWEALTH OF KENTUCKY
DEPARTMENT OF HIGHWAYS
FRANKFORT
COUNTY OF
JEFFERSON
I 64-CEDAR GROVE TERRACE TO 13TH STREET
LOUISVILLE-LEXINGTON
ROAD S.P. 56-273-111L
STATION 146+90 **PROJECT NO.** I 64-2(34)1

BRIDGE NUMBER — DRAWING NO. 17123 — INDEX

END BENT RA

DESIGNED BY PMJE — CHECKED BY TIG — DATE 1-65 — REVISED — DATE
DETAILED BY PMJE — CHECKED BY — DATE — REVISED — DATE
TRACED BY — CHECKED BY — DATE — REVISED — DATE

BRIDGE

FED. ROAD DIST.	STATE	FED. AID PROJ. NO.	FISCAL YEAR	SHEET NO.	TOTAL SHEETS
7	KY.				

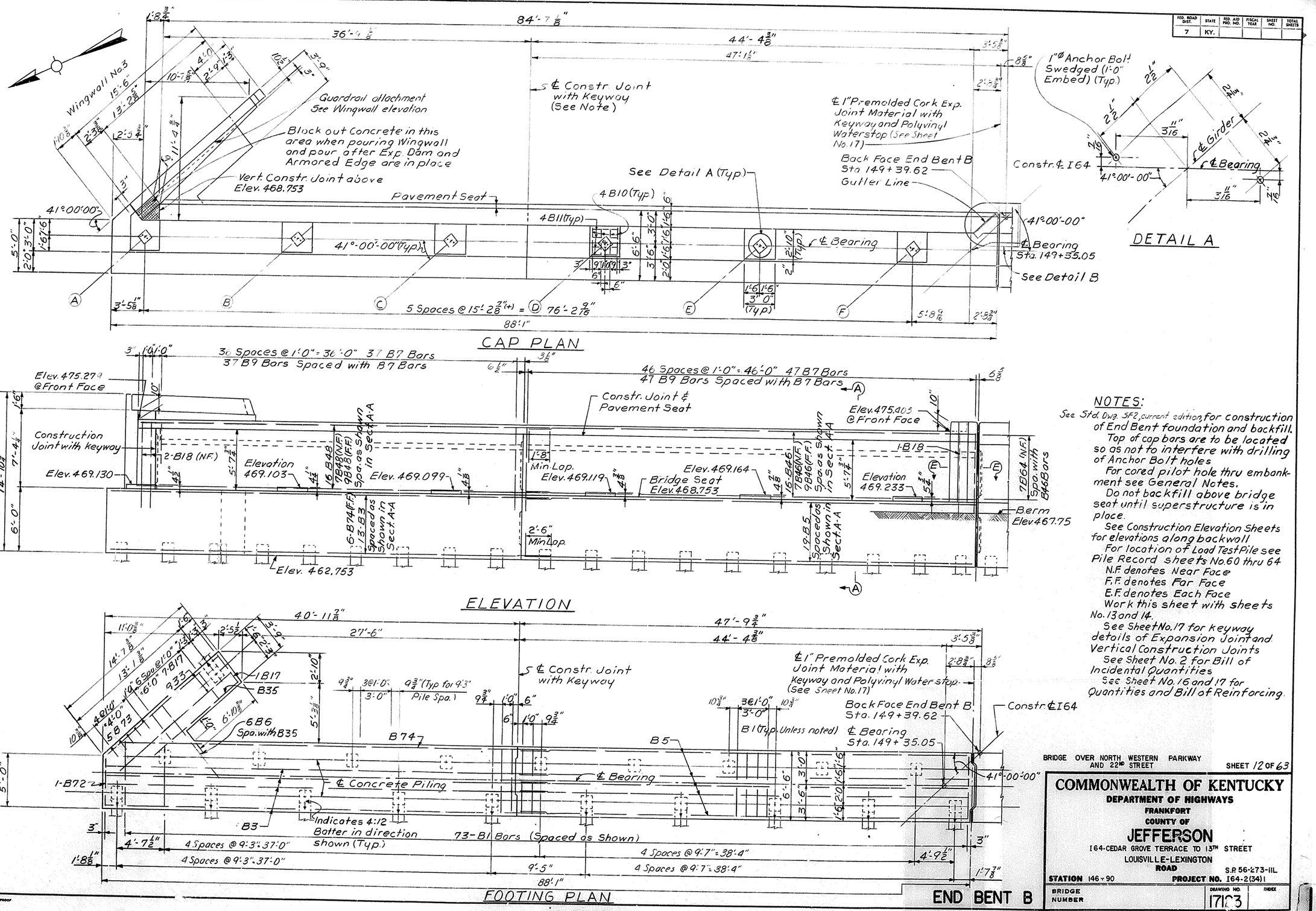

NOTES:

See Std. Dwg. SF2, current edition, for construction of End Bent foundation and backfill.

Top of cap bars are to be located so as not to interfere with drilling of Anchor Bolt holes

For cored pilot hole thru embankment see General Notes.

Do not backfill above bridge seat until superstructure is in place.

See Construction Elevation Sheets for elevations along backwall

For location of Load Test Pile see Pile Record sheets No. 60 thru 64

N.F. denotes Near Face

F.F. denotes Far Face

E.F. denotes Each Face

Work this sheet with sheets No. 13 and 14.

See Sheet No. 17 for keyway details of Expansion Joint and Vertical Construction Joints

See Sheet No. 2 for Bill of Incidental Quantities

See Sheet No. 16 and 17 for Quantities and Bill of Reinforcing.

BRIDGE OVER NORTH WESTERN PARKWAY AND 22ND STREET

SHEET 12 OF 63

COMMONWEALTH OF KENTUCKY
DEPARTMENT OF HIGHWAYS
FRANKFORT
COUNTY OF
JEFFERSON

I64-CEDAR GROVE TERRACE TO 13TH STREET
LOUISVILLE-LEXINGTON ROAD

S.P. 56-273-111L

STATION 146+90 PROJECT NO. I64-2(34)1

BRIDGE NUMBER | DRAWING NO. 17103 | INDEX

DESIGNED BY MDC 3-23-66 CHECKED BY TIG & RCW
DETAILED BY CHECKED BY
TRACED BY CHECKED BY
REVISED DATE REVISED DATE REVISED DATE

FED. ROAD DIST.	STATE	FED. AID PROJ. NO.	FISCAL YEAR	SHEET NO.	TOTAL SHEETS
7	KY.				

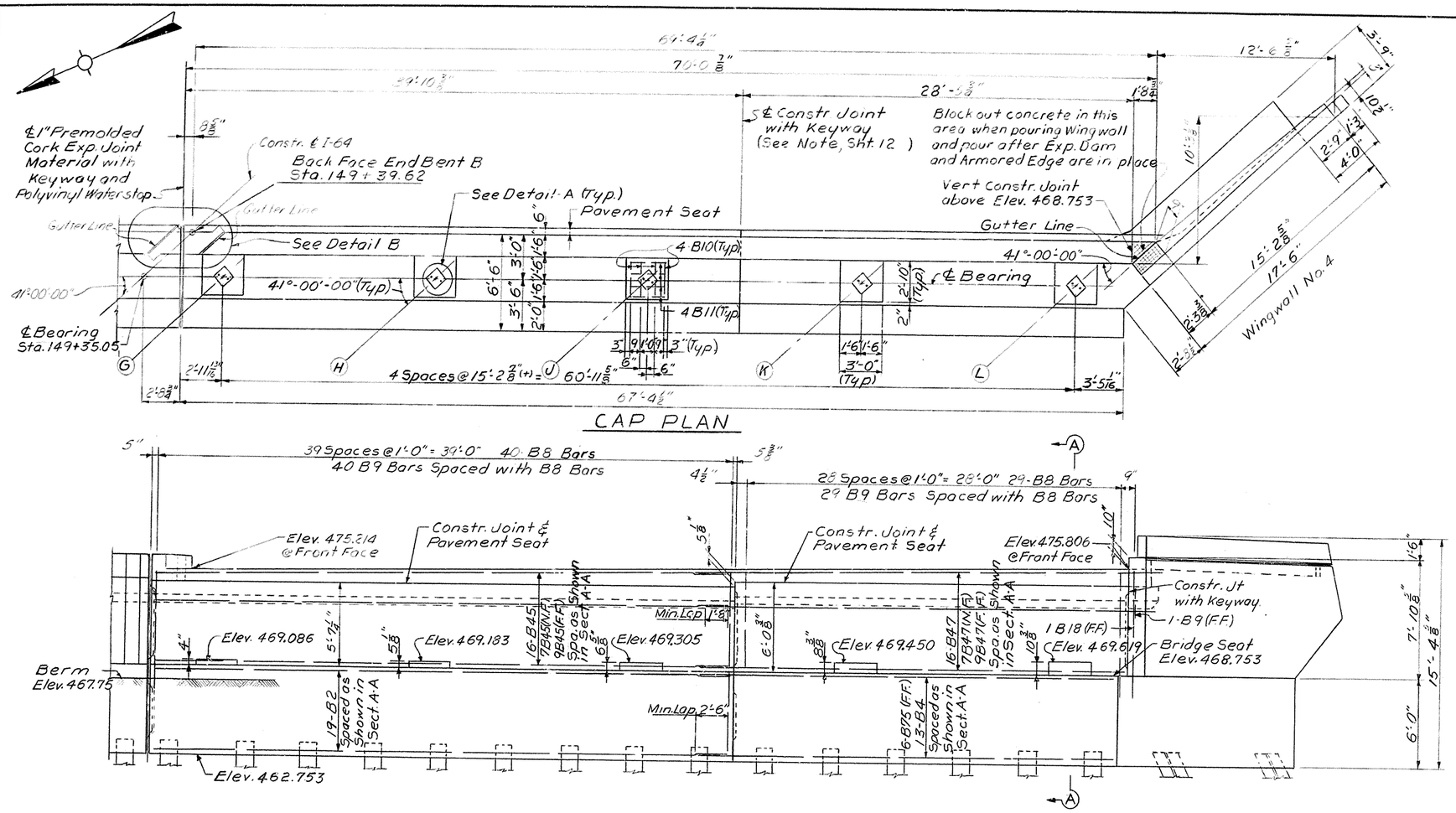

See Sheet No. 12 for notes
Work this sheet with Sheets No. 12 & 14

BRIDGE OVER NORTH WESTERN PARKWAY AND 22ND STREET

SHEET 13 OF 63

COMMONWEALTH OF KENTUCKY
DEPARTMENT OF HIGHWAYS
FRANKFORT
COUNTY OF
JEFFERSON
164-CEDAR GROVE TERRACE TO 13TH STREET
LOUISVILLE-LEXINGTON ROAD

STATION 146+90 PROJECT NO. 164-2(34)1 S.P. 56-273-1IL

BRIDGE NUMBER | DRAWING NO. 17123 | INDEX

DATE	REVISED	DATE	REVISED	DATE	REVISED

DESIGNED BY MDC 3-25-66 CHECKED BY
DETAILED BY T.L.S. 4-26-66 CHECKED BY
TRACED BY CHECKED BY

BRIDGE

FED. ROAD DIST.	STATE	FED. AID PRO. NO.	FISCAL YEAR	SHEET NO.	TOTAL SHEETS
7	KY.				

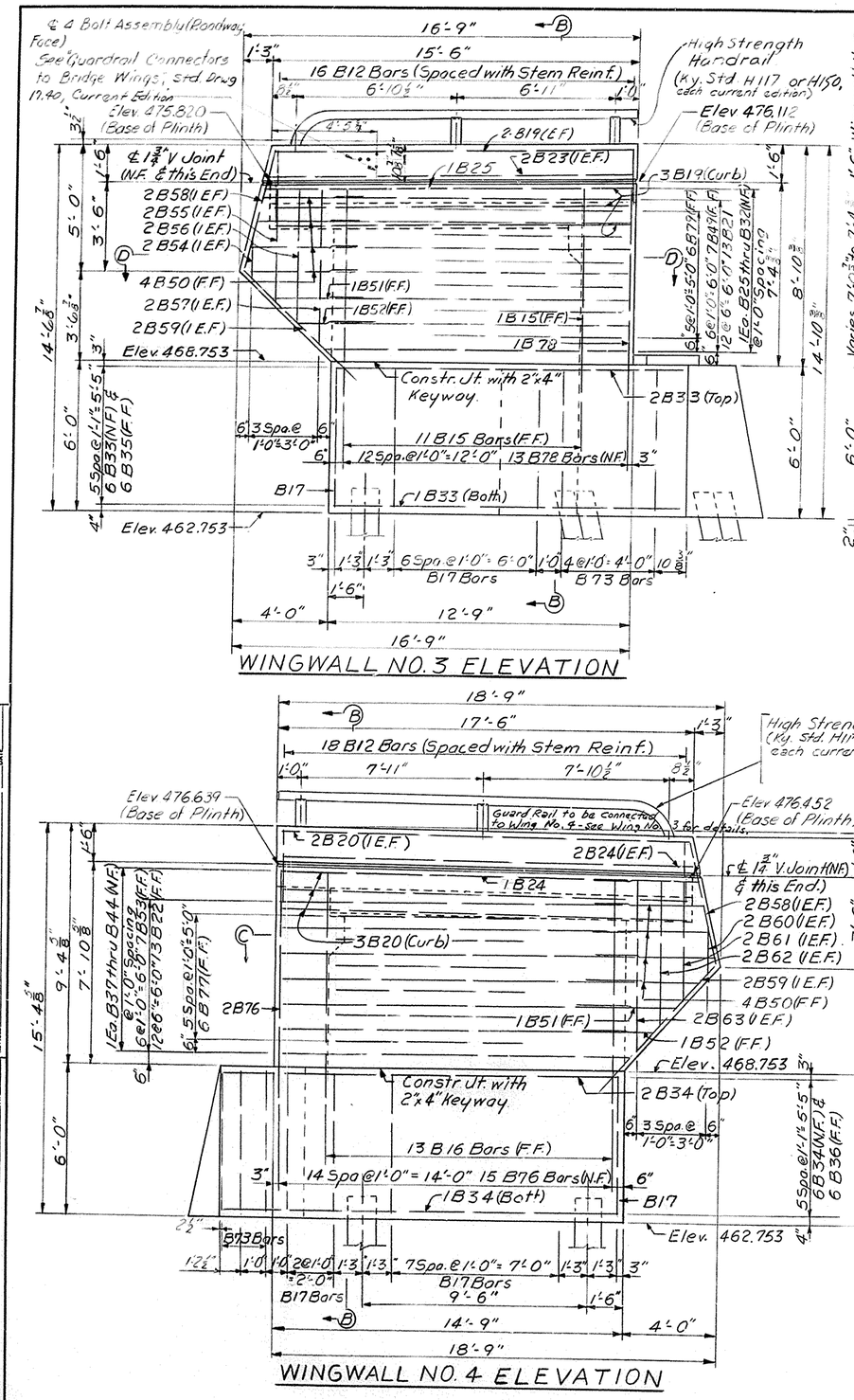

FED. ROAD DIST.	STATE	FED. AID PROJ. NO.	FISCAL YEAR	SHEET NO.	TOTAL SHEETS
7	KY.				

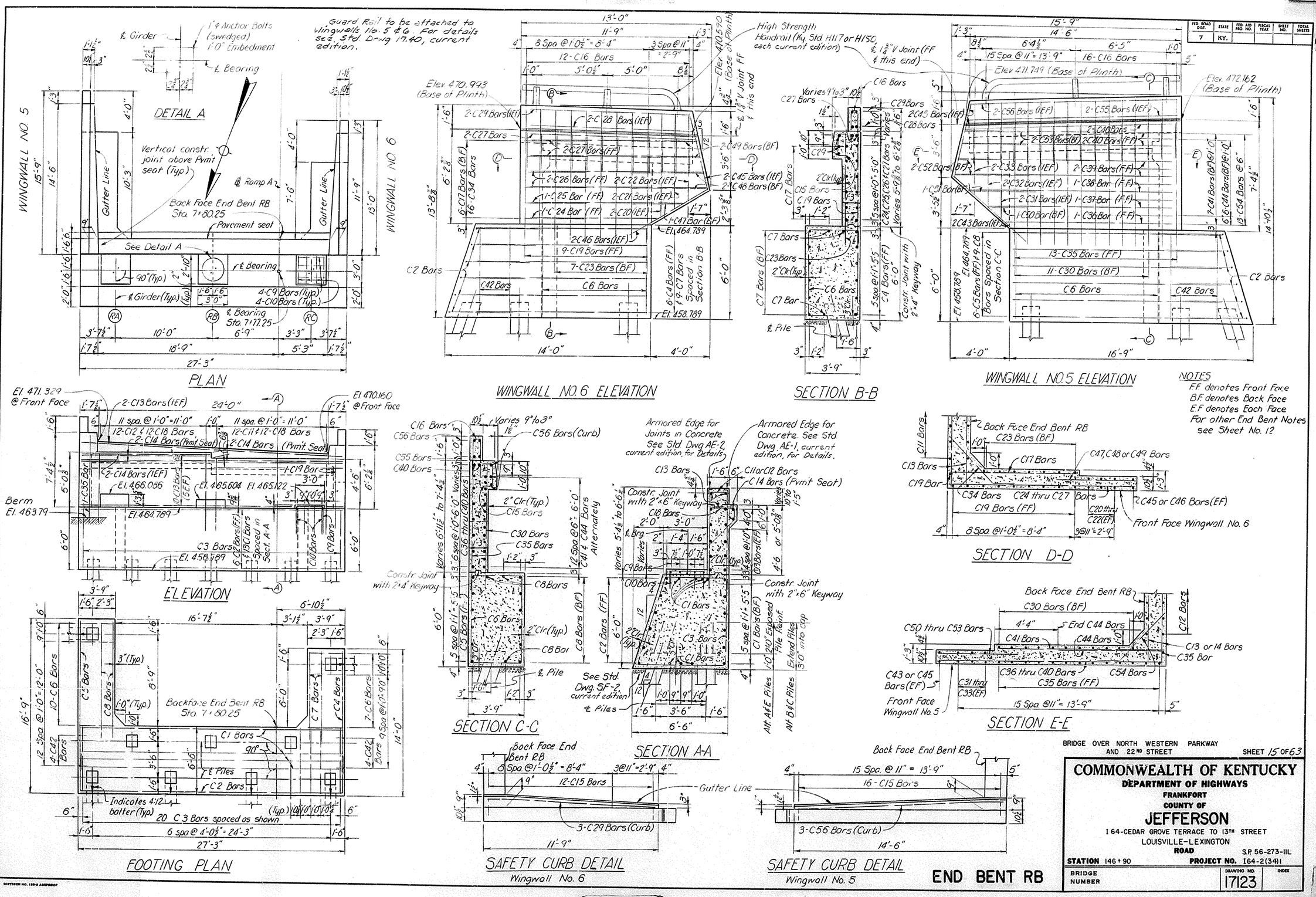

NOTES
FF denotes Front Face
BF denotes Back Face
EF denotes Each Face
For other End Bent Notes see Sheet No. 12

END BENT RB

BRIDGE OVER NORTH WESTERN PARKWAY AND 22ND STREET

SHEET 15 OF 63

COMMONWEALTH OF KENTUCKY
DEPARTMENT OF HIGHWAYS
FRANKFORT
COUNTY OF
JEFFERSON
I 64-CEDAR GROVE TERRACE TO 13TH STREET
LOUISVILLE-LEXINGTON
ROAD

STATION 146+90 **PROJECT NO.** 164-2(34)1 S.P. 56-273-IIL

BRIDGE NUMBER | DRAWING NO. 17123 | INDEX

DESIGNED BY DMH 1-31-66 CHECKED BY TIG 8-26-66
DETAILED BY DATE REVISED
TRACED BY CHECKED BY

BILL OF REINFORCEMENT — END BENTS

FED. ROAD DIST.	STATE	FED. AID PRO. NO.	FISCAL YEAR	SHEET NO.	TOTAL SHEETS
7	KY.				

END BENT A

MARK	TYPE	SIZE	LENGTH	NO OF BARS	LOCATION
A1	30	5	13'-7"	61	Footing
A2	30	5	14'-1"	75	
A3	31	5	14-11	75	
A4	31	5	14-1	61	Footing
A5	17	6	17'-2"	155	Back Wall
A6	16	5	4'-6"	160	Back Wall
A7	Str	6	36'-0"	21	Footing
A8	29	6	9'-4"	6	Footing
A9	24	4	4'-0"	7	Back Wall
A10	Str	6	33'-6"	1	Footing
A11		6	35'-6"	4	
A12		6	38'-6"	10	
A13		6	36'-6"	6	
A14		6	8'-9"	12	Footing
A15		4	36'-4"	14	Back Wall
A16		4	36'-0"	14	Back Wall
A17		6	43'-8"	14	Footing
A18		6	42'-9"	7	Footing
A19	Str	6	8'-6"	7	Footing
A20	17	4	5'-8"	52	Brg Block
A21	17	4	5'-5"	52	Brg Block
A22	Str	6	45'-6"	16	Footing
A23		6	42'-6"	5	Footing
A24		4	41'-4"	14	Back Wall
A25		4	44'-9"	14	Back Wall
A26		7	8'-9"	6	Wing Wall #1
A27		4	12'-0"	2	Back Wall
A28		4	9'-8"	24	
A29		4	12'-8"	2	
A30	Str.	4	6'-2"	2	
A31	29	4	7'-3"	2	Back Wall
A32	32	5	22'-7"	1	Footing
A33	17	5	10'-0"	3	Footing
A34	23	5	21'-10"	10	Footing
A35	24	4	14'-6"	1	Wing Wall #1
A36		4	15'-8"	1	
A37		4	16'-9"	1	
A38		4	17'-10"	1	
A39		4	18'-3"	1	
A40		4	18'-0"	1	
A41		4	17'-9"	1	
A42	24	4	17'-7"	1	
A43	Str	7	12'-10"	7	
A44		4	2'-9"	1	
A45		4	3'-11"	1	
A46		4	5'-0"	1	
A47		4	5'-5"	1	
A48		4	5'-2"	1	
A49		4	4'-11"	1	
A50		4	8'-3"	15	
A51		4	6'-6"	2	
A52		4	5'-6	2	
A53		4	4'-7"	2	
A54	Str.	4	2'-6"	2	
A55	29	7	4'-9"	14	
A56	17	4	2'-10"	17	
A57	17	4	5'-5"	16	
A58	Str.	4	15'-8"	3	
A59	Str.	4	16'-0"	3	Wing Wall #1
A60	17	4	6'-2"	1	Back Wall

END BENT A

MARK	TYPE	SIZE	LENGTH	NO OF BARS	LOCATION
A61	17	4	5'-5	6	Back Wall
A62	Str.	7	14'-1"	17	Footing
A63	Str.	4	2'-4"	2	Back Wall
A64		4	1'-11"	2	
A65		4	8'-4"	1	
A66		4	1'-8"	1	
A67	Not Used				
A68	24	4	2'-11"	1	
A69	17	4	8'-5	5	
A70	17	4	6'-11"	3	
A71	29	4	5'-7"	6	Back Wall
A72	Str	4	4'-10"	2	Wing Wall #1
A73		4	7'-6"	2	Wing Wall #1
A74		4	3'-6"	3	Back Wall
A75		4	3'-3	2	
A76	Str.	4	4'-7"	3	
A77	17	4	6'-5"	6	Back Wall
A78	Str	6	8'-8"	12	Wing Wall #1
A79	Str.	4	15'-8"	2	Wing Wall #1
A80	17	6	19'-10"	3	Back Wall
A81	Str	4	6'-0"	13	
A82	Str.	4	9'-4"	5	
A83	24	4	7'-0"	7	
A84	17	6	16'-6"	3	Back Wall

END BENT B

MARK	TYPE	SIZE	LENGTH	NO OF BARS	LOCATION
B1	32	5	22'-10"	131	Footing
B2	Str	6	39'-6"	19	
B3		6	43'-8	13	
B4		6	30'-6	13	
B5		6	46'-9	19	
B6	Str	6	8'-0"	6	Footing
B7	17	6	17'-0"	84	Back Wall
B8	17	6	17'-10"	84	Back Wall
B9	16	5	4'-1"	154	Back Wall
B10	17	4	6'-5"	44	Brg. Block
B11	17	4	6'-8"	44	Brg Block
B12	17	4	6'-1	34	Wing Wall #3&4
B13	Not Used				
B14	17	4	2'-10"	34	Wing Wall #3&4
B15	Str	6	8'-10"	12	Wing Wall #3
B16	Str.	6	9'-4"	13	Wing Wall #4
B17	23	5	19'-0"	20	Footing
B18	Str.	6	8'-4"	4	Back Wall
B19	Str	4	15'-2"	5	Wing Wall #3
B20	Str.	4	17'-2"	5	Wing Wall #4
B21	24	6	4'-3"	13	Wing Wall #3
B22	Str.	7	5'-3"	13	Wing Wall #4
B23	Str.	4	15'-6"	3	Wing Wall #3
B24	Str.	4	17'-6"	3	Wing Wall #4
B25	24	4	14'-5	1	Wing Wall #3
B26		4	15'-6"	1	
B27		4	16'-7"	1	
B28		4	17'-9"	1	
B29		4	17'-7"	1	
B30		4	17'-4"	1	
B31		4	17'-2"	1	
B32	24	4	16'-11"	1	Wing Wall #3
B33	Str.	6	14'-1"	9	Footing
B34	Str.	6	17'-9"	9	Footing
B35	Str.	6	9'-6"	6	Footing

END BENT B

MARK	TYPE	SIZE	LENGTH	NO OF BARS	LOCATION
B36	Str	6	19'-3"	6	Footing
B37	24	4	17'-8"	1	Wing Wall #4
B38		4	18'-8"	1	
B39		4	19'-8"	1	
B40		4	20'-8"	1	
B41		4	21'-1"	1	
B42		4	20'-10"	1	
B43		4	20'-7"	1	
B44	24	4	20'-4"	1	Wing Wall #4
B45	Str	4	39'-6"	16	Back Wall
B46		4	46'-4"	16	
B47		4	33'-0"	16	
B48		4	40'-5"	16	Back Wall
B49		6	12'-0"	7	Wing Wall #3
B50		4	5'-3"	8	Wing Wall #3&#4
B51		4	3'-9"	2	Wing Wall #3&#4
B52		4	2'-9"	2	Wing Wall #3&#4
B53		7	12'-6	7	Wing Wall #4
B54		4	1'-8"	2	Wing Wall #3
B55		4	4'-6"	2	
B56		4	5'-4"	2	
B57		4	6'-4	2	Wing Wall #3
B58		4	5'-0"	4	Wing Wall #3&#4
B59		4	7'-0	4	Wing Wall #3&#4
B60		4	2'-0"	2	Wing Wall #4
B61		4	4'-10	2	
B62		4	5'-10	2	
B63	Str.	4	6'-10"	2	Wing Wall #4
B64	24	4	4'-6	7	Back Wall
B65	24	4	3'-3"	1	
B66	Str	4	2'-9"	2	
B67	Str.	4	1'-8"	1	
B68	Str.	4	2'-2"	2	
B69	17	4	4'-4"	6	
B70	Not Used				
B71	17	4	5'-2"	2	Back Wall
B72	32	5	19'-10	1	Footing
B73	17	5	5'-7	8	
B74	Str.	6	42'-0"	6	
B75		6	32'-6"	6	Footing
B76		4	8'-10	17	Wing Wall #4
B77		7	8'-0"	6	Wing Wall #4
B78		4	8'-4"	14	Wing Wall #3
B79	Str.	6	7'-10"	6	Wing Wall #3

END BENT RA

MARK	TYPE	SIZE	LENGTH	NO OF BARS	LOCATION
V1	Str.	6	26'-9"	13	Footing
V2	Str.	6	36'-3"	19	Footing
V3	Str.	4	14'-11"	2	Back Wall
V4	32	5	22'-9"	50	Footing
V5	17	6	16'-10"	46	Back Wall
V6	17	4	6'-8"	12	Brg Block
V7	17	4	6'-5"	12	Brg. Block
V8	16	5	4'-7"	46	Backwall
V9	Str	4	31'-2"	14	
V10	Str.	4	35'-6"	14	
V11	17	6	19'-8"	18	
V12	Str.	4	17'-2"	1	
V13	17	4	5'-4"	4	Back Wall
V14	17	4	6'-11"	15	Wing Wall #2
V15	Str.	4	15'-5"	6	Wing Wall #2

END BENT RA

MARK	TYPE	SIZE	LENGTH	NO OF BARS	LOCATION
V16	24	4	6'-0"	7	Back Wall
V17	Str.	4	10'-8"	3	
V18	17	4	8'-5"	3	
V19	Str	4	2'-4"	2	Back Wall
V20	23	5	19'-0"	14	Footing
V21	Str	6	19'-2"	6	
V22		6	20'-5"	9	Footing
V23		4	7'-1	17	Wing Wall #2
V24		6	7'-7	12	
V25		4	3'-9"	2	
V26		4	4'-4"	2	
V27		4	4'-11"	2	
V28		4	4'-11"	2	
V29	Str.	4	6'-6"	2	
V30	24	4	16'-7"	1	
V31		4	18'-4"	1	
V32		4	19'-11"	1	
V33		4	20'-3"	1	
V34		4	20'-1"	1	
V35		4	19'-10"	1	
V36	24	4	19'-8"	1	
V37	Str	4	3'-0	1	
V38		4	2'-8"	1	
V39		4	4'-10"	1	
V40		4	4'-8"	1	
V41		4	4'-6"	1	
V42	Str.	6	6'-9"	2	
V43	17	4	5'-5"	19	
V44	Str	4	17'-8"	2	
V45	Str	4	18'-0"	3	Wing Wall #2
V46	29	7	6'-0"	12	Back Wall
V47	Str.	4	17'-8	3	Wing Wall #2
V48	17	4	2'-10"	19	Wing Wall #2
V49	Str.	6	28'-9	6	Footing
V50	17	5	7'-7"	2	Footing
V51	Str	4	9'-8"	4	Back Wall
V52		4	12'-3"	2	
V53		4	18'-6"	1	
V54	Str	4	2'-9"	2	
V55	24	4	4'-4"	3	Back Wall
V56	Str	7	13'-6"	6	Wing Wall #2
V57	Str	7	9'-4"	6	Wing Wall #2

END BENT RB

MARK	TYPE	SIZE	LENGTH	NO OF BARS	LOCATION
C1	Str.	6	26'-11"	13	Footing
C2	17	6	35'-11"	6	
C3	32	5	22'-9"	20	
C4	Str.	6	11'-9"	6	
C5	Str.	6	14'-6"	6	
C6	23	5	19'-0"	17	
C7	Str	6	11'-0"	9	
C8	Str	6	13'-9"	9	Footing
C9	17	4	7'-2"	12	Brg Block
C10		4	6'-11"	12	Brg Block
C11		6	15'-6"	12	Back Wall
C12	17	6	16'-8"	12	
C13	Str	4	26'-11"	12	
C14	Str	4	13'-3"	6	Back Wall

END BENT RB

MARK	TYPE	SIZE	LENGTH	NO OF BARS	LOCATION
C15	17	4	2'-10	28	Wing Wall #5&#6
C16	17	4	5'-5"	28	Wing Wall #5&#6
C17	Str	7	8'-8	6	Wing Wall #6
C18	16	5	4'-1"	24	Back Wall
C19	Str	4	7'-3"	10	Wing Wall #6
C20		4	5'-1	2	
C21		4	4'-6"	2	
C22		4	4'-0"	2	
C23		6	7'-8"	7	
C24		4	8'-10"	1	
C25		4	10'-8"	1	
C26		4	12'-8"	2	
C27		4	11'-10"	4	
C28		4	11'-9"	2	
C29		4	11'-5"	5	Wing Wall #6
C30		6	8'-10"	11	Wing Wall #5
C31		4	6'-0	2	
C32		4	5'-2	2	
C33	Str.	4	4'-4"	2	Wing Wall #5
C34	29	7	5'-8"	6	Wing Wall #6
C35	Str.	4	8'-4"	14	Wing Wall #5
C36		4	11'-10	1	
C37		4	13'-0"	1	
C38		4	14'-3	1	
C39		4	15'-2"	2	
C40		4	14'-8"	4	
C41	Str.	6	11'-5"	7	Wing Wall #5
C42	17	5	7'-7"	8	Footing
C43	Str.	4	6'-6"	2	Wing Wall #5
C44		6	7'-3"	6	Wing Wall #5
C45		4	5'-0"	4	Wing Wall #5&#6
C46		4	6'-0"	2	Wing Wall #6
C47		4	3'-8"	1	
C48		4	5'-4"	2	
C49		4	4'-9"	2	Wing Wall #6
C50		4	3'-0"	1	Wing Wall #5
C51		4	4'-3"	1	
C52		4	5'-3"	2	
C53	Str	4	4'-9"	2	
C54	29	6	5'-8"	13	
C55	Str.	4	14'-6"	2	
C56	Str.	4	14'-2"	5	Wing Wall #5

DESIGNED BY AJE CHECKED BY
DETAILED BY DMH CHECKED BY
TRACED BY CHECKED BY

DATE REVISED
DATE 4-66 REVISED
DATE REVISED

BRIDGE OVER NORTH WESTERN PARKWAY AND 22ND STREET

SHEET 16 OF 63

COMMONWEALTH OF KENTUCKY
DEPARTMENT OF HIGHWAYS
FRANKFORT
COUNTY OF
JEFFERSON
I 64-CEDAR GROVE TERRACE TO 13TH STREET
LOUISVILLE-LEXINGTON
ROAD

STATION 146+90 **PROJECT NO.** I 64-2(34)1 S.P. 56-273-IIL

BRIDGE NUMBER

DRAWING NO. 17123

INDEX

END BENTS

FED. ROAD DIST.	STATE	FED. AID PRO. NO.	FISCAL YEAR	SHEET NO.	TOTAL SHEETS
7	KY.				

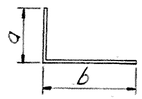

TYPE 24

Mark	a Ft.	a in.	b Ft.	b in.
A 9	2	0	2	0
A 35	1	6	13	0
A 36	1	6	14	2
A 37	1	6	15	3
A 38	1	6	16	4
A 39	1	6	16	9
A 40	1	6	16	6
A 41	1	6	16	3
A 42	1	6	16	1
A 68	1	3	1	8
A 83	2	6	4	6
B 21	1	6	2	9
B 25	1	5	13	0
B 26	1	5	14	1
B 27	1	5	15	2
B 28	1	5	16	4
B 29	1	5	16	2
B 30	1	5	15	11
B 31	1	5	15	9
B 32	1	5	15	6
B 37	2	10	14	10
B 38	2	10	15	10
B 39	2	10	16	10
B 40	2	10	17	10
B 41	2	10	18	3
B 42	2	10	18	0
B 43	2	10	17	9
B 44	2	10	17	6
B 64	2	3	2	3
B 65	1	3	2	0
V 16	2	6	3	6
V 30	1	6	15	1
V 31	1	6	16	10
V 32	1	6	13	5
V 33	1	6	18	9
V 34	1	6	18	7
V 35	1	6	18	4
V 36	1	6	18	2
V 55	2	0	2	4

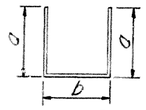

TYPE 17

Mark	a Ft.	a in.	b Ft.	b in.
A 5	8	0	1	2
A 20	1	6	2	8
A 21	1	6	2	5
A 33	1	6	7	0
A 57	2	5	0	6½
A 60	2	6	1	2
A 61	2	6	0	4½
A 56	0	8	1	6
A 69	3	11	0	6½
A 70	3	2	0	6½
A 77	2	6	1	5
A 80	9	4	1	2
A 84	7	8	1	2
B 7	7	11	1	2
B 8	8	4	1	2
B 10	2	0	2	5
B 11	2	0	2	8
B 12	2	9	0	6½
B 14	0	8	1	6
B 69	2	0	0	3½
B 71	2	0	1	2
B 73	1	0	5	7
V 5	7	10	1	2
V 6	2	0	2	8
V 7	2	0	2	5
V 11	9	3	1	2
V 13	2	6	0	3½
V 14	3	2	0	6½
V 18	3	11	0	6½
V 43	2	5	0	6½
V 48	0	8	1	6
V 50	1	0	5	7
C 2	4	6	26	11
C 9	2	3	2	8
C 10	2	3	2	5
C 11	7	2	1	2
C 12	7	9	1	2
C 16	2	5	0	6½
C 42	1	0	5	7
C 15	0	8	1	6

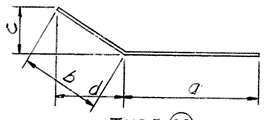

TYPE 29

Mark	a Ft.	a in.	b Ft.	b in.	c Ft.	c in.	d Ft.	d in.
A 8	6	2	3	2	1	0½	2	11¾
A 31	3	4	3	11	1	3½	3	8
A 55	3	3	1	6	0	11	1	2¼
A 71	3	4	2	3	0	10¾	2	0¾
V 46	3	0	3	0	1	7¼	2	6½
C 34	4	2	1	6	1	0¾	1	0¾
C 54	4	2	1	6	1	0¾	1	0¾

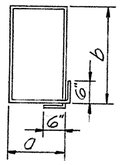

TYPE 23

Mark	a Ft.	a in.	b Ft.	b in.
A 34	3	5	7	0
B 17	3	5	5	7
V 20	3	5	5	7
C 6	3	5	5	7

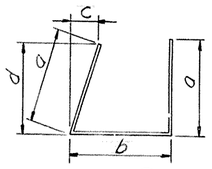

TYPE 30

Mark	a Ft.	a in.	b Ft.	b in.	c Ft.	c in.	d Ft.	d in.
A 1	3	9	6	1	1	2¼	3	6¾
A 2	4	0	6	1	1	2	3	10

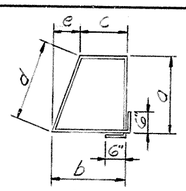

TYPE 32

Mark	a Ft.	a in.	b Ft.	b in.	c Ft.	c in.	d Ft.	d in.	e Ft.	e in.
A 32	7	0	4	8	2	9½	7	3½	1	10½
B 1	5	7	6	1	4	2½	5	10¾	1	10½
B 72	5	7	4	7¼	2	8½	5	10¾	1	10¾
V 4	5	7	6	1	4	2½	5	10¾	1	10½
C 3	5	7	6	1	4	2½	5	10¾	1	10½

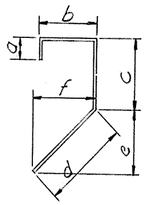

TYPE 16

Mark	a Ft.	a in.	b Ft.	b in.	c Ft.	c in.	d Ft.	d in.	e Ft.	e in.	f Ft.	f in.
A 6	0	6	1	8	0	8	1	8	1	2	1	2
B 9	0	0	1	8	0	8	1	8	1	2	1	2
V 8	0	6	1	8	0	9	1	8	1	2	1	2
C 18	0	0	1	8	0	9	1	8	1	2	1	2

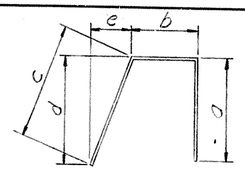

TYPE 31

Mark	a Ft.	a in.	b Ft.	b in.	c Ft.	c in.	d Ft.	d in.	e Ft.	e in.
A 3	5	3	4	2½	5	5	5	2¾	1	4½
A 4	4	9	4	2½	5	1	4	10½	1	5

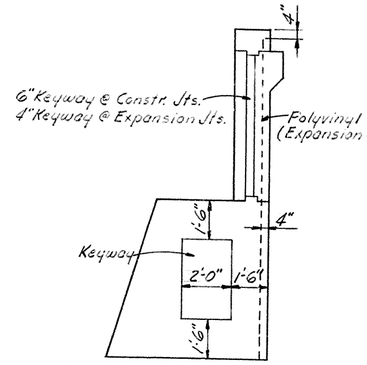

VERTICAL JOINT DETAILS
Typical, except as noted, for Expansion Joints & Construction Joints.

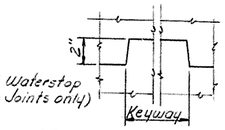

SECTION AT CONSTRUCTION JOINT KEYWAY

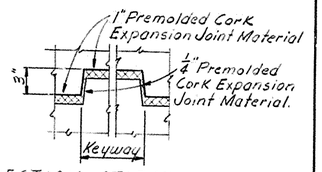

SECTION AT EXPANSION JOINT KEYWAY

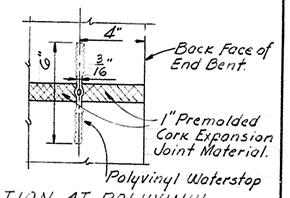

SECTION AT POLYVINYL WATERSTOP

For Material Specifications and notes for Premolded Cork Expansion Joint Material see Kentucky Standard Drawing G354, current edition.

Polyvinyl Waterstop: The Polyvinyl Waterstop shall be manufactured from virgin Polyvinyl Chloride Plastic compound and shall not contain any scrap or reclaimed material. Any necessary splices of the material shall be accomplished in the field by heating the two ends to be spliced until gummy, pressing together across the full width, and allowing to cool. All splices shall be watertight across the full width.

No direct payment will be made for material or installation of Polyvinyl waterstop or Cork Expansion Joint Material. The cost of these items shall be included in the Unit Price Bids for Class AA Concrete.

ESTIMATE OF QUANTITIES

ITEM	UNIT	AMOUNT END BENT A	END BENT B	END BENT RA	END BENT RB	TOTAL
Concrete, Class "A"	Cu. Yds.	237.3	213.0	89.2	49.1	588.6
Concrete, Class "A A"	Cu. Yds.	71.1	75.5	22.3	18.8	197.7
Steel Reinforcement	Lbs.	18,479	17,681	7,699	4,706	48,565
Concrete Piling, Furnishing	Lin. Ft.	1452	1495	558	227	3,732
Concrete Piling, Driven	Lin. Ft.	1452	1495	558	227	3,732
Structure Excavation, Common	Cu. Yds.	660	630	245	175	1,710
End Bent Backfill	Cu. Yds.	215	240	100	85	640
High Strength Handrail	Lin. Ft.	16.0	33.0	18.0	27.0	94.0

BRIDGE OVER NORTH WESTERN PARKWAY AND 22ND STREET

SHEET 17 OF 63

COMMONWEALTH OF KENTUCKY
DEPARTMENT OF HIGHWAYS
FRANKFORT
COUNTY OF
JEFFERSON
I64-CEDAR GROVE TERRACE TO 13TH. STREET
LOUISVILLE-LEXINGTON
ROAD
S.P. 56-273-IIL
STATION 146+90
PROJECT NO. I64-2(34) I
BRIDGE NUMBER
DRAWING NO. 17123
INDEX

END BENTS

DESIGNED BY ... DATE ... REVISED ... DATE ...
DETAILED BY L.M.H. DATE 2-66 CHECKED BY TIG REVISED ... DATE ...
TRACED BY ... DATE ... CHECKED BY ... REVISED ... DATE ...

FED. ROAD DIST.	STATE	FED. AID PRO. NO.	FISCAL YEAR	SHEET NO.	TOTAL SHEETS
7	KY.				

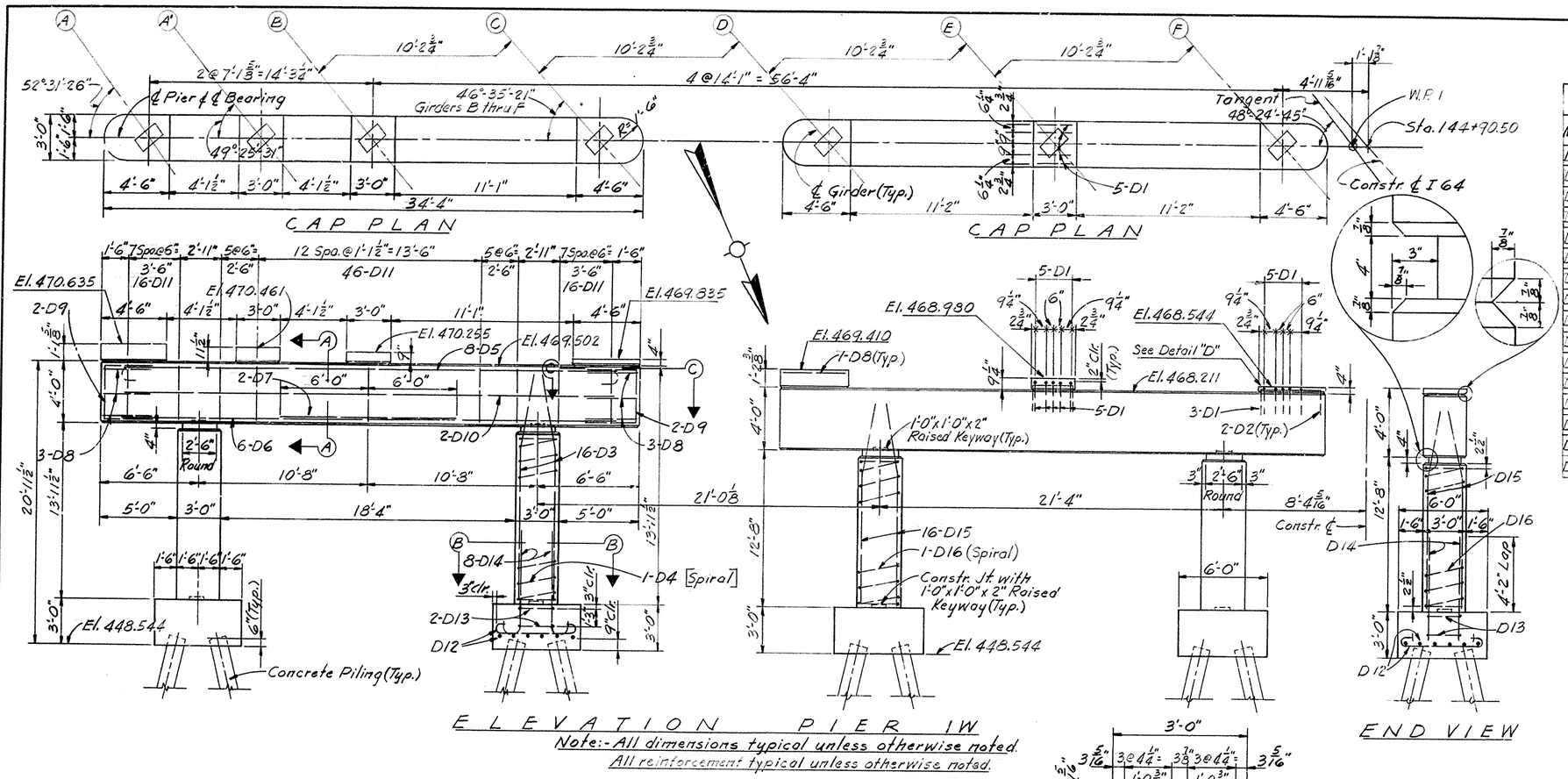

BILL OF REINFORCEMENT

Mark	Type	Size	No.	Length Ft.	Length In.	Location	a Ft.	a In.	b Ft.	b In.	c Ft.	c In.
D1	S10	4	62	7	0	Pad	2	8	2	2		
D2	S10	4	8	8	3	Pad	3	11	2	2		
D3	23	11	32	17	0	Col.	12	6				
D4	T5	4	2	134	4	Col.						
D5	!	11	16	34	6	Cap	31	4	1	0¾	1	2
D6	Str.	11	12	31	4	Cap						
D7	Str.	11	4	11	0	Cap						
D8	10	5	16	9	4	Cap & Pad	2	8	4	0	2	6¾
D9	S10	5	8	10	11	Cap	3	6¾	3	8		
D10	Str.	5	4	31	4	Cap						
D11	T2	5	156	11	7	Cap	1	7¼	3	8		
D12	1	6	48	6	0	Footing	5	6	0	6	0	6
D13	T3	4	8	9	8	Footing						
D14	22	10	32	7	8	Footing.	6	3	0	11¼	1	0½
D15	23	11	32	15	8	Col.	11	2				
D16	T5	4	2	122	3	Col.						

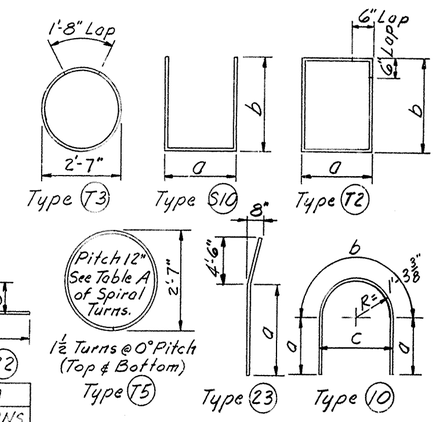

TABLE A	
MARK	TURNS
D4	16½
D16	15

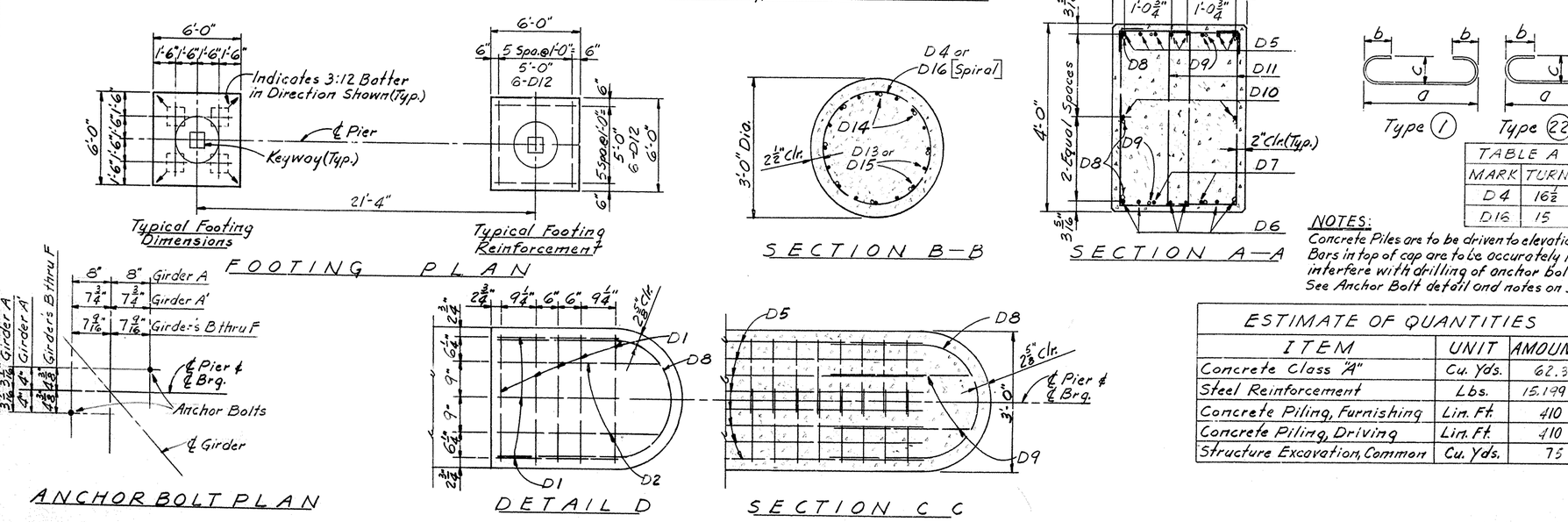

NOTES:
Concrete Piles are to be driven to elevation and bearing capacity shown in General Notes. See Sheet No. 2
Bars in top of cap are to be accurately located in accordance with the plans so that they do not interfere with drilling of anchor bolt holes.
See Anchor Bolt detail and notes on Sheet No. 38

ESTIMATE OF QUANTITIES

ITEM	UNIT	AMOUNT
Concrete Class "A"	Cu. Yds.	62.3
Steel Reinforcement	Lbs.	15.199
Concrete Piling, Furnishing	Lin. Ft.	410
Concrete Piling, Driving	Lin. Ft.	410
Structure Excavation, Common	Cu. Yds.	75

BRIDGE OVER NORTH WESTERN PARKWAY AND 22ND STREET

SHEET 18 OF 63

COMMONWEALTH OF KENTUCKY
DEPARTMENT OF HIGHWAYS
FRANKFORT
COUNTY OF
JEFFERSON

I 64-CEDAR GROVE TERRACE TO 13TH STREET
LOUISVILLE-LEXINGTON ROAD

S.P. 56-273-11L

STATION 146+90 **PROJECT NO.** 164-2(341)

BRIDGE NUMBER

DRAWING NO. 17123

INDEX

PIER 1W

DESIGNED BY: DATE: REVISED:
DETAILED BY: L.M.H. CHECKED BY: R. LIN DATE 3-56 REVISED:
TRACED BY: CHECKED BY: DATE: REVISED:

FED. ROAD DIST.	STATE	FED. AID PROJ. NO.	FISCAL YEAR	SHEET NO.	TOTAL SHEETS
7	KY.				

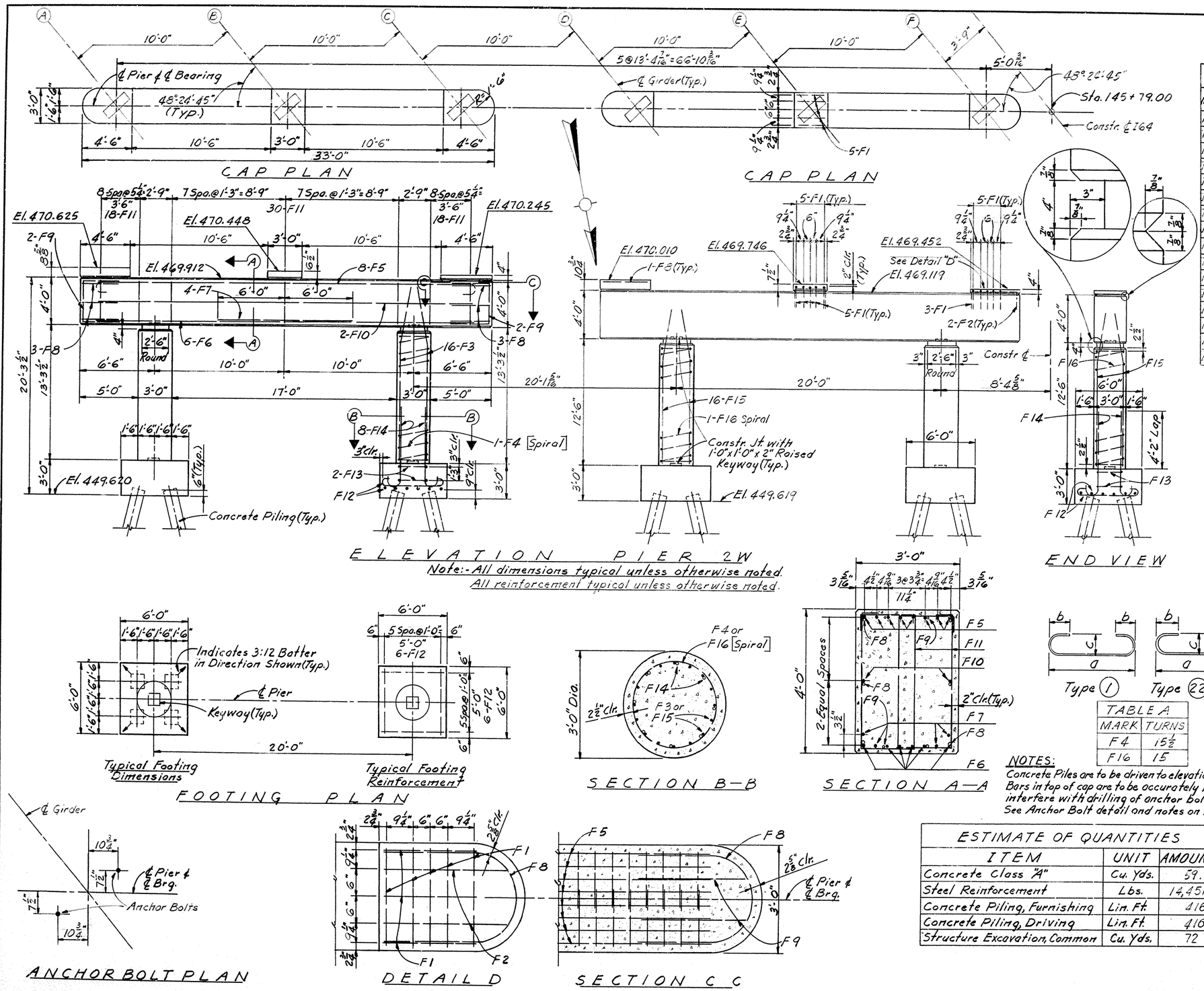

BILL OF REINFORCEMENT

Mark	Type	Size	No.	Length Ft.	Length In.	Location	a Ft.	a In.	b Ft.	b In.	c Ft.	c In.
F1	S10	4	52	6	4	Pad	2	8	1	10		
F2	S10	4	8	7	7	Pad	3	11	1	10		
F3	23	11	32	16	4	Col.	11	10				
F4	T5	4	2	126	2	Col.						
F5	1	11	16	33	2	Cap	30	0	1	0 3/4	1	2
F6	Str.	10	12	30	0	Cap						
F7	Str.	11	8	12	0	Cap						
F8	10	5	16	9	4	Cap & Pad	2	8	4	0	2	6 3/8
F9	S10	5	8	10	11	Cap	3	6 3/4	3	8		
F10	Str.	5	4	30	0	Cap						
F11	T2	5	132	11	7	Cap	1	7 1/4	3	8		
F12	1	6	48	6	10	Footing	5	6	0	6	0	6
F13	T3	4	8	9	8	Footing						
F14	22	10	32	7	8	Footing	6	3	0	11 1/4	1	0 1/2
F15	23	11	32	15	6	Col.	11	0				
F16	T5	4	2	122	1	Col.						

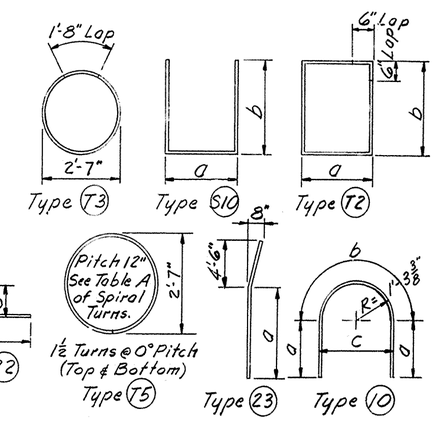

TABLE A	
MARK	TURNS
F4	15½
F16	15

NOTES:
Concrete Piles are to be driven to elevation and bearing capacity shown in General Notes. See Sheet No. 2
Bars in top of cap are to be accurately located in accordance with the plans so that they do not interfere with drilling of anchor bolt holes.
See Anchor Bolt detail and notes on Sheet No. 38

ESTIMATE OF QUANTITIES		
ITEM	UNIT	AMOUNT
Concrete Class "A"	Cu. Yds.	59.6
Steel Reinforcement	Lbs.	14,451
Concrete Piling, Furnishing	Lin. Ft.	416
Concrete Piling, Driving	Lin. Ft.	416
Structure Excavation, Common	Cu. Yds.	72

PIER 2W

BRIDGE OVER NORTH WESTERN PARKWAY AND 22ND STREET

SHEET 19 OF 63

COMMONWEALTH OF KENTUCKY
DEPARTMENT OF HIGHWAYS
FRANKFORT
COUNTY OF
JEFFERSON
I64-CEDAR GROVE TERRACE TO 13TH STREET
LOUISVILLE-LEXINGTON ROAD

S.P. 56-273-IIL

STATION 146+90 PROJECT NO. I64-2(341)

BRIDGE NUMBER

DRAWING NO. 17123

INDEX

DESIGNED BY L.M.H. CHECKED BY R. LIN
DETAILED BY CHECKED BY
TRACED BY CHECKED BY
DATE 3-56 REVISED

FED. ROAD DIST.	STATE	FED. AID PROJ. NO.	FISCAL YEAR	SHEET NO.	TOTAL SHEETS
7	KY.				

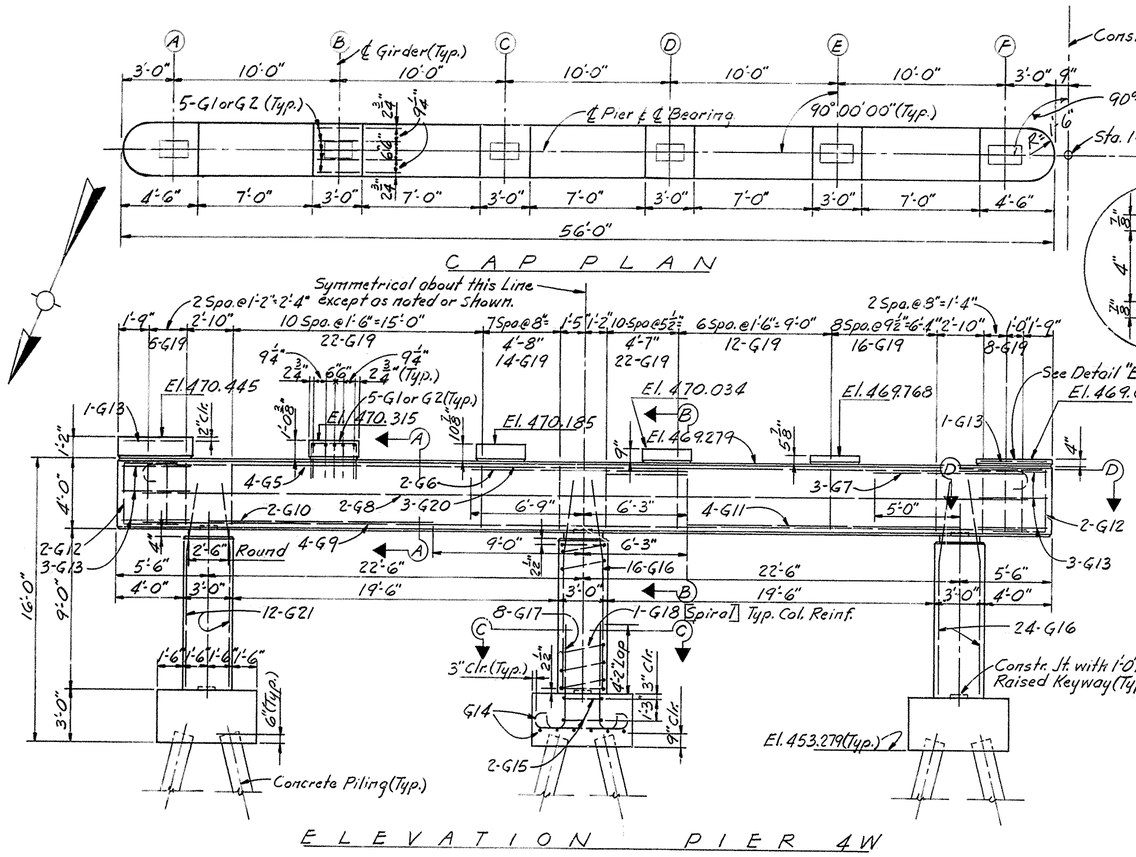

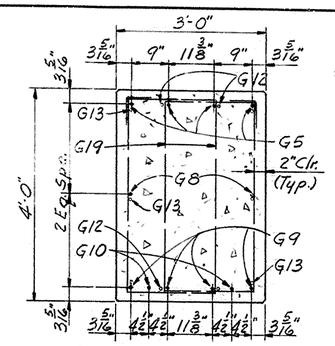

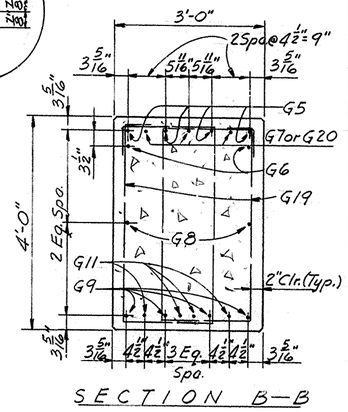

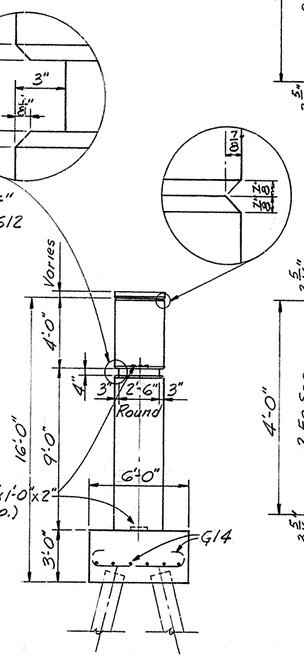

+ G1 & G3 Bars for Pads @ Girders A-B-C.
# G2 & G4 Bars for Pads @ Girders D-E-F.

BILL OF REINFORCEMENT

Mark	Type	Size	No.	Length Ft.	Length In.	Location	a Ft.	a In.	b Ft.	b In.	c Ft.	c In.
+ G1	S10	4	28	6	10	Pad	2	8	2	1		
# G2	S10	4	28	6	0	Pad	2	8	1	8		
+ G3	S10	4	2	8	1	Pad	3	11	2	1		
# G4	S10	4	2	7	3	Pad	3	11	1	8		
G5	1	11	4	56	2	Cap	53	0	1	0¾	1	2
G6	Str.	9	2	13	0	Cap						
G7	22	11	3	10	7	Cap	9	0	1	0¾	1	2
G8	Str.	5	2	53	0	Cap						
G9	Str.	11	4	53	0	Cap						
G10	Str.	11	2	13	6	Cap						
G11	Str.	11	4	16	3	Cap						
G12	S10	5	4	10	11	Cap	3	6¾	3	8		
G13	10	5	8	9	4	Cap & Pad	2	8	4	0	2	6⅞
G14	1	6	36	6	10	Footing	5	6	0	6	0	6
G15	T3	4	6	9	8	Footing						
G16	23	11	40	12	0	Col.	7	6	4	6	0	8
G17	22	10	24	7	8	Col.	6	3	0	11¼	1	0½
G18	T5	4	3	93	6	Col.						
G19	T2	5	98	12	2	Cap	1	11	3	8		
G20	Str.	11	3	13	0	Cap						
G21	23	10	12	11	8	Col.	7	6	4	2	0	7

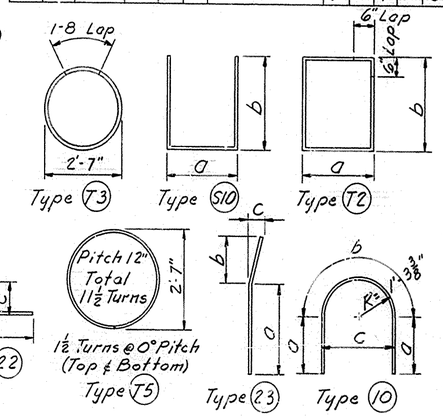

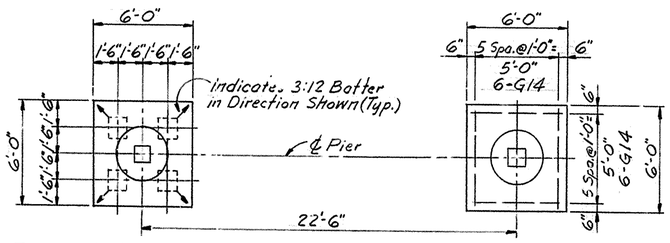

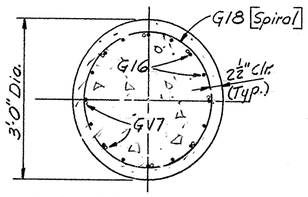

NOTES:

Concrete Piles are to be driven to the elevation and bearing capacity shown in General Notes. See Sheet No. 2

Bars in top of cap are to be accurately located in accordance with the plans so that they do not interfere with drilling of anchor bolt holes. See Anchor Bolt detail and Notes on Sheet No. 3B

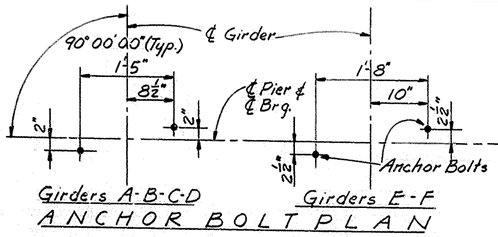

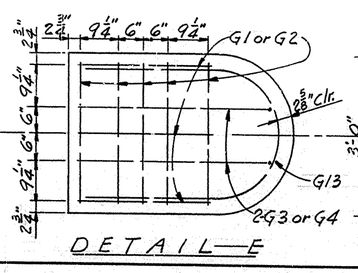

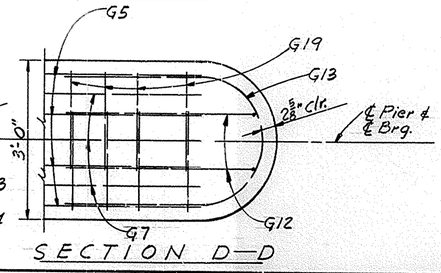

ESTIMATE OF QUANTITIES

ITEM	UNIT	AMOUNT
Concrete Class "A"	Cu. Yds.	45.7
Steel Reinforcement	Lbs.	9,551
Concrete Piling, Furnishing	Lin. Ft.	370
Concrete Piling, Driving	Lin. Ft.	370
Structure Excavation, Common	Cu. Yds.	43

BRIDGE OVER NORTH WESTERN PARKWAY AND 22ND STREET

SHEET 2D OF 63

COMMONWEALTH OF KENTUCKY
DEPARTMENT OF HIGHWAYS
FRANKFORT
COUNTY OF
JEFFERSON
I64-CEDAR GROVE TERRACE TO 13TH STREET
LOUISVILLE-LEXINGTON ROAD

S.P. 56-273-IIL

STATION 146+90 PROJECT NO. 164-2(34)1

BRIDGE NUMBER | DRAWING NO. 17123 | INDEX

PIER 4W

DESIGNED BY L.M.H. CHECKED BY R. LIN DATE 3-68 REVISED
DETAILED BY L.M.H. CHECKED BY DATE REVISED
TRACED BY CHECKED BY DATE REVISED

FED. ROAD DIST.	STATE	FED. AID PRO. NO.	FISCAL YEAR	SHEET NO.	TOTAL SHEETS
7	KY.				

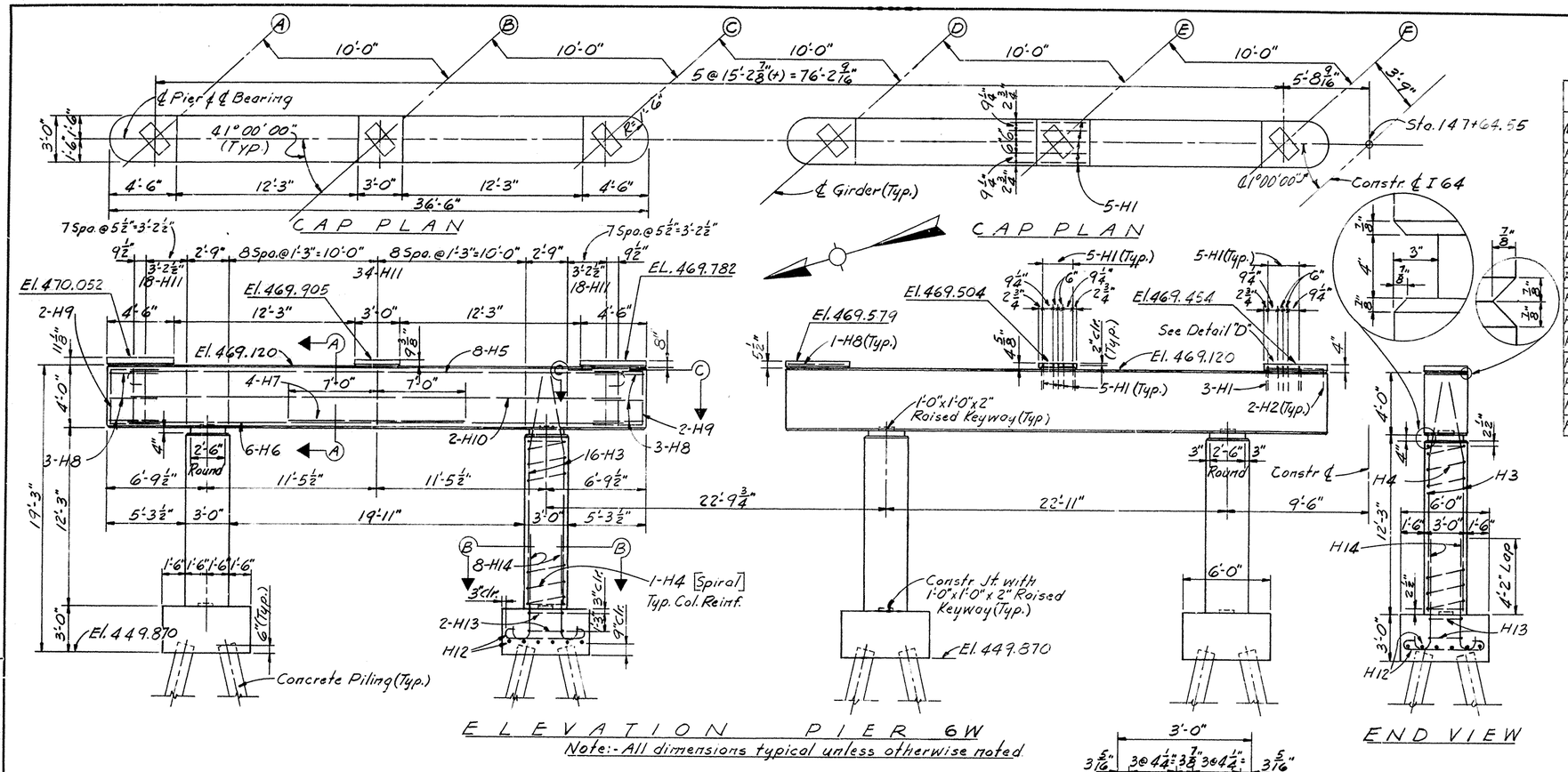

BILL OF REINFORCEMENT

Mark	Type	Size	No.	Length Ft.	Length In.	Location	a Ft.	a In.	b Ft.	b In.	c Ft.	c In.
H1	S10	4	52	6	4	Pad	2	8	1	10		
H2	S10	4	8	7	7	Pad	3	11	1	10		
H3	23	11	64	15	3	Col.	10	9				
H4	T5	4	4	118	0	Col.						
H5	1	11	16	36	8	Cap	33	6	1	0¾	1	2
H6	Str.	10	12	33	6	Cap						
H7	Str.	11	8	14	0	Cap						
H8	10	5	16	9	4	Cap & Pad	2	8	4	0	2	6¾
H9	S10	5	8	10	11	Cap	3	6¾	3	8		
H10	Str.	5	4	33	6	Cap						
H11	T2	5	140	11	7	Cap	1	7½	3	8		
H12	1	6	48	6	10	Footing	5	6	0	6	0	6
H13	T3	4	8	9	8	Footing						
H14	22	10	32	7	8	Col.	6	3	0	11¼	1	0½

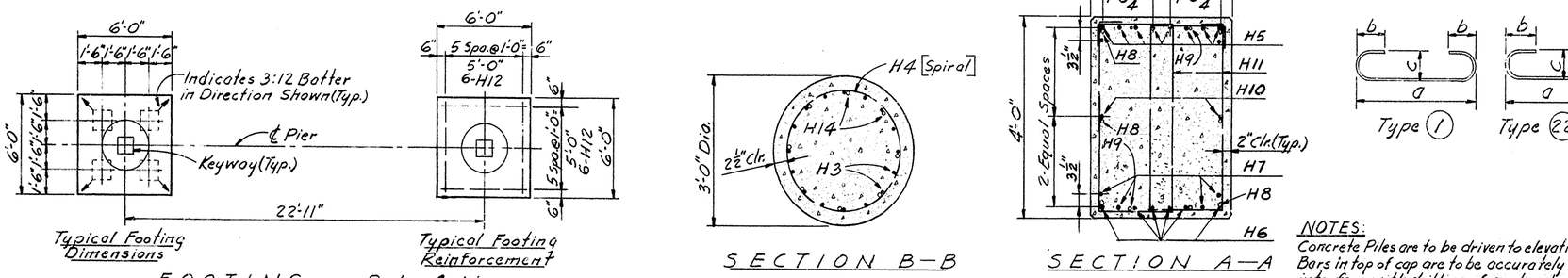

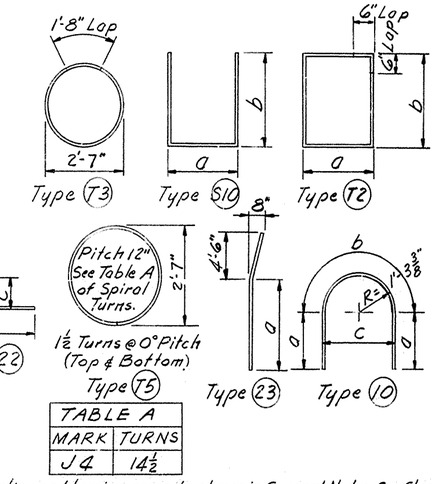

TABLE A	
MARK	TURNS
J4	14½

NOTES:
Concrete Piles are to be driven to elevation and bearing capacity shown in General Notes. See Sheet No. 2
Bars in top of cap are to be accurately located in accordance with the plans so that they do not interfere with drilling of anchor bolt holes.
See Anchor Bolt detail and notes on Sheet No. 38

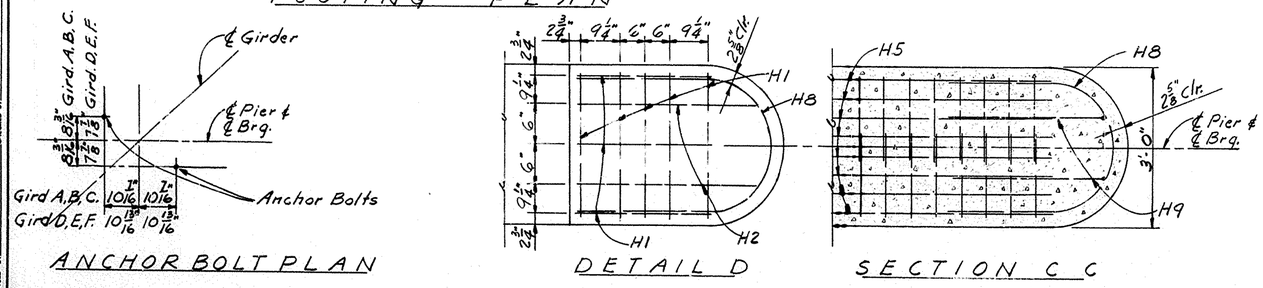

ESTIMATE OF QUANTITIES

ITEM	UNIT	AMOUNT
Concrete Class "A"	Cu. Yds.	62.0
Steel Reinforcement	Lbs.	14,882
Concrete Piling, Furnishing	Lin. Ft.	416
Concrete Piling, Driving	Lin. Ft.	416
Structure Excavation, Common	Cu. Yds.	86

BRIDGE OVER NORTH WESTERN PARKWAY AND 22ND STREET

SHEET 21 OF 63

COMMONWEALTH OF KENTUCKY
DEPARTMENT OF HIGHWAYS
FRANKFORT
COUNTY OF
JEFFERSON
I 64-CEDAR GROVE TERRACE TO 13TH STREET
LOUISVILLE-LEXINGTON ROAD
S.P. 56-273-11L

STATION 146+90 PROJECT NO. I 64-2(34)

BRIDGE NUMBER | DRAWING NO. 17123 | INDEX

PIER 6W

DESIGNED BY L.M.H. CHECKED BY R. LIN DATE 3-66 REVISED
DETAILED BY CHECKED BY DATE REVISED
TRACED BY CHECKED BY DATE REVISED

DIETZGEN NO. 188-2 ASEPROOF

FED. ROAD DIST.	STATE	FED. AID PROJ. NO.	FISCAL YEAR	SHEET NO.	TOTAL SHEETS
7	KY.				

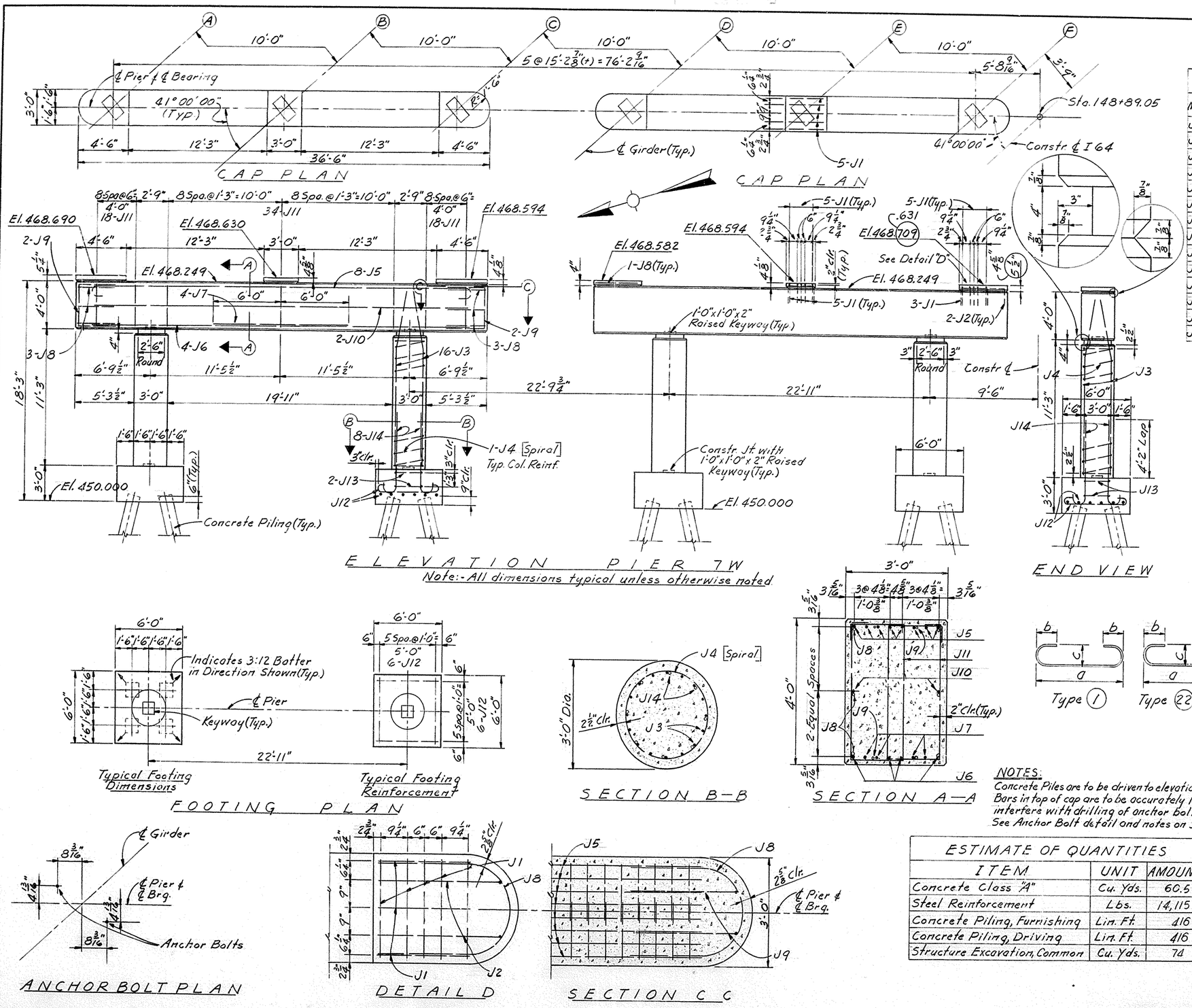

BILL OF REINFORCEMENT

Mark	Type	Size	No.	Length Ft.	Length In.	Location	a Ft.	a In.	b Ft.	b In.	c Ft.	c In.
J1	S10	4	52	5	8	Pad	2	8	1	6		
J2	S10	4	8	6	11	Pad	3	11	1	6		
J3	23	11	64	14	3	Col.	?	9				
J4	T5	4	4	109	10	Col.						
J5	1	11	16	36	8	Cap	33	6	1	0¾	1	2
J6	Str.	11	8	33	6	Cap						
J7	Str.	11	8	12	0	Cap						
J8	10	5	16	9	4	Cap & Pad	2	8	4	0	2	6¾
J9	S10	5	8	10	11	Cap	3	6¾	3	8		
J10	Str.	5	4	33	6	Cap						
J11	T2	5	140	11	8	Cap	1	8	3	8		
J12	1	6	48	6	10	Footing	5	6	0	6	0	6
J13	T3	4	8	9	8	Footing						
J14	22	10	32	7	8	Col.	6	3	0	11¼	1	0½

TABLE A	
MARK	TURNS
J4	13½

NOTES:
Concrete Piles are to be driven to elevation and bearing capacity shown in General Notes. See Sheet No. 2
Bars in top of cap are to be accurately located in accordance with the plans so that they do not interfere with drilling of anchor bolt holes.
See Anchor Bolt detail and notes on Sheet No. 38

ESTIMATE OF QUANTITIES

ITEM	UNIT	AMOUNT
Concrete Class "A"	Cu. Yds.	60.5
Steel Reinforcement	Lbs.	14,115
Concrete Piling, Furnishing	Lin. Ft.	416
Concrete Piling, Driving	Lin. Ft.	416
Structure Excavation, Common	Cu. Yds.	74

BRIDGE OVER NORTH WESTERN PARKWAY AND 22ND STREET

SHEET 22 OF 63

COMMONWEALTH OF KENTUCKY
DEPARTMENT OF HIGHWAYS
FRANKFORT
COUNTY OF
JEFFERSON
I64-CEDAR GROVE TERRACE TO 13TH STREET
LOUISVILLE-LEXINGTON ROAD

STATION 146+90 PROJECT NO. I64-2(341) S.P. 56-273-IIL

BRIDGE NUMBER | DRAWING NO. 17123 | INDEX

PIER 7W

DESIGNED BY: L.M.H. CHECKED BY: DATE: 10-9-59
DETAILED BY: CHECKED BY: DATE:
TRACED BY: CHECKED BY: DATE:
REVISED: Seat Elev. & Pad height - Girder F
REVISED: DATE 3-66
REVISED: DATE:

FED. ROAD DIST.	STATE	FED. AID PRO. NO.	FISCAL YEAR	SHEET NO.	TOTAL SHEETS
7	KY.				

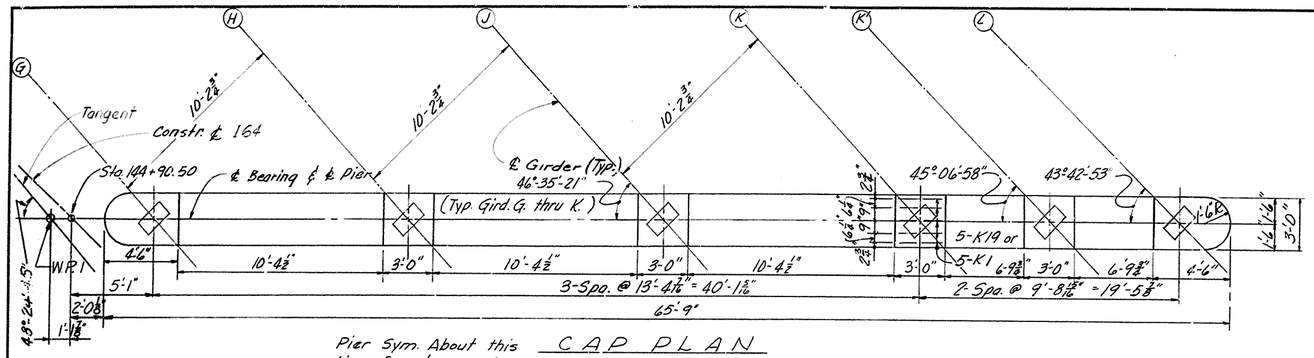

CAP PLAN

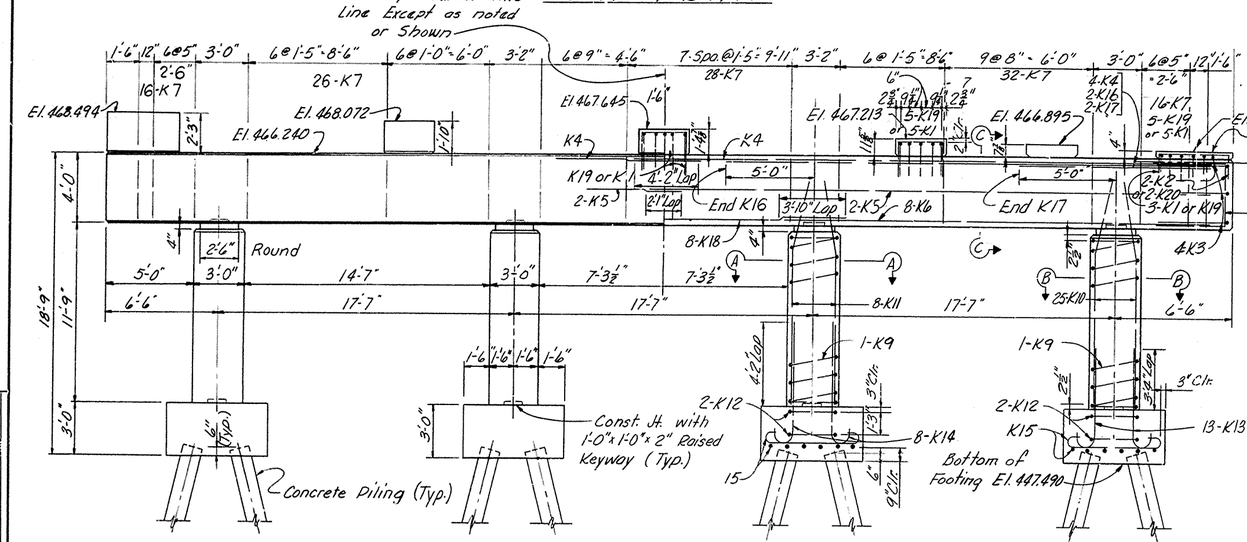

ELEVATION PIER 1E

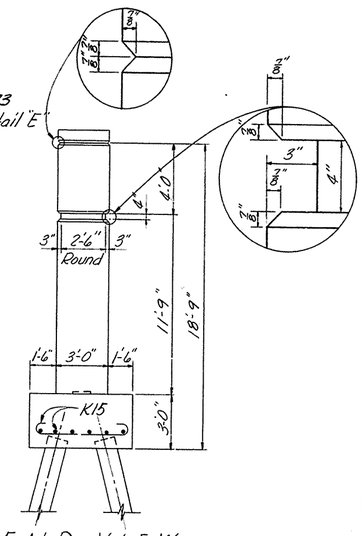

END VIEW

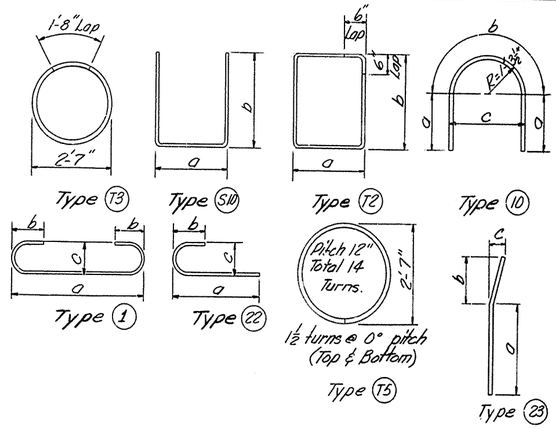

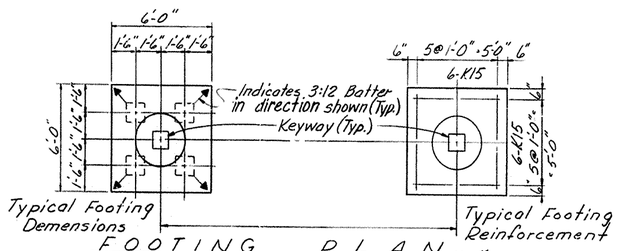

FOOTING PLAN

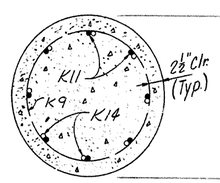

SECTION A-A

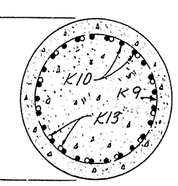

SECTION B-B

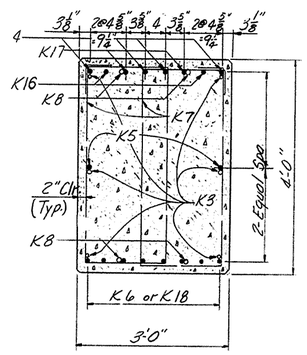

SECTION C-C

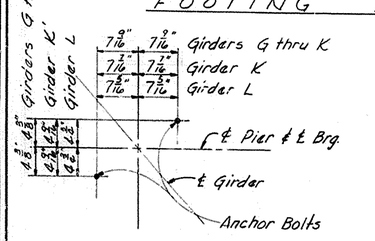

ANCHOR BOLT PLAN

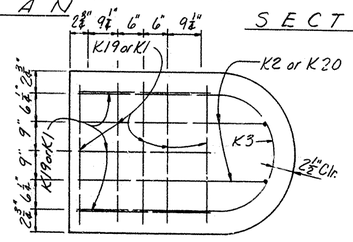

DETAIL-E

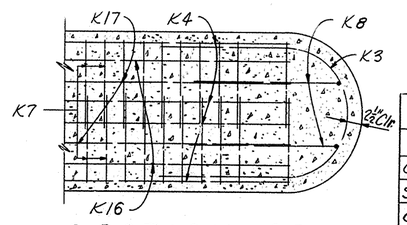

SECTION D-D

* Girders K, K', L
\# Girders G, H, J.

BILL OF REINFORCEMENT

	Mark	Type	Size	No.	Length Ft.	Length In.	Location	a Ft.	a In.	b Ft.	b In.	c Ft.	c In.
*	K1	S10	4	28	6	6	Pad	2	8	1	11		
*	K2	S10	4	2	6	4	Pad	3	10	1	3		
	K3	10	5	8	9	5	Pad & Cap	2	8	4	1	2	7
	K4	22	10	8	34	11	Cap	33	6	0	11½	1	0½
	K5	Str.	5	4	32	5							
	K6	Str.	9	8	24	6							
	K7	T2	4	118	11	7		1	7½	3	8		
	K8	S10	5	4	10	11	Cap	3	7	3	8		
	K9	T5	4	4	113	11	Col.						
	K10	23	11	50	14	9	Col.	10	3	4	6	0	8
	K11	23	10	16	14	5	Col.	10	3	4	2	0	7
	K12	T3	4	8	9	8	Footing						
	K13	22	8	26	6	6		5	5	0	9	0	10
	K14	22	10	16	7	8		6	3	0	11½	1	0½
	K15	1	6	48	6	10	Footing	5	6	0	6	0	6
	K16	22	10	4	29	0	Cap	27	7	0	11½	1	0½
	K17	22	10	4	11	5	Cap	10	0	0	11½	1	0½
	K18	Str.	9	8	42	1	Cap						
\#	K19	S10	4	28	9	0	Pad	2	8	3	2		
\#	K20	S10	4	2	10	2	Pad	3	10	3	2		

Notes:
Concrete Piles are to be driven to elevation and bearing capacity shown in General Notes, See Sheet 2
Bars in top of cap are to be accurately located in accordance with the plans so that they do not interfere with drilling of anchor bolt holes.
See Anchor Bolt details and notes on Sheet 38

ESTIMATE OF QUANTITIES

ITEM	UNIT	AMOUNT
Concrete Class "A"	Cu. Yds.	59.9
Steel Reinforcement	Lbs.	11,933
Concrete Piling, Furnishing	Lin. Ft.	384
Concrete Piling, Driving	Lin. Ft.	384
Structure Excavation, Common	Cu. Yds.	75

PIER 1E

BRIDGE OVER NORTH WESTERN PARKWAY AND 22ND STREET

SHEET 23 OF 63

COMMONWEALTH OF KENTUCKY
DEPARTMENT OF HIGHWAYS
FRANKFORT
COUNTY OF
JEFFERSON
I 64-CEDAR GROVE TERRACE TO 13TH STREET
LOUISVILLE-LEXINGTON ROAD
S.P. 56-273-1IL
STATION 146+90
PROJECT NO. I 64-2(34) 1

BRIDGE NUMBER

DRAWING NO. 17123

INDEX

DESIGNED BY ANE
DETAILED BY
TRACED BY
CHECKED BY R. LIN
CHECKED BY
CHECKED BY
DATE 3-66
REVISED
REVISED
REVISED

BRIDGE

FED. ROAD DIST.	STATE	FED. AID PROJ. NO.	FISCAL YEAR	SHEET NO.	* TOTAL SHEETS
7	KY.				

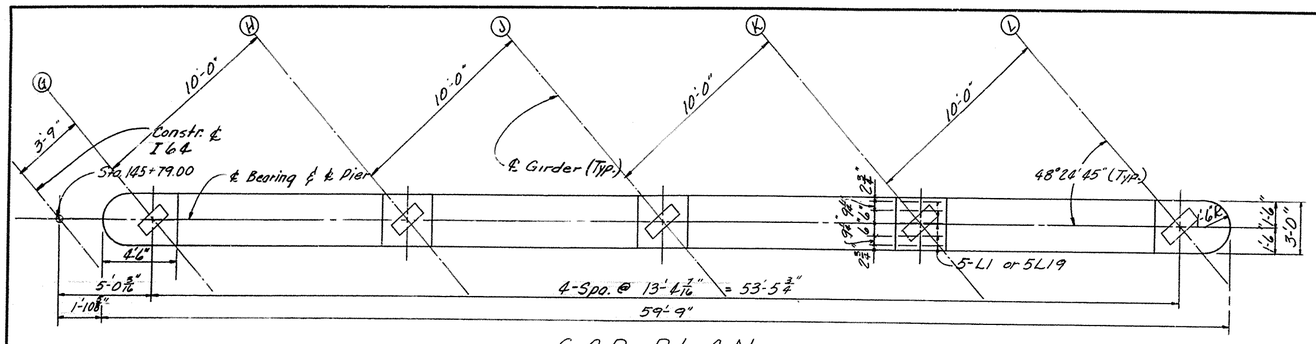

CAP PLAN

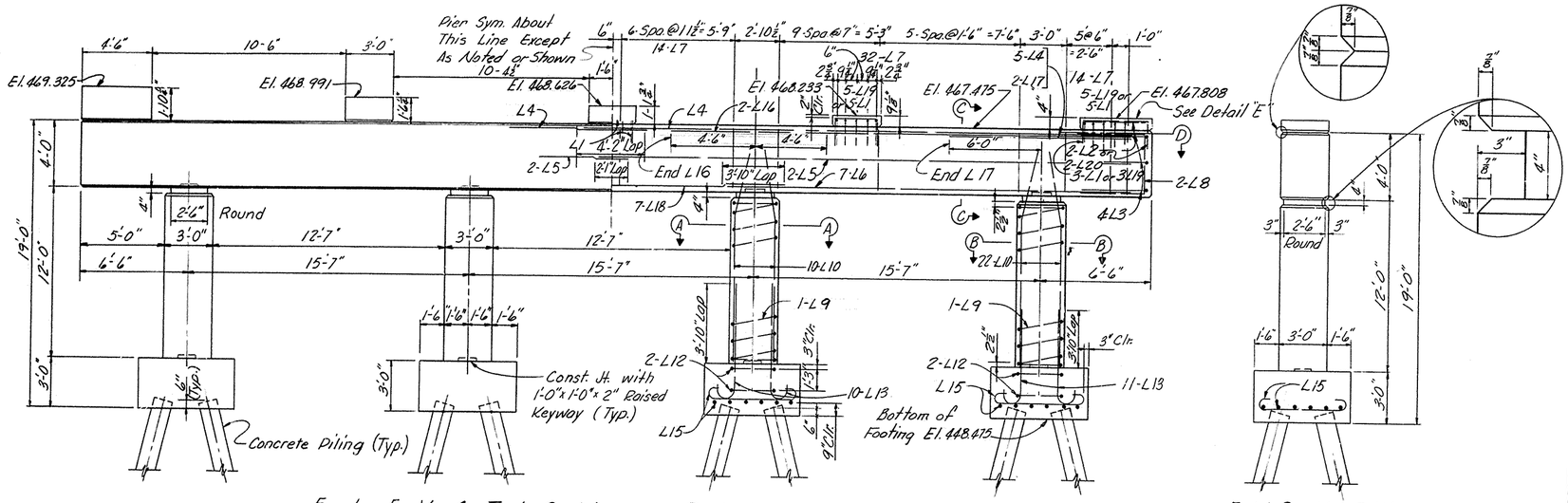

ELEVATION PIER 2E

END VIEW

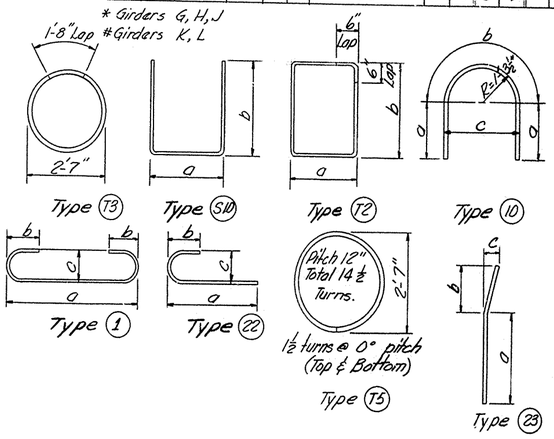

BILL OF REINFORCEMENT

	Mark	Type	Size	No.	Length Ft.	Length In	Location	a Ft.	a In	b Ft.	b In	c Ft.	c In
*	L1	S10	4	18	6	0	Pad	2	8	1	8		
*	L2	S10	4	2	6	4	Pad	3	10	1	3		
	L3	10	5	8	9	5	Pad & Cap	2	8	4	1	2	7
	L4	22	10	10	31	11	Cap	30	6	0	11½	1	0½
	L5	Str.	5	4	29	5							
	L6	Str.	9	7	22	6							
	L7	T2	4	120	11	6		1	7	3	8		
	L8	S10	5	4	10	11	Cap	3	7	3	8		
	L9	T5	4	4	118	0	Column						
	L10	23	11	64	15	0	Column	10	6	4	6	0	8
	L12	T3	4	8	9	8	Footing						
	L13	22	9	42	7	2		5	11	0	10½	0	11½
	L15	1	6	48	6	10	Footing	5	6	0	6	0	6
	L16	Str.	10	4	9	0	Cap						
	L17	22	10	4	12	5	Cap	11	0	0	11½	1	0½
	L18	Str.	9	7	38	1	Cap						
#	L19	S10	4	28	8	2	Pad	2	8	2	9		
#	L20	S10	4	2	9	4	Pad	3	10	2	9		

* Girders G, H, J
# Girders K, L

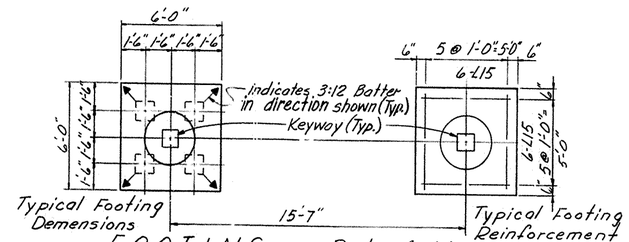

FOOTING PLAN

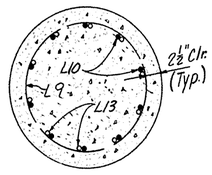

SECTION A-A

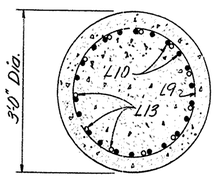

SECTION B-B

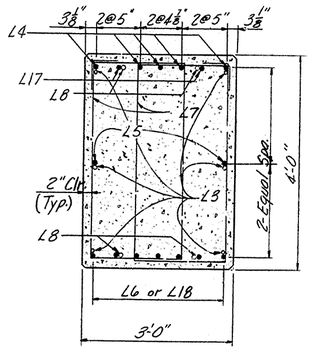

SECTION C-C

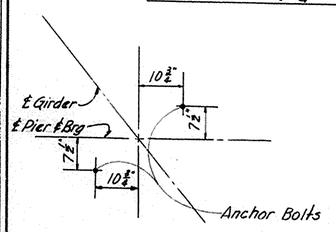

ANCHOR BOLT PLAN

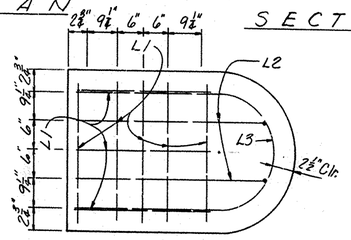

DETAIL-E

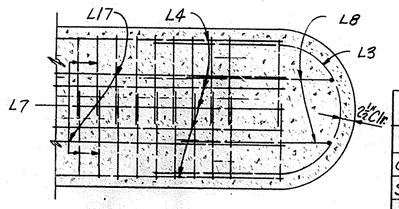

SECTION D-D

Notes:
Concrete Piles are to be driven to elevation and bearing capacity shown in General Notes, See Sheet 2
Bars in top of cap are to be accurately located in accordance with the plans so that they do not interfere with drilling of anchor bolt holes.
See Anchor Bolt details and notes on Sheet 38

ESTIMATE OF QUANTITIES

ITEM	UNIT	AMOUNT
Concrete Class "A"	Cu. Yds.	56.9
Steel Reinforcement	Lbs.	11,582
Concrete Piling, Furnishing	Lin. Ft.	400
Concrete Piling, Driving	Lin. Ft.	400
Structure Excavation, Common	Cu. Yds.	74

PIER 2E

BRIDGE OVER NORTH WESTERN PARKWAY AND 22ND STREET

SHEET 24 OF 63

COMMONWEALTH OF KENTUCKY
DEPARTMENT OF HIGHWAYS
FRANKFORT
COUNTY OF
JEFFERSON
I 64-CEDAR GROVE TERRACE TO 13TH STREET
LOUISVILLE-LEXINGTON ROAD
S.P. 56-273-IIL

STATION 146+90 PROJECT NO. 164-2(34) I

BRIDGE NUMBER | DRAWING NO. 17123 | INDEX

DESIGNED BY | DATE | REVISED
DETAILED BY NJE | CHECKED BY R. LIN | DATE 4-66 | REVISED
TRACED BY | CHECKED BY | DATE | REVISED

FED. ROAD DIST.	STATE	FED. AID PROJ. NO.	FISCAL YEAR	SHEET NO.	TOTAL SHEETS
7	KY.				

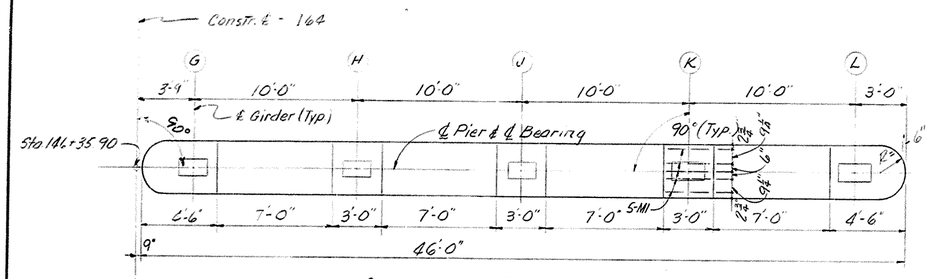

CAP PLAN

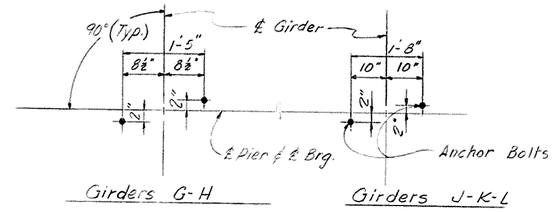

ANCHOR BOLT PLAN

BILL OF REINFORCEMENT

Mark	Type	Size	No.	Length Ft.	Length In.	Location	a Ft.	a In.	b Ft.	b In.	c Ft.	c In.
M1	510	4	18	5	6	* Pad	2	8	1	5		
M2	510	4	4	6	9	* Pad	3	11	1	5		
M3	510	4	28	6	8	# Pad	2	8	2	0		
M4	510	4	4	7	11	# Pad	3	11	2	0		
M5	10	5	8	9	4	Pad & Cap	2	8	4	0	2	7
M6	1	9	6	45	6	Cap (Top)	43	0	0	10½	0	11¼
M7	Str.	9	2	8	6	Cap (Top)						
M8	Str.	9	8	43	0	Cap						
M9	72	4	72	11	11	Cap	1	9½	3	8		
M10	510	5	4	10	11	Cap	3	7	3	8		
M11	23	10	40	10	8	Column	6	6				
M12	22	10	24	7	8	Column	6	3	0	11¼	1	0½
M13	75	4	3	85	4	Column						
M14	73	4	6	9	8	Footing						
M15	1	6	32	6	10	Footing	5	6	0	6	0	6
M16	1	8	13	9	2	Footing	7	0	0	9	0	10
M17	22	9	2	9	6	Cap	8	3	0	10½	0	11¼
M18	Str.	5	2	43	0	Cap						

*Girders K-L
#Girders G-H-J

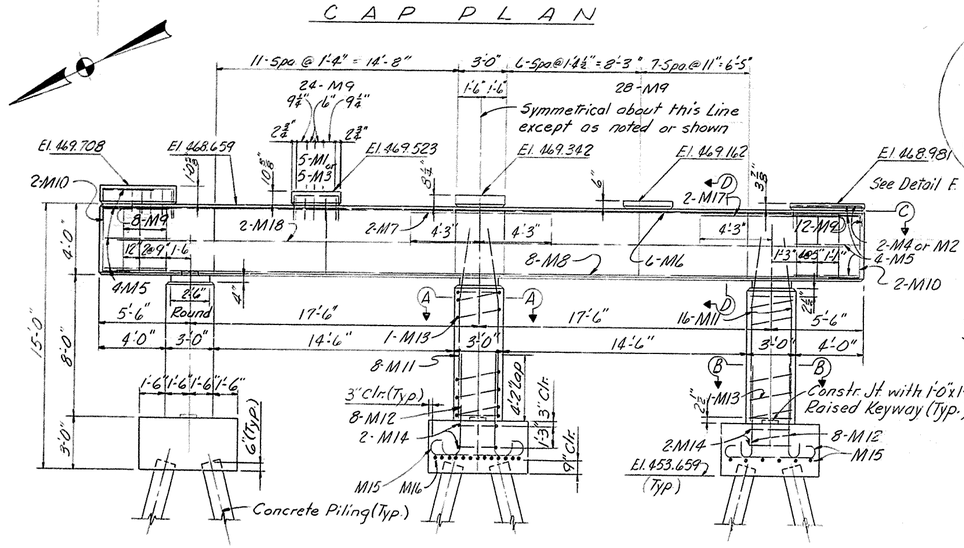

ELEVATION PIER 3E

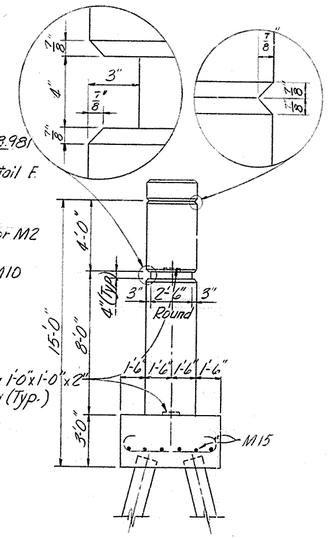

END VIEW

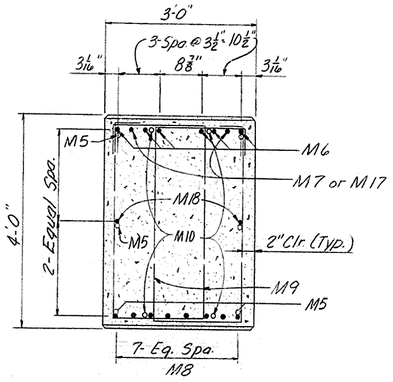

SECTION D-D

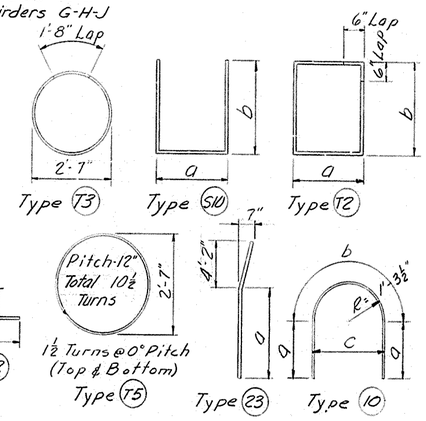

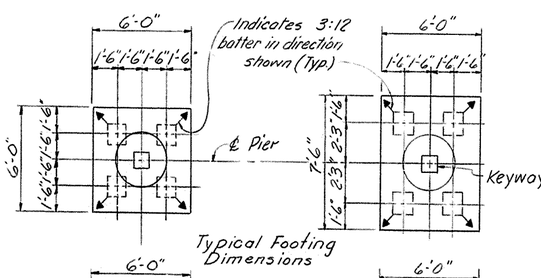

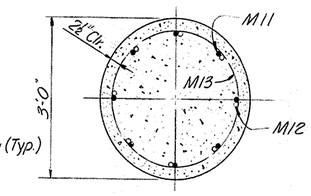

SECTION A-A

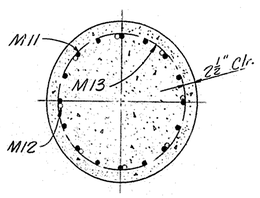

SECTION B-B

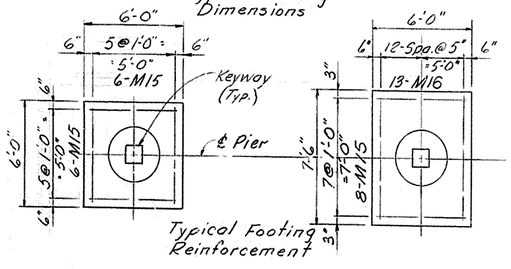

FOOTING PLAN

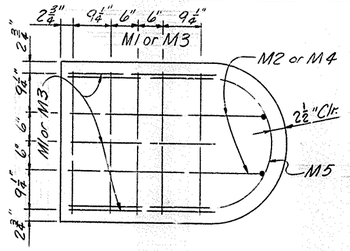

DETAIL-E

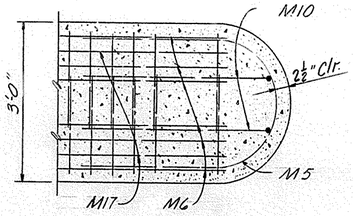

SECTION C-C

NOTES:

Concrete Piles are to be driven to the elevation and bearing capacity shown in General Notes. See Sheet No. 2

Bars in top of cap are to be accurately located in accordance with the plans so that they do not interfere with drilling of anchor bolt holes. See Anchor Bolt detail and Notes on Sheet No. 3B

ESTIMATE OF QUANTITIES

ITEM	UNIT	AMOUNT
Concrete Class "A"	Cu. Yds.	40.7
Steel Reinforcement	Lbs.	6,722
Concrete Piling, Furnishing	Lin. Ft.	370
Concrete Piling, Driving	Lin. Ft.	370
Structure Excavation, Common	Cu. Yds.	41

BRIDGE OVER NORTH WESTERN PARKWAY AND 22ND STREET

SHEET 25 OF 63

COMMONWEALTH OF KENTUCKY
DEPARTMENT OF HIGHWAYS
FRANKFORT
COUNTY OF
JEFFERSON
I 64-CEDAR GROVE TERRACE TO 13TH STREET
LOUISVILLE-LEXINGTON
ROAD

S.P. 56-273-III

STATION 146+90 **PROJECT NO.** 164-2(34)1

BRIDGE NUMBER | DRAWING NO. 17123 | INDEX

PIER 3E

DESIGNED BY: M.J.E. CHECKED BY: R. LIN
DETAILED BY: CHECKED BY:
TRACED BY: CHECKED BY:
DATE 3-66 REVISED

FED. ROAD DIST.	STATE	FED. AID PRO. NO.	FISCAL YEAR	SHEET NO.	TOTAL SHEETS
7	KY.				

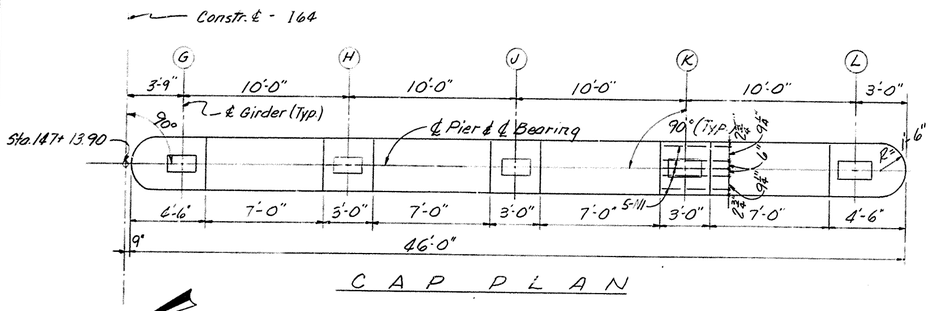

CAP PLAN

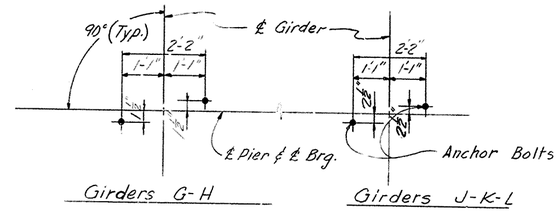

ANCHOR BOLT PLAN

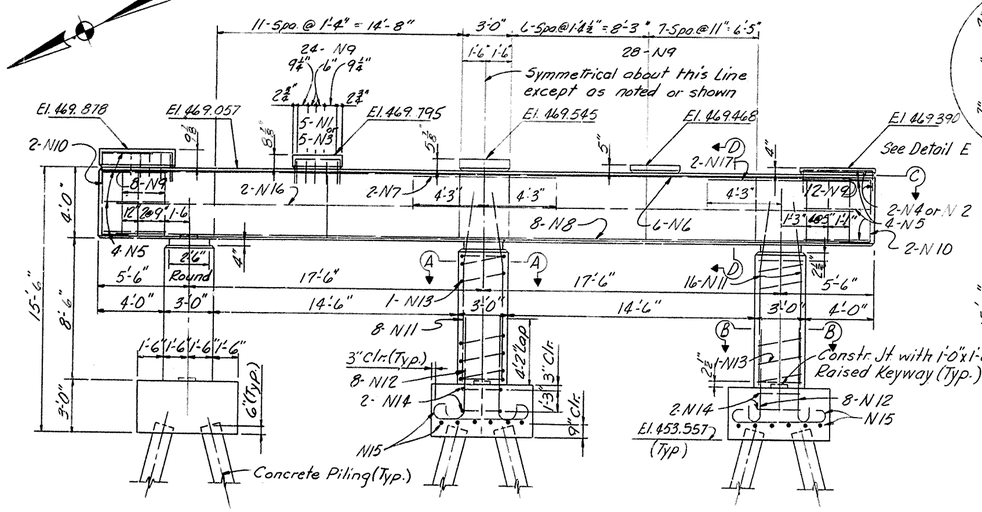

ELEVATION PIER 5E

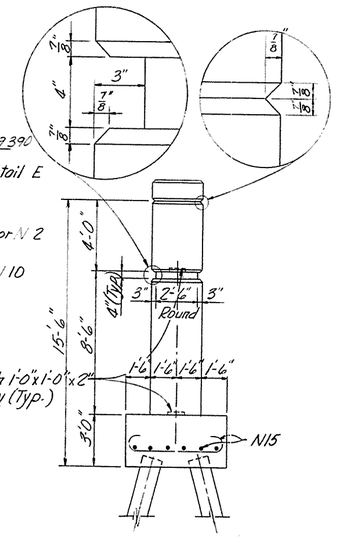

END VIEW

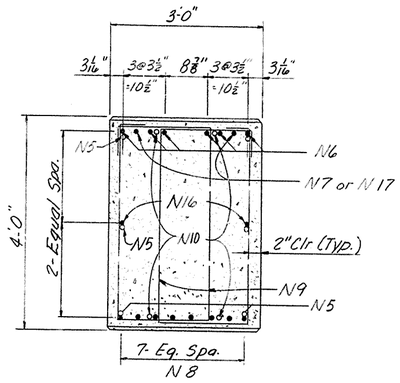

SECTION D-D

BILL OF REINFORCEMENT

Mark	Type	Size	No.	Length Ft.	Length In.	Location	a Ft.	a In.	b Ft.	b In.	c Ft.	c In.
N1	510	4	18	5	4	* Pad	2	8	1	4		
N2	510	4	4	6	7	* Pad	3	11	1	4		
N3	510	4	28	6	2	# Pad	2	8	1	9		
N4	610	4	4	7	5	# Pad	3	11	1	9		
N5	10	5	8	9	4	Pad & Cap	2	8	4	0	2	7
N6	1	9	6	45	6	Cap (Top)	43	0	0	10½	0	11¼
N7	Str.	9	2	8	6	Cap (Top)						
N8	Str.	9	8	43	0	Cap						
N9	72	4	72	11	11	Cap	1	9½	3	8		
N10	510	5	4	10	11	Cap	3	7	3	8		
N11	23	10	40	11	2	Column	7	0				
N12	22	10	24	7	8	Column	6	3	0	11½	1	0½
N13	75	4	3	89	4	Column						
N14	73	4	6	9	8	Footing						
N15	1	6	36	6	10	Footing	5	6	0	6	0	6
N16	Str.	5	2	43	0	Cap						
N17	22	9	2	9	6	Cap	8	3	0	10½	0	11¼

*Girders K-L
#Girders G-H-J

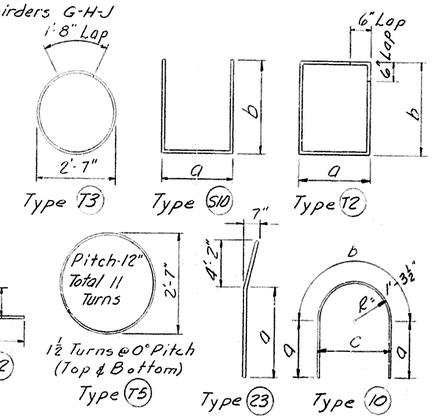

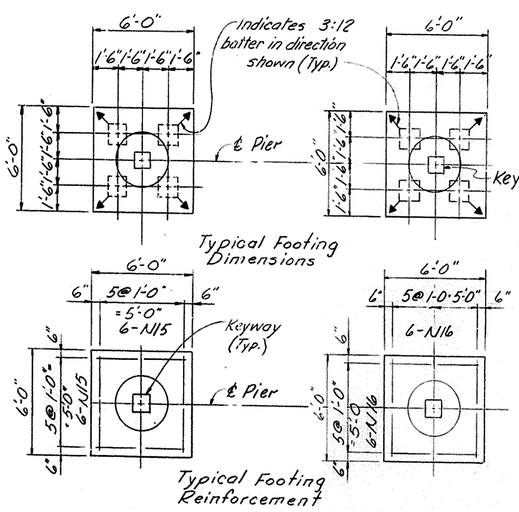

FOOTING PLAN

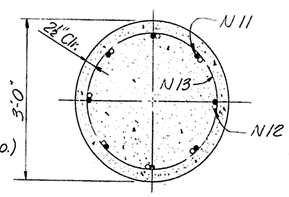

SECTION A-A

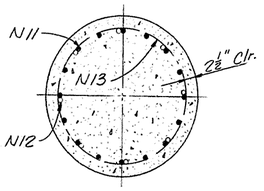

SECTION B-B

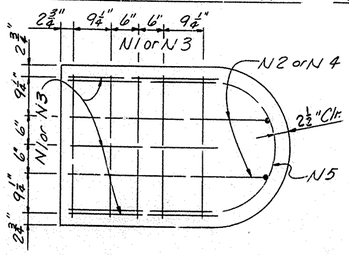

DETAIL-E

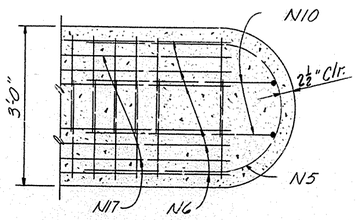

SECTION C-C

NOTES:

Concrete Piles are to be driven to the elevation and bearing capacity shown in General Notes. See Sheet No. 2

Bars in top of cap are to be accurately located in accordance with the plans so that they do not interfere with drilling of anchor bolt holes See Anchor Bolt detail and Notes on Sheet No. 38

ESTIMATE OF QUANTITIES

ITEM	UNIT	AMOUNT
Concrete Class "A"	Cu. Yds.	39.9
Steel Reinforcement	Lbs.	6,526
Concrete Piling, Furnishing	Lin. Ft.	360
Concrete Piling, Driving	Lin. Ft.	360
Structure Excavation, Common	Cu. Yds.	39

PIER 5E

BRIDGE OVER NORTH WESTERN PARKWAY AND 22ND STREET

SHEET 26 OF 63

COMMONWEALTH OF KENTUCKY
DEPARTMENT OF HIGHWAYS
FRANKFORT
COUNTY OF
JEFFERSON
I 64-CEDAR GROVE TERRACE TO 13TH STREET
LOUISVILLE-LEXINGTON
ROAD

S.P. 56-273-IIL

STATION 146+90 **PROJECT NO.** 164-2(34)1

BRIDGE NUMBER | DRAWING NO. 17123 | INDEX

DATE | REVISED | DATE | REVISED | DATE | REVISED

DESIGNED BY | CHECKED BY | DATE

DETAILED BY N.I.E. | CHECKED BY R. LIN | DATE 3-66

TRACED BY | CHECKED BY | DATE

KEUFFEL & ESSER CO. NO. 136-9 ARCHPROOF

FED. ROAD DIST.	STATE	FED. AID PRO. NO.	FISCAL YEAR	SHEET NO.	TOTAL SHEETS
7	KY.				

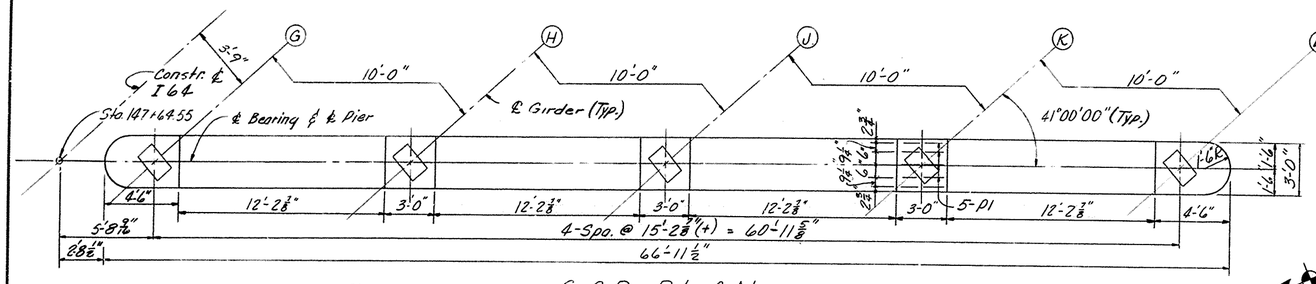

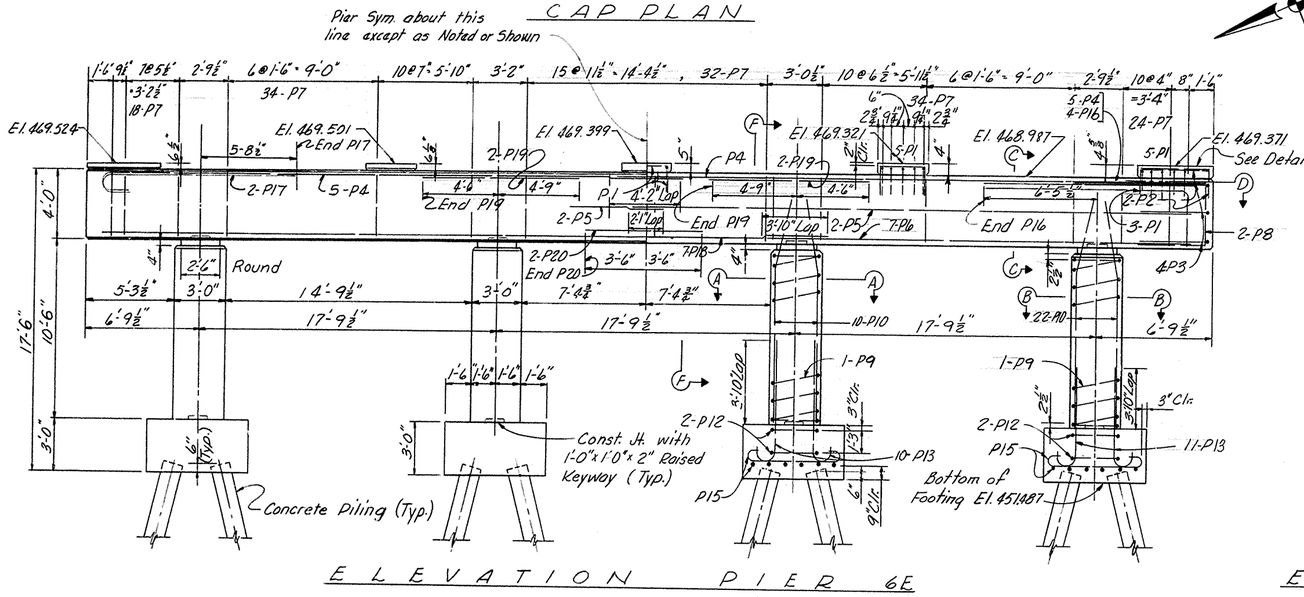

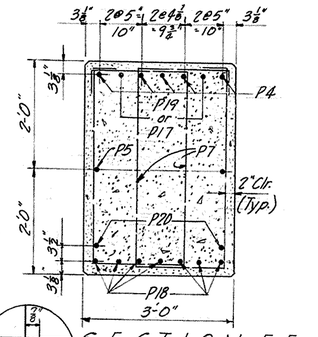

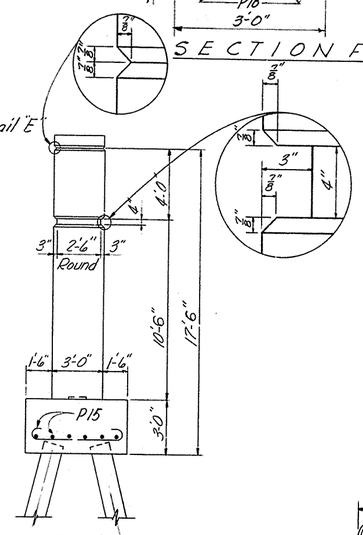

BILL OF REINFORCEMENT												
Mark	Type	Size	No.	Length Ft.	Length In.	Location	a Ft.	a In.	b Ft.	b In.	c Ft.	c In.
P1	S10	4	46	5	8	Pad	2	8	1	6		
P2	S10	4	4	6	10	Pad	3	10	1	6		
P3	10	5	8	9	5	Pad & Cap	2	8	4	1	2	7
P4	22	10	10	35	6	Cap	34	1	0	11½	1	0½
P5	Str.	5	4	33	1							
P6	Str.	9	7	25	0							
P7	T2	4	142	12	1		1	10½	3	8		
P8	S10	5	4	10	11	Cap	3	7	3	8		
P9	T5	4	4	101	8	Col.						
P10	23	11	64	13	6	Col.	9	0	4	6	0	8
P12	T3	4	8	9	8	Footing						
P13	22	9	42	7	2		5	11	0	10½	0	11½
P15	1	6	48	6	10	Footing	5	6	0	6	0	6
P16	22	10	4	13	2	Cap	11	9	0	11½	1	0½
P17	22	10	2	12	5		11	0	0	11½	1	0½
P18	Str.	9	8	42	10							
P19	Str.	10	4	9	3							
P20	Str.	9	2	7	0	Cap						

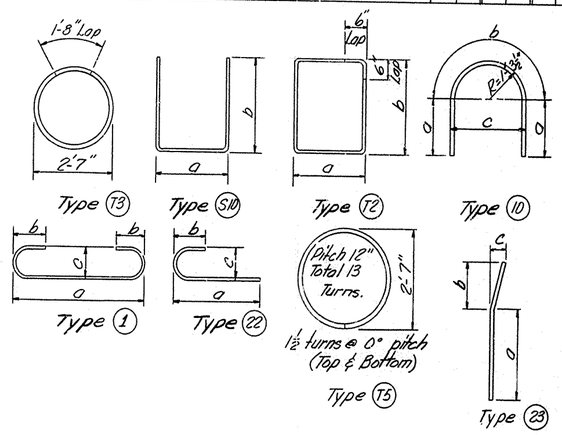

Notes:
Concrete Piles are to be driven to elevation and bearing capacity shown in General Notes, See Sheet 2
Bars in top of cap are to be accurately located in accordance with the plans so that they do not interfere with drilling of anchor bolt holes.
See Anchor Bolt details and notes on Sheet 38

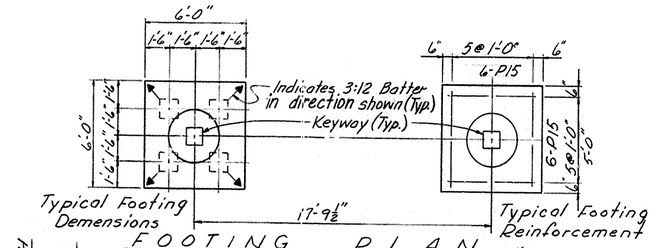

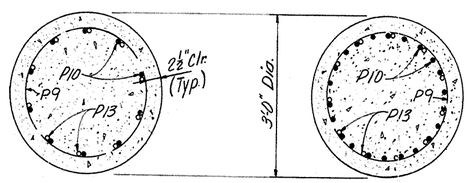

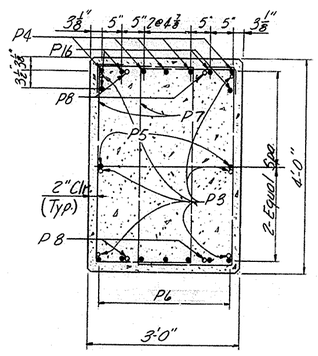

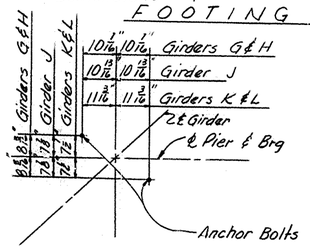

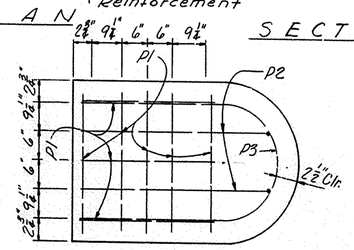

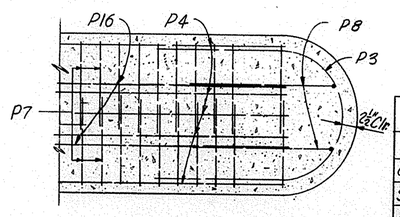

ESTIMATE OF QUANTITIES		
ITEM	UNIT	AMOUNT
Concrete Class "A"	Cu. Yds.	57.6
Steel Reinforcement	Lbs.	11,860
Concrete Piling, Furnishing	Lin. Ft.	458
Concrete Piling, Driving	Lin. Ft.	458
Structure Excavation, Common	Cu. Yds.	66

PIER 6E

BRIDGE OVER NORTH WESTERN PARKWAY AND 22ND STREET

SHEET 27 OF 63

COMMONWEALTH OF KENTUCKY
DEPARTMENT OF HIGHWAYS
FRANKFORT
COUNTY OF
JEFFERSON
I 64-CEDAR GROVE TERRACE TO 13TH STREET
LOUISVILLE-LEXINGTON ROAD

S.P. 56-273-11L

STATION 146+90 PROJECT NO. I 64-2(34) 1

BRIDGE NUMBER | DRAWING NO. 17123 | INDEX

DESIGNED BY: MJE CHECKED BY: R. LIN DATE: 3-66 REVISED:
DETAILED BY: CHECKED BY: DATE: REVISED:
TRACED BY: DATE: REVISED:

KEUFFEL & ESSER CO. 118-9 ASEPROOF

FED. ROAD DIST.	STATE	FED. AID PROJ. NO.	FISCAL YEAR	SHEET NO.	TOTAL SHEETS
7	KY.				

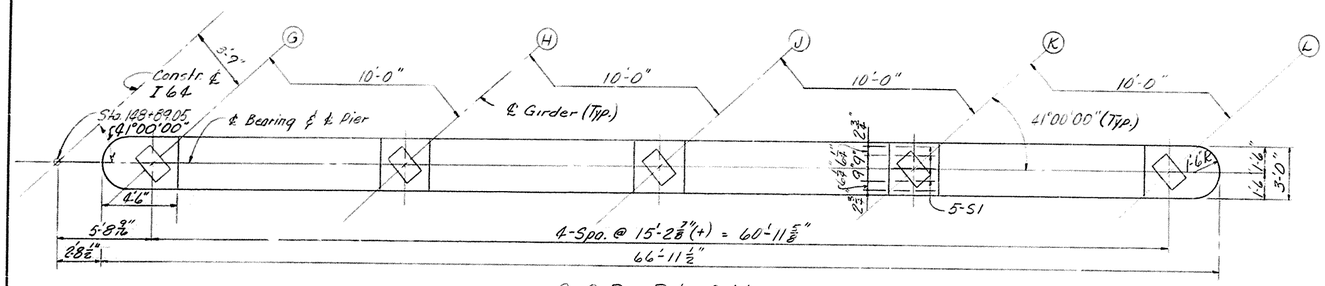

CAP PLAN

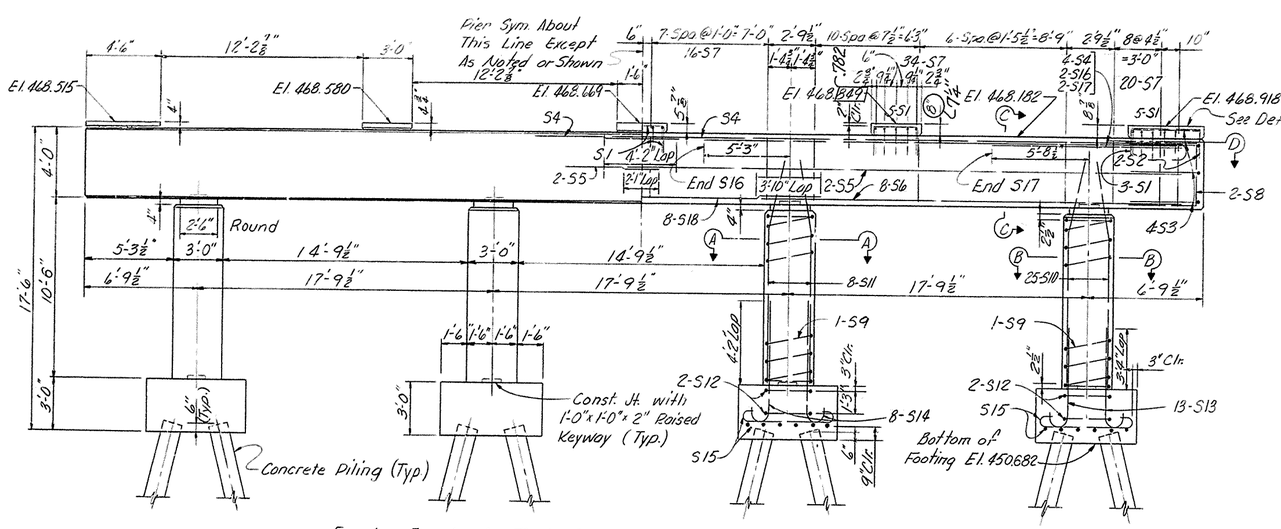

ELEVATION PIER 7E

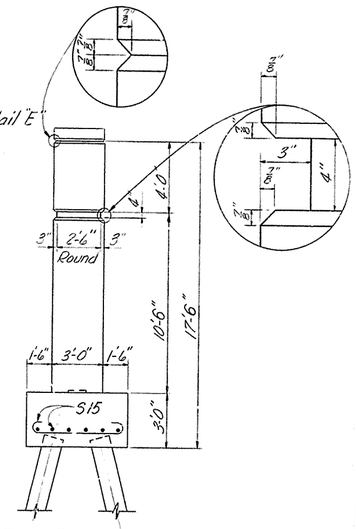

END VIEW

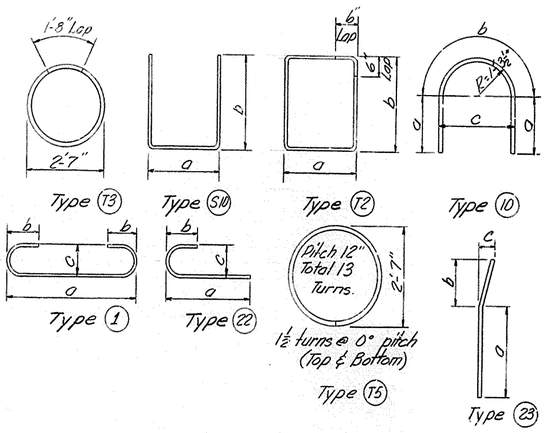

BILL OF REINFORCEMENT

Mark	Type	Size	No.	Length Ft	Length In	Location	a Ft	a In	b Ft	b In	c Ft	c In
S1	510	4	26	6	0	Pad	2	8	1	8		
S2	510	4	4	7	2	Pad	3	10	1	8		
S3	10	5	8	9	5	Pad & Cap	2	8	4	1	2	7
S4	22	10	8	35	6	Cap	34	1	0	11¼	1	0½
S5	Str.	5	4	33	1	Cap						
S6	Str.	9	8	25	0	Cap						
S7	12	4	140	11	7	Cap	1	7½	3	8		
S8	510	5	4	10	11	Cap	3	7	3	8		
S9	15	4	4	101	8	Column						
S10	23	11	50	13	6	Column	9	0	4	6	0	8
S11	23	10	16	13	2	Column	9	0	4	2	0	7
S12	13	4	8	9	8	Footing						
S13	12	8	26	6	6	Footing	5	5	0	9	0	10
S14	22	10	16	7	8	Footing	6	3	0	11¼	1	0½
S15	1	6	48	6	10	Footing	5	6	0	6	0	6
S16	22	10	4	29	9	Cap	28	4	0	11¼	1	0½
S17	22	10	4	12	5	Cap	11	0	0	11¼	1	0½
S18	Str.	9	8	42	10	Cap						

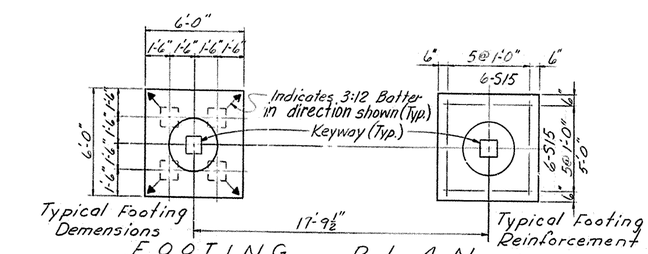

FOOTING PLAN

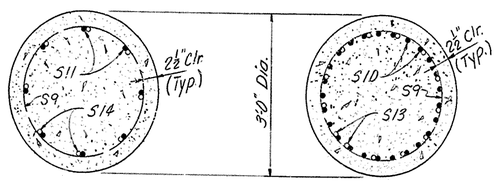

SECTION AA

SECTION B-B

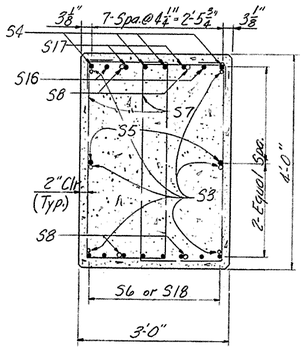

SECTION C-C

Notes:
Concrete Piles are to be driven to elevation and bearing capacity shown in General Notes, See Sheet 2
Bars in top of cap are to be accurately located in accordance with the plans so that they do not interfere with drilling of anchor bolt holes.
See Anchor Bolt details and notes on Sheet 38

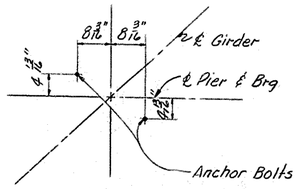

ANCHOR BOLT PLAN

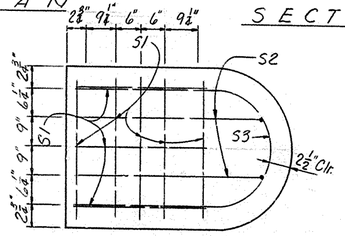

DETAIL-E

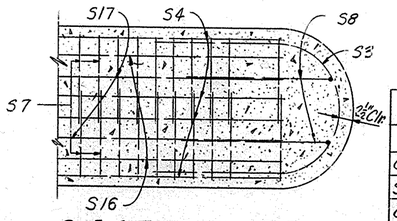

SECTION D-D

ESTIMATE OF QUANTITIES

ITEM	UNIT	AMOUNT
Concrete Class "A"	Cu. Yds.	57.7
Steel Reinforcement	Lbs.	11,630
Concrete Piling, Furnishing	Lin. Ft.	442
Concrete Piling, Driving	Lin. Ft.	442
Structure Excavation, Common	Cu. Yds.	68

PIER 7E

BRIDGE OVER NORTH WESTERN PARKWAY AND 22ND STREET

SHEET 28 OF 63

COMMONWEALTH OF KENTUCKY
DEPARTMENT OF HIGHWAYS
FRANKFORT
COUNTY OF
JEFFERSON
I 64-CEDAR GROVE TERRACE TO 13TH STREET
LOUISVILLE-LEXINGTON ROAD

S.P. 56-273-IIL

STATION 146+90 PROJECT NO. I 64-2(34) I

BRIDGE NUMBER | DRAWING NO. 17123 | INDEX

DESIGNED BY: AWE CHECKED BY: DATE
DETAILED BY: CHECKED BY: DATE
TRACED BY: CHECKED BY: DATE
REVISED: Seat Elev. & pad height - Girder K DATE 10-9-68 REVISED: DATE
REVISED: DATE

FED. ROAD DIST.	STATE	FED. AID PRO. NO.	FISCAL YEAR	SHEET NO.	TOTAL SHEETS
7	KY.				

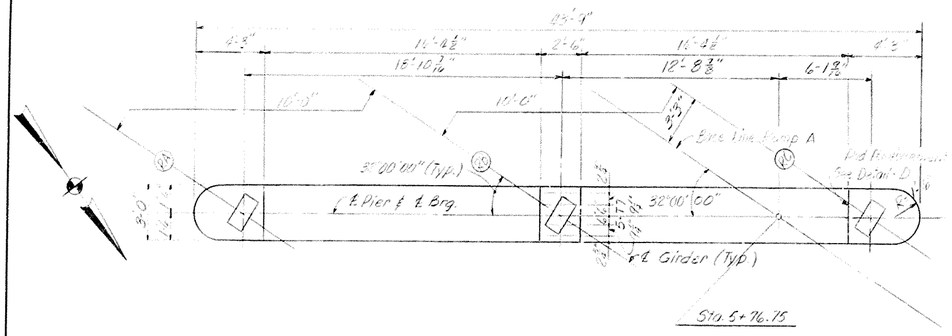

CAP PLAN

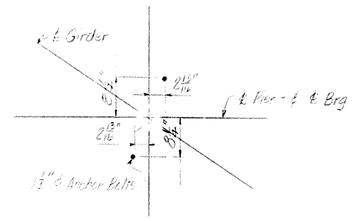

ANCHOR BOLT PLAN

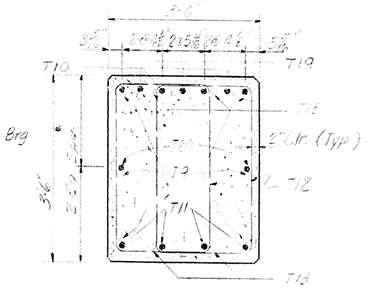

SECTION AA

BILL OF REINFORCEMENT

Mark	Type	Size	No	Length Ft	Length In	Location	a Ft	a In	b Ft	b In	c Ft	c In
T1	S10	4	5	5	2	Pad	2	8	1	3		
2	S10	4	5	5	10		2	8	1	7		
3	S10	4	5	6	6		2	8	1	11		
4	S10	4	2	7	6		3	8	1	11		
5	S10	4	2	6	2		3	8	1	3		
6	S10	4	3	6	8		2	2	1	3		
7	S10	4	5	5	4		2	2	1	7		
8	S10	4	3	6	0	Pad	2	2	1	11		
9	10	5	8	5	10	Cap & Pad	2	5	4	0	2	6 3/8
10	1	11	4	45	11	Cap	40	9	1	0 1/2	1	2
11	Str.	11	4	40	9							
12	T2	5	64	10	2	11'-2"	1	11	2	8	3	2
13	S10	5	4	10	11	Cap	3	6 3/4	3	8		
14	23	11	36	15	0	Col.	10	6				
15	22	9	36	7	2		5	11	0	10 1/2	0	11 1/2
16	T5	4	3	118	0	Col						
17	T3	4	6	9	8	Ftg.						
18	1	6	42	7	4	Ftg	6	0	0	6	0	6
19	22	11	6	15	4	Cap	13	9	1	0 3/4	1	2
T20	Str.	5	2	40	9	Cap						

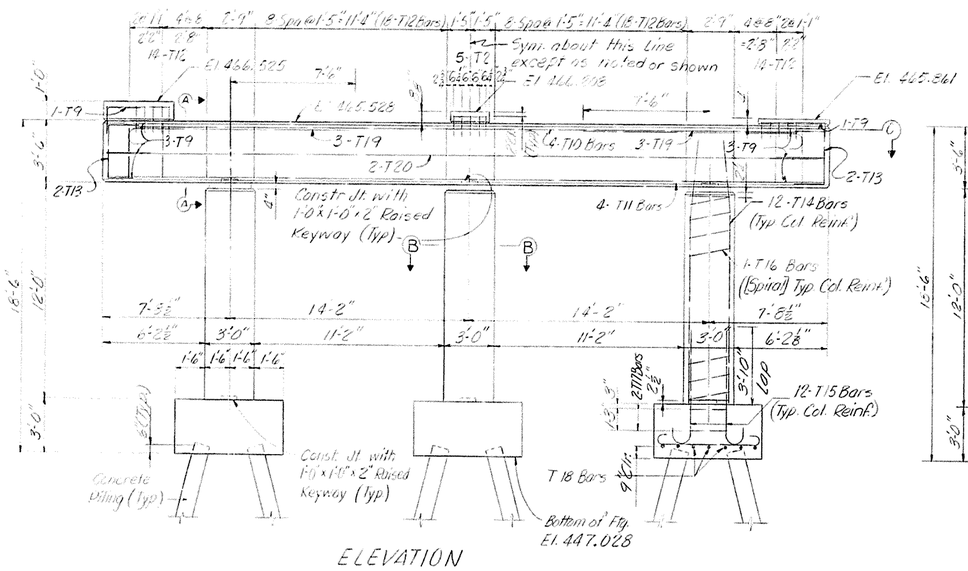

ELEVATION

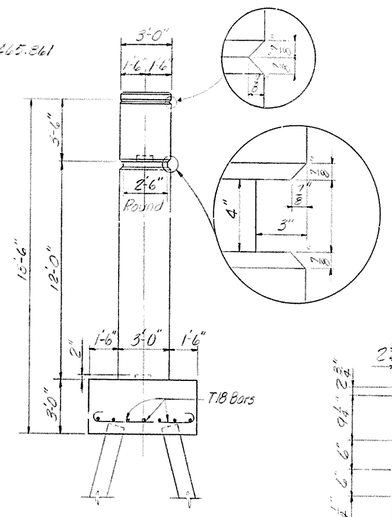

END VIEW

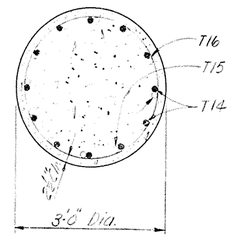

SECTION BB

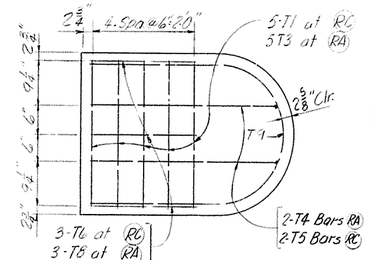

DETAIL - D

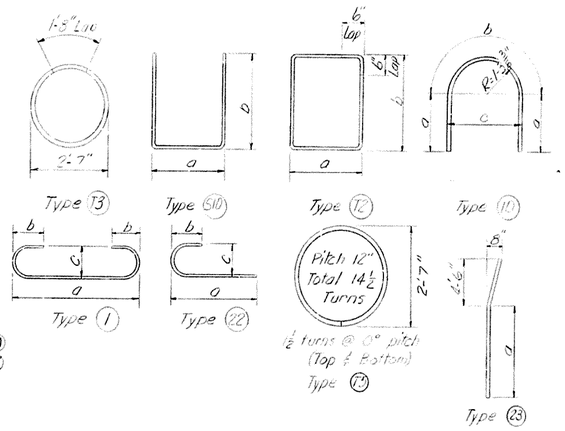

Notes:
Concrete Piles are to be driven to elevation and bearing capacity shown in General Notes, See Sheet 2
Bars in top of cap are to be accurately located in accordance with the plans so that they do not interfere with drilling of anchor bolt holes.
See Anchor Bolt details and notes on Sheet 38.

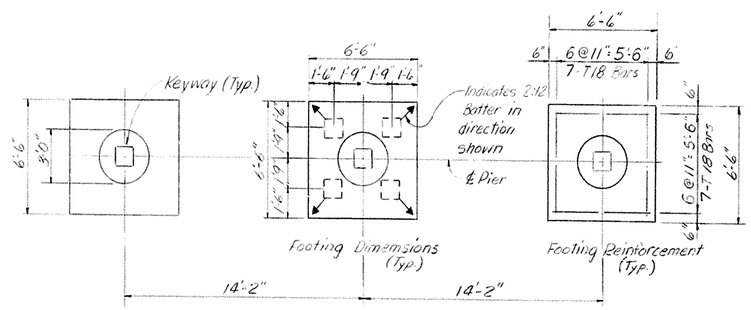

FOOTING PLAN

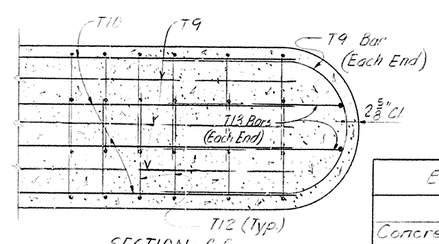

SECTION - C C

ESTIMATE OF QUANTITIES

ITEM	UNIT	AMOUNT
Concrete Class "A"	Cu. Yds.	41.0
Steel Reinforcement	Lbs.	7838 (2,771)
Concrete Piling, Furnishing	Lin. Ft.	276
Concrete Piling, Driving	Lin. Ft.	276
Structure Excavation, Common	Cu. Yds.	83

PIER R1

BRIDGE OVER NORTH WESTERN PARKWAY AND 22ND STREET

SHEET 29 OF 63

COMMONWEALTH OF KENTUCKY
DEPARTMENT OF HIGHWAYS
FRANKFORT
COUNTY OF
JEFFERSON
164-CEDAR GROVE TERRACE TO 13TH STREET
LOUISVILLE-LEXINGTON
ROAD

STATION 146+90 **PROJECT NO.** 164-2(34) I S.P. 56-273-IIL

BRIDGE NUMBER — DRAWING NO. 17123 — INDEX

DESIGNED BY NUE — CHECKED BY — DATE
DETAILED BY R. LIN — CHECKED BY — DATE 3-66
TRACED BY — CHECKED BY — DATE
REVISED Bar T12 Add — REVISED — REVISED

DIETZGEN NO. 138-3 AGEPROOF

BRIDGE

FED. ROAD DIST.	STATE	FED. AID PROJ. NO.	FISCAL YEAR	SHEET NO.	TOTAL SHEETS
7	KY.				

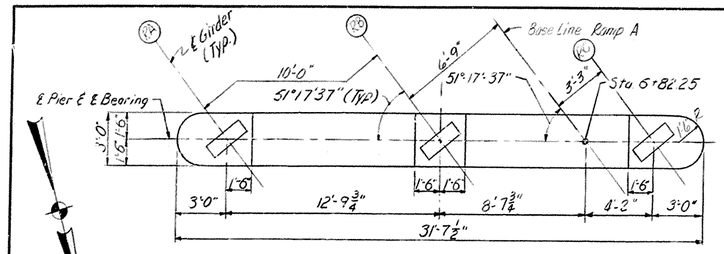

CAP PLAN

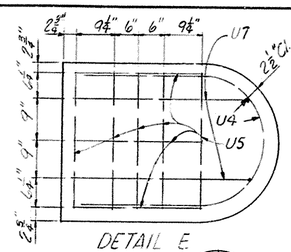

DETAIL E

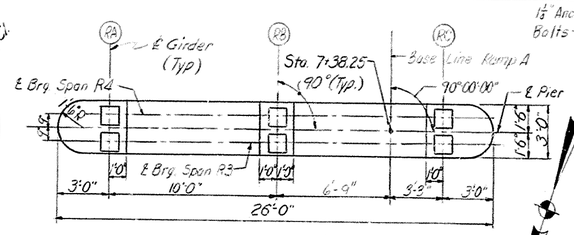

CAP PLAN

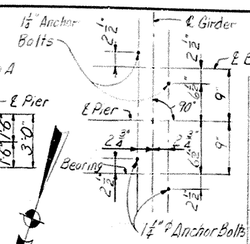

ANCHOR BOLT PLAN PIER R3 (Typ.)

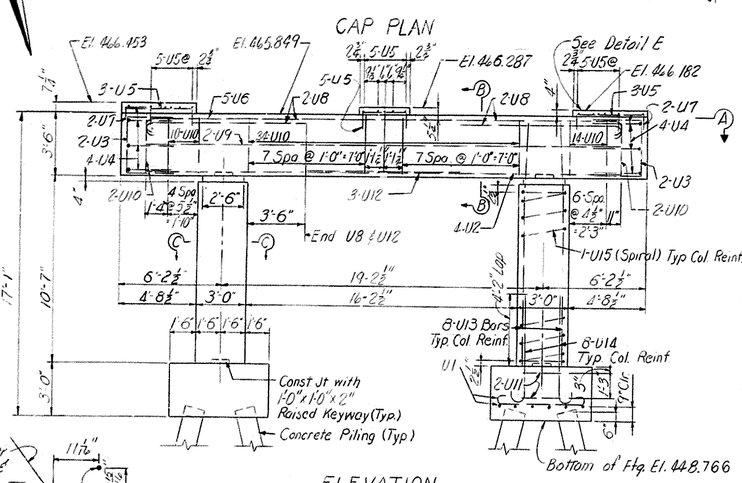

ELEVATION PIER R2

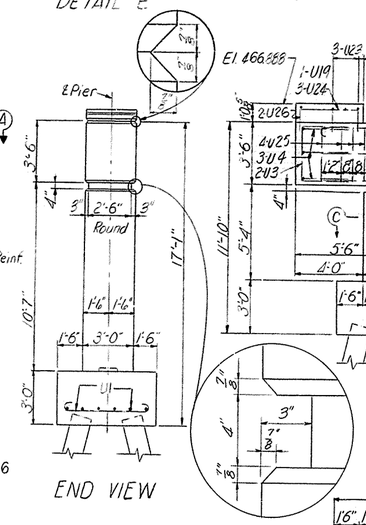

END VIEW

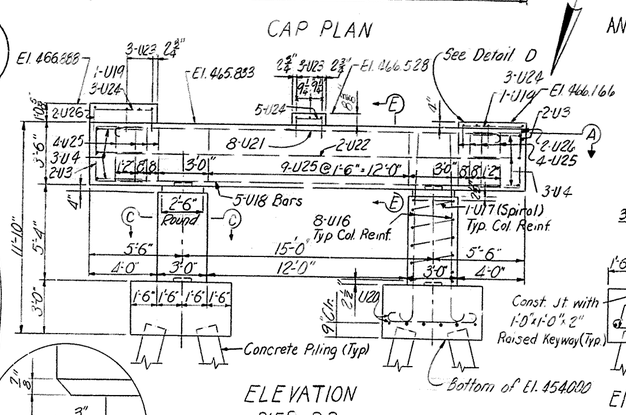

ELEVATION PIER R3

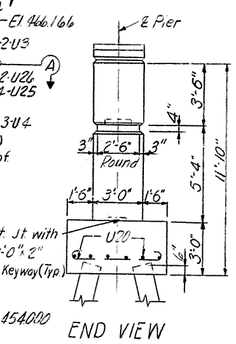

END VIEW

BILL OF REINFORCEMENT

Mark	Type	Size	Number Pier R2	Number Pier R3	Length Ft.	Length in.	Location	a Ft.	a in.	b Ft.	b in.	c Ft.	c in.
U1	1	6	24	—	6	10	Ftg.	5	6	0	6	0	6
2	Str	10	4	—	28	8	Cap.						
3	S10	5	4	4	10	5	"	3	1	3	8		
4	10	5	8	6	9	4	Cap & Pad	2	8	4	0	2	7
5	S10	4	26	—	5	8	Pad	2	8	1	6		
6	1	9	5	—	31	2	Cap	28	7½	0	10½	0	11½
7	S10	4	4	—	6	10	Pad	3	10	1	6		
8	22	9	8	—	10	11	Cap	9	8	0	10½	0	11½
9	Str	5	2	—	28	8	"						
10	T2	4	62	—	11	0	"	1	10	3	2		
11	T3	4	4	—	9	8	Ftg.						
12	Str	10	3	—	9	3	Cap.						
13	23	10	16	—	13	3	Col.	9	1				
14	22	10	16	—	7	8	"	6	3	0	11½	1	0½
15	T5	4	2	—	105	9	"						
16	22	10	—	16	11	6	"	5	11	0	11½	1	0½
17	T5	4	—	2	60	9	"						
18	Str	9	—	5	23	0	Cap						
19	10	5	—	2	8	8	Pad	2	4	4	0	2	7
20	1	6	—	24	6	10	Ftg	5	6	0	6	0	6
21	1	6	—	8	24	4	Cap	23	0	0	6	0	6
22	Str	5	—	2	23	0	"						
23	S10	4	—	9	6	8	Pad	2	8	2	0		
24	S10	4	—	11	5	8	"	1	8	2	0		
25	12	4	—	17	8	0	Cap	2	8	3	2		
U26	S10	4	—	4	7	4	Pad	3	4	2	0		

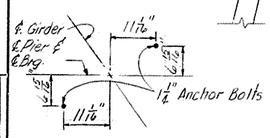

ANCHOR BOLT PLAN PIER R2 (Typ.)

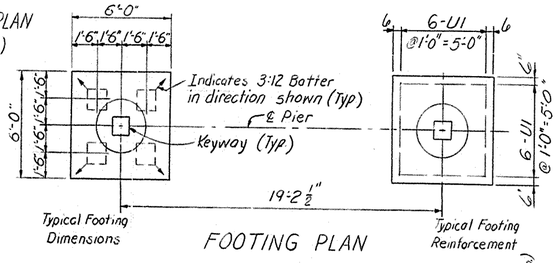

FOOTING PLAN

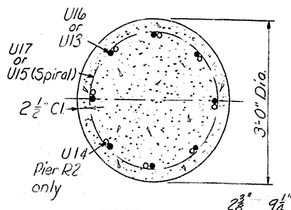

SECTION C-C

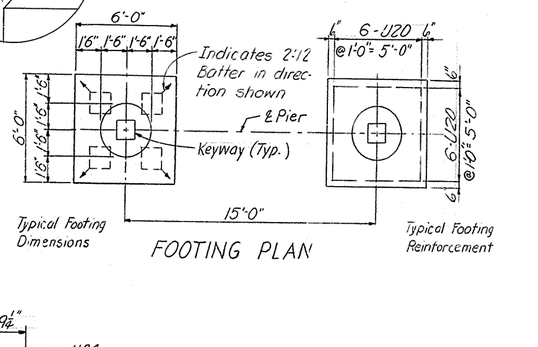

FOOTING PLAN

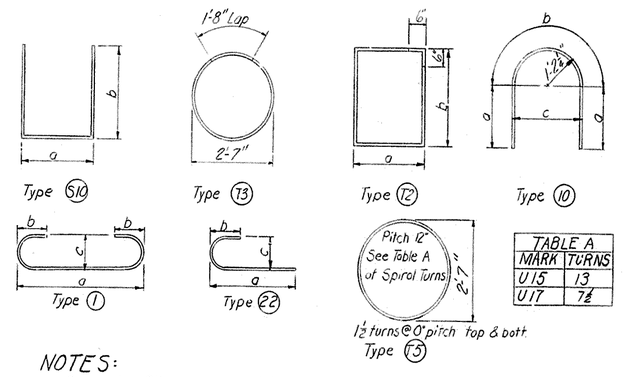

TABLE A	
MARK	TURNS
U15	13
U17	7½

NOTES:

Concrete Piles are to be driven to elevation and bearing capacity shown in General Notes, see Sheet 2

Bars in top of cap are to be accurately located in accordance with the plans so that they do not interfere with drilling of anchor bolt holes.

See Anchor Bolts detail and notes on Sht. 38

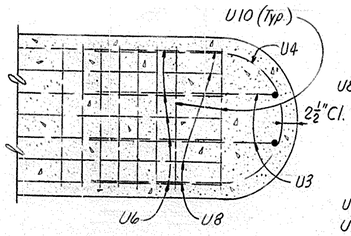

SECTION A-A

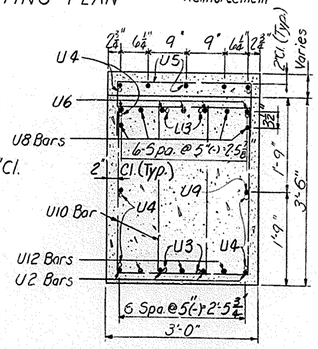

SECTION B-B

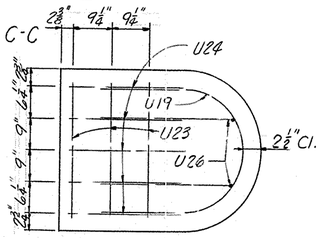

DETAIL - D

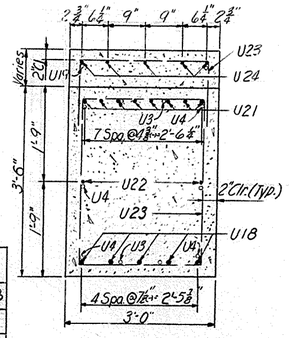

SECTION E-E

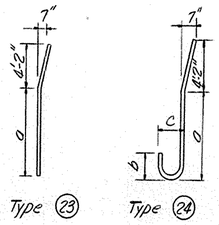

ESTIMATE OF QUANTITIES		AMOUNT	
ITEM	UNIT	PIER R2	PIER R3
Concrete Class "A"	Cu. Yds.	26.2	21.5
Steel Reinforcement	Lbs.	4,045	2,162
Concrete Piling, Furnishing	Lin. Ft.	200	257
Concrete Piling, Driving	Lin. Ft.	200	257
Structure Excavation, Common	Cu. Yds.	32	30

PIER R2 & R3

BRIDGE OVER NORTH WESTERN PARKWAY AND 22ND STREET

SHEET 30 OF 63

COMMONWEALTH OF KENTUCKY
DEPARTMENT OF HIGHWAYS
FRANKFORT
COUNTY OF
JEFFERSON

I 64-CEDAR GROVE TERRACE TO 13TH STREET
LOUISVILLE-LEXINGTON
ROAD

STATION 146+90 PROJECT NO. S.P. 56-273-111L I 64-2(34)1

BRIDGE NUMBER | DRAWING NO. 17123 | INDEX

DESIGNED BY | DATE | REVISED | DATE | REVISED | DATE
DETAILED BY | CHECKED BY R. LIN | DATE 3-66 | REVISED | DATE | REVISED | DATE
TRACED BY | CHECKED BY | DATE | DATE

DIETZGEN NO. 131-3 ASE/PROOF

FED. ROAD DIST.	STATE	FED. AID PRO. NO.	FISCAL YEAR	SHEET NO.	TOTAL SHEETS
7	KY.				

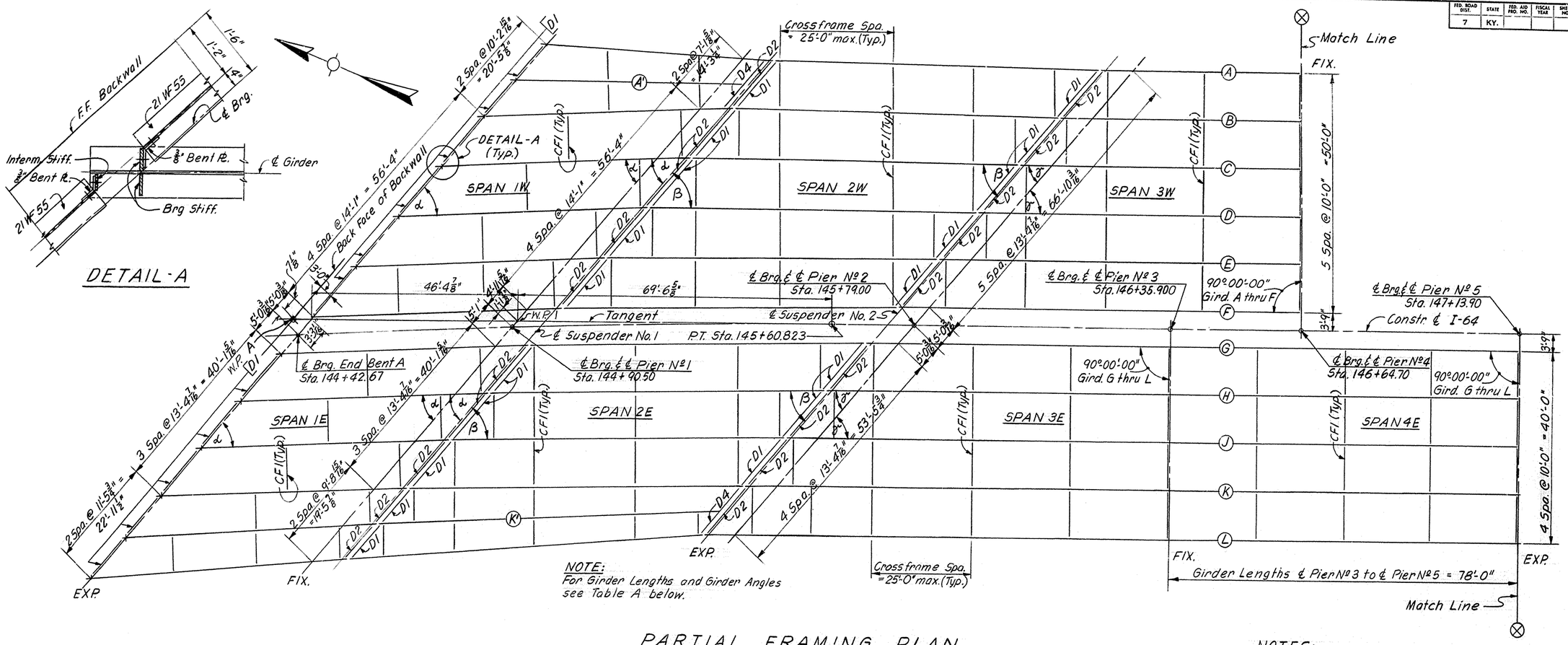

NOTE:
For Girder Lengths and Girder Angles see Table A below.

PARTIAL FRAMING PLAN

NOTES:
- For Structural Steel Notes, see Sht. No. 3
- For Welding Notes, see Std. Dwg. AWS2, current edition.
- For D1, D2, D4, & CF1, see Sht. No. 32
- For Expansion Dam Details see Shts. No. 39, 40 & 41
- For Suspender Details see Sht. No. 37
- All dimensions shown are horizontal and should be corrected for grade where applicable.
- Bolts: 7/8" ϕ A325 unless noted
- Holes: 15/16" ϕ unless noted
- All Steel A36 unless noted

TABLE A

Girder	GIRDER LENGTHS: ℄ Brg. End Bent A to ℄ Pier No 1	℄ Pier No 1 to ℄ Susp. No 1	℄ Susp. No 1 to ℄ Susp. No 2	℄ Susp. No 2 to ℄ Pier No 2	℄ Pier No 2 to ℄ Pier No 3 or No 4	℄ Pier No 6 to ℄ Pier No 4 or No 5	GIRDER ANGLES: α	β	γ	BEARING SHOES: End-Bent A	Pier No 1	Pier No 2	Pier No 3	Pier No 4	Pier No 5	Pier No 6	Pier No 7	End-Bent B
A	43'-8 7/8"	5'-8 1/16"	74'-4 15/16"	6'-0"	38'-0"	38'-0 1/16"	52°-31'-26"	49°-33'-15"	48°-24'-45"	E 100	F 225	E 225	—	F 225	—	E 275A	F 275A	E 100
A'	45'-8 3/8"	5'-11 1/8"	—	—	—	—	49°-25'-31"	—	—	↑	↑	—	—	—	—	—	—	—
B	47'-9 3/8"	6'-2 5/16"	74'-5 5/8"	6'-0"	46'-10 1/2"	49'-6 1/4"	46°-35'-21"	49°-30'-05"	48°-24'-45"			E 225	—	F 225	—	E 275A	F 275A	E .00
C	↑	↑	74'-11 3/16"	↑	55'-9"	61'-0 5/16"	↑	49°-05'-12"	↑			↑	—	F 225	—	E 275A	↑	↑
D			75'-4 13/16"		64'-7 1/2"	72'-6 3/8"		48°-40'-37"					—	F 225	—	E 300		
E			75'-10 1/2"		73'-6"	84'-0 3/8"		48°-16'-21"					—	F 275B	—	E 300		
F			76'-4 1/4"		82'-4 7/16"	95'-6 7/16"		47°-52'-23"				E 225	—	F 275B	—	E 300		
G			76'-4 1/4"		60'-2 3/4"	54'-11 9/16"		↑				E 250	F 225	—	E 225	E 275A		
H			76'-4 1/4"		69'-1 1/4"	66'-5 5/8"						↑	F 225	—	E 225	E 275A		
J	↓	↓	76'-4 1/4"	↓	77'-11 3/4"	77'-11 5/8"							F 250	—	E 275B	E 300	↓	↓
K	47'-9 3/8"	6'-2 5/16"	76'-4 1/4"	6'-0"	86'-10 3/16"	89'-5 7/16"	46°-35'-21"	47°-52'-23"	48°-24'-45"			E 250	F 250	—	E 275B	E 325	F 275A	E 100
K'	48'-11 3/8"	6'-4 3/16"	78'-3 3/8"	—	—	—	45°-06'-58"	46°-19'-60"	—			—	—	—	—	—	—	—
L	50'-2 3/4"	6'-6 1/8"	80'-3 7/16"	6'-0"	95'-8 11/16"	100'-11 3/4"	43°-42'-53"	44°-52'-07"	48°-24'-45"	E 100	F 225	E 250	F 250	—	E 275B	E 325	F 275A	E 100

STRUCTURAL STEEL

BRIDGE OVER NORTH WESTERN PARKWAY AND 22ND STREET

SHEET 31 OF 63

COMMONWEALTH OF KENTUCKY
DEPARTMENT OF HIGHWAYS
FRANKFORT
COUNTY OF
JEFFERSON
I 64-CEDAR GROVE TERRACE TO 13TH STREET
LOUISVILLE-LEXINGTON ROAD
S.P. 56-273-IIL

STATION 146+90 **PROJECT NO.** I 64-2(34)1

BRIDGE NUMBER | DRAWING NO. 17123 | INDEX

DESIGNED BY: CHECKED BY: DATE
DETAILED BY: HAS, 2-3-66 CHECKED BY: R. LIN DATE 4-66 REVISED
TRACED BY: CHECKED BY: DATE REVISED
DATE REVISED

WHITEGOOD STD. 130-3 ASEPROOF

FED. ROAD DIST.	STATE	FED. AID PROJ. NO.	FISCAL YEAR	SHEET NO.	TOTAL SHEETS
7	KY.				

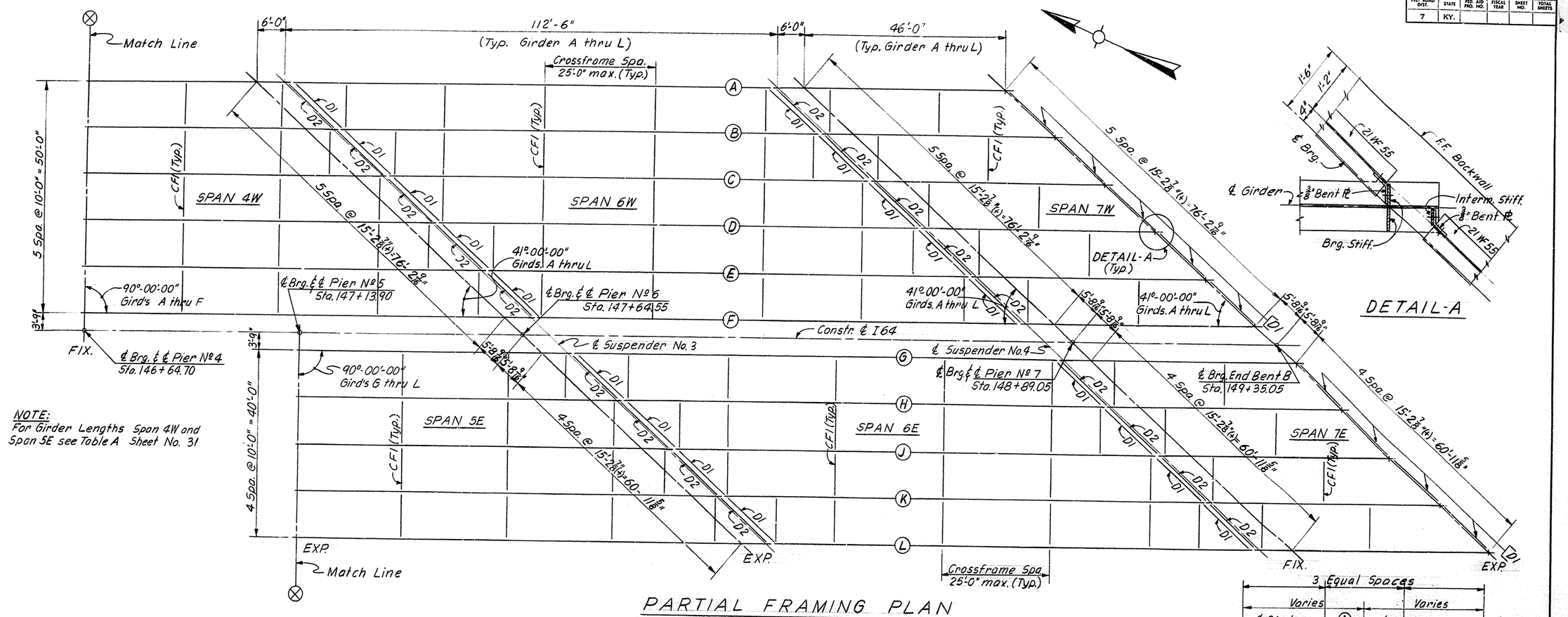

NOTE:
For Girder Lengths Span 4W and Span 5E see Table A Sheet No. 31

PARTIAL FRAMING PLAN

DETAIL-A

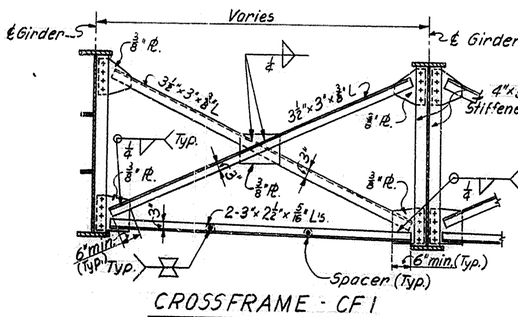

CROSSFRAME - CF1

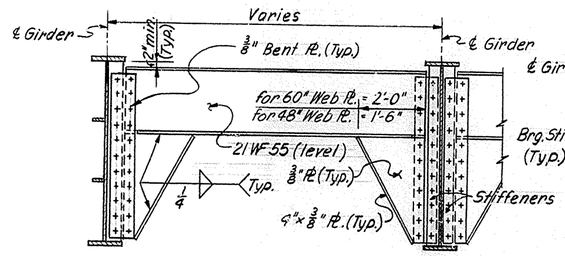

DIAPHRAGM - D1

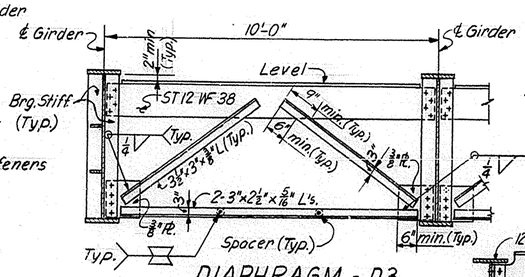

DIAPHRAGM - D3

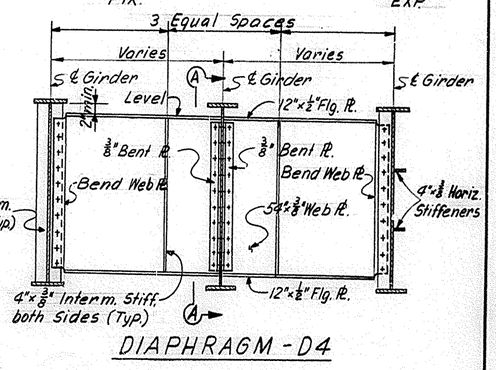

DIAPHRAGM - D4

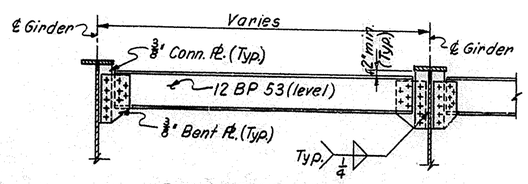

DIAPHRAGM - D2

NO CAMBER FOR SPAN 1 & SPAN 7

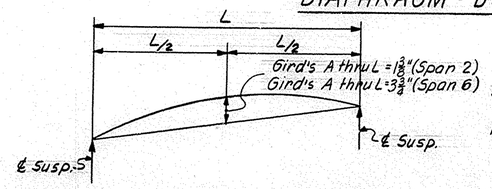

CAMBER DIAGRAM
SPAN 2 & SPAN 6

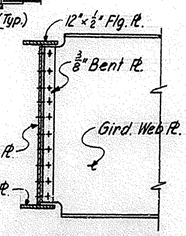

SECTION A-A

STRUCTURAL STEEL

BRIDGE OVER NORTH WESTERN PARKWAY AND 22ND STREET

SHEET 32 OF 63.

COMMONWEALTH OF KENTUCKY
DEPARTMENT OF HIGHWAYS
FRANKFORT
COUNTY OF
JEFFERSON

I 64-CEDAR GROVE TERRACE TO 13TH STREET
LOUISVILLE-LEXINGTON ROAD

STATION 146+90 PROJECT NO. I 64-2(34)1 S.P. 56-273-IIL

BRIDGE NUMBER | DRAWING NO. 17123 | INDEX

DESIGNED BY: DATE: REVISED:
CHECKED BY: DATE: REVISED:
DETAILED BY: HAS. 2-23-66 CHECKED BY: R. LIN DATE: 3-66 REVISED:
TRACED BY: CHECKED BY: DATE: REVISED:

GIETSCH NO. 138-8 ABCPROOF

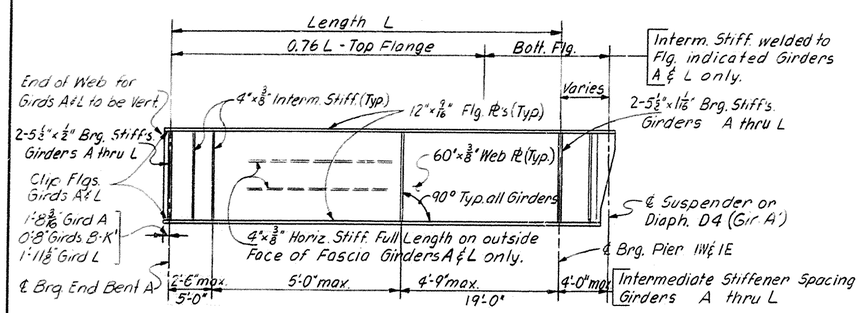

ELEVATION GIRDERS A THRU L
Span 1W & 1E

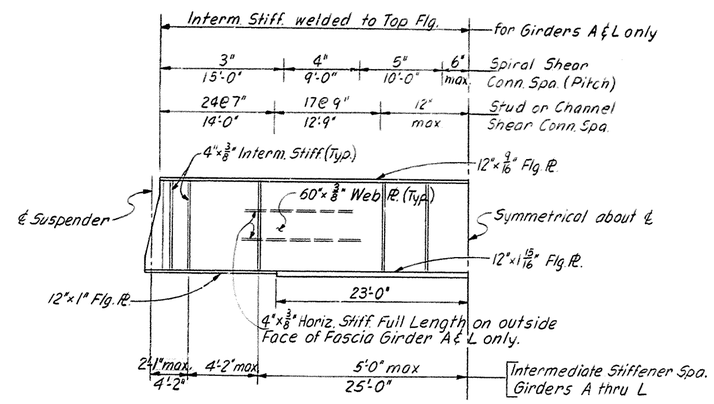

ELEVATION GIRDERS A THRU L
Half Span 2W & 2E

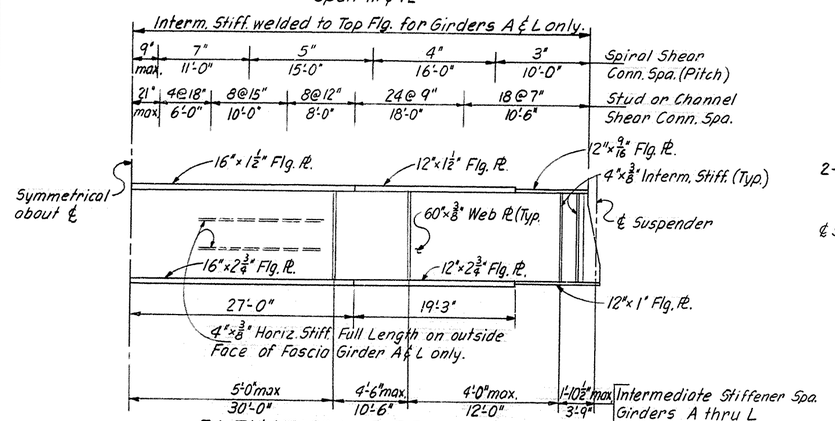

ELEVATION GIRDERS A THRU L
Half Span 6W & 6E

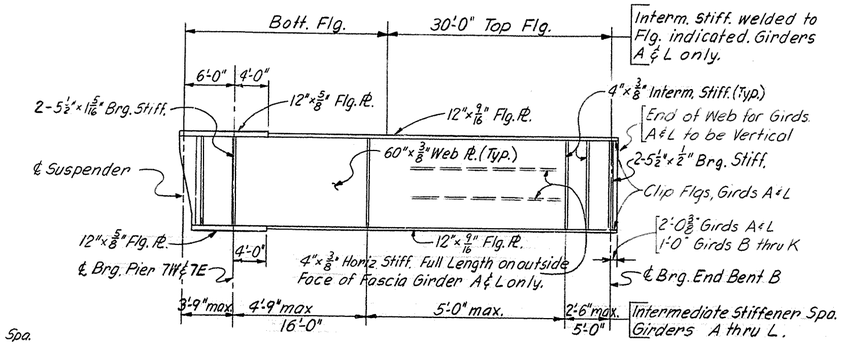

ELEVATION GIRDER A THRU L
Span 7W & 7E

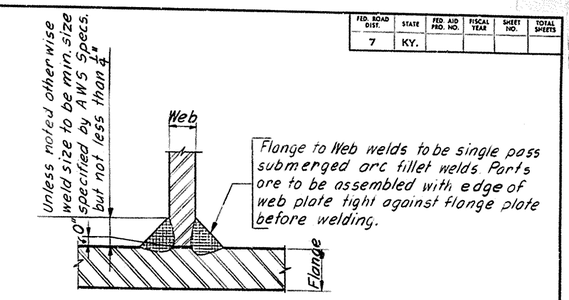

FLANGE TO WEB WELD

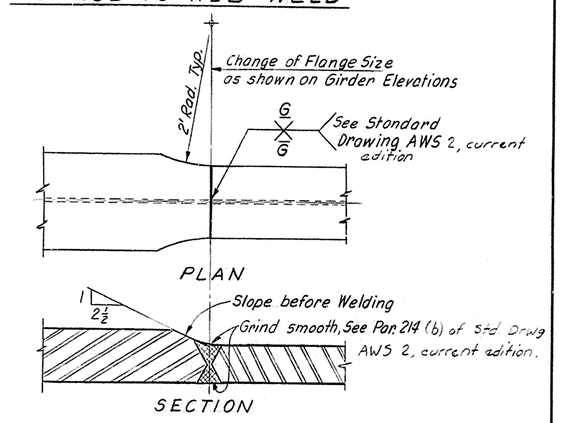

SHOP FLANGE SPLICE DETAIL

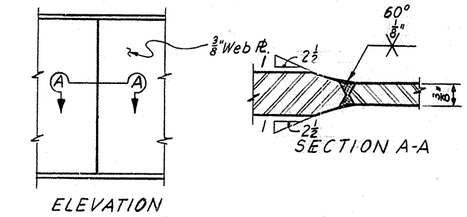

SHOP WEB SPLICE

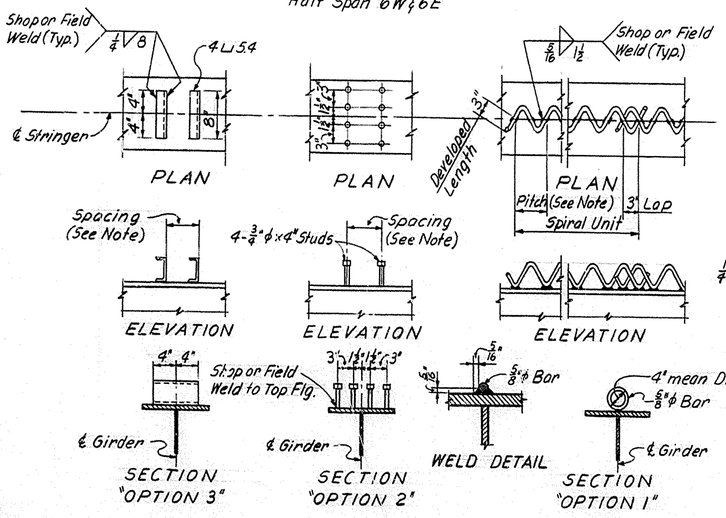

SHEAR CONNECTOR DETAILS

NOTE: Adjust Shear Connectors from the area of Type I & Type II Deck Drains.

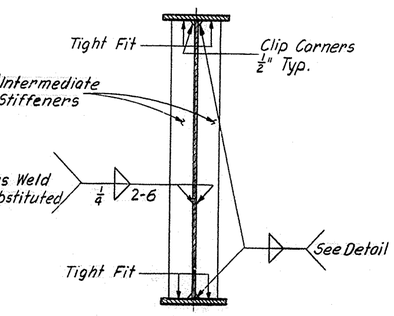

INTERMEDIATE STIFFENER DETAILS
INTERIOR GIRDERS

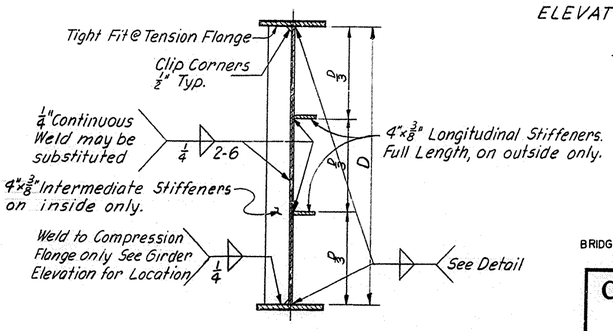

INTERMEDIATE STIFFENER DETAILS
FASCIA GIRDERS

FED. ROAD DIST.	STATE	FED. AID PRO. NO.	FISCAL YEAR	SHEET NO.	TOTAL SHEETS
7	KY.				

BRIDGE OVER NORTH WESTERN PARKWAY AND 22ND STREET

SHEET 33 OF 63

COMMONWEALTH OF KENTUCKY
DEPARTMENT OF HIGHWAYS
FRANKFORT
COUNTY OF
JEFFERSON
I 64-CEDAR GROVE TERRACE TO 13TH STREET
LOUISVILLE-LEXINGTON
ROAD

STATION 146 + 90 **PROJECT NO.** I 64-2(34)1 S.P. 56-273-11L

BRIDGE NUMBER | DRAWING NO. 17123 | INDEX

STRUCTURAL STEEL

DESIGNED BY: HAS 1-12-66 CHECKED BY: R. LIN DATE 3-66 REVISED DATE
DETAILED BY: DATE REVISED DATE
TRACED BY: CHECKED BY: DATE REVISED DATE

DIETZGEN NO. 138-3 ABEPROOF

FED. ROAD DIST.	STATE	FED. AID PRO. NO.	FISCAL YEAR	SHEET NO.	TOTAL SHEETS
7	KY.				

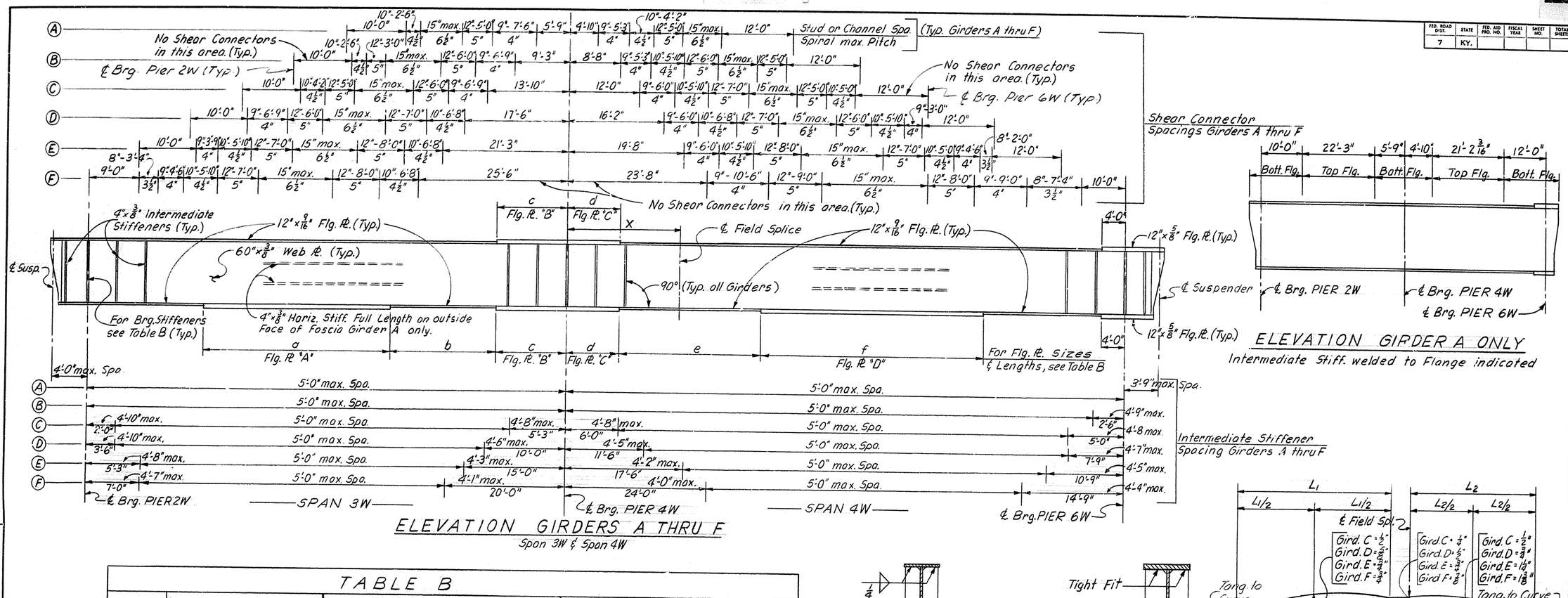

ELEVATION GIRDER A ONLY

Intermediate Stiff. welded to Flange indicated

ELEVATION GIRDERS A THRU F

Span 3W & Span 4W

TABLE B												
GIRDER	FLANGE PLATE SIZES				FLANGE PLATE LENGTHS						BEARING STIFFENERS			FIELD SPLICES
	"A"	"B"	"C"	"D"	a	b	c	d	e	f	Pier 2W	Pier 4W	Pier 6W	Dist. X
A	12"x9/16"	12"x9/16"	12"x9/16"	12"x9/16"	—	—	—	—	—	—	5 1/2"x15/16"	5 1/2"x1/2"	5 1/2"x1 1/4"	—
B	12"x9/16"	12"x9/16"	12"x9/16"	12"x9/16"	—	—	—	—	—	—	5 1/2"x15/16"	5 1/2"x5/8"	5 1/2"x1 5/16"	—
C	12"x9/16"	12"x9/16"	12"x9/16"	12"x9/16"	—	—	—	—	—	—	5 1/2"x1"	5 1/2"x13/16"	5 1/2"x1 3/8"	12'-6"
D	12"x11/16"	12"x13/16"	12"x13/16"	12"x9/16"	—	—	7'-6"	6'-6"	—	—	5 1/2"x1"	5 1/2"x1"	5 1/2"x1 3/8"	14'-6"
E	12"x9/16"	16"x15/16"	16"x15/16"	12"x15/16"	—	—	14'-0"	11'-0"	17'-0"	36'-0"	5 1/2"x1 1/16"	7 1/2"x7/8"	5 1/2"x1 7/16"	17'-0"
F	12"x13/16"	16"x1 1/4"	16"x1 1/4"	12"x1 3/8"	33'-0"	8'-0"	20'-6"	17'-6"	14'-0"	41'-0"	5 1/2"x1 1/16"	7 1/2"x1 1/16"	5 1/2"x1 1/2"	19'-0"

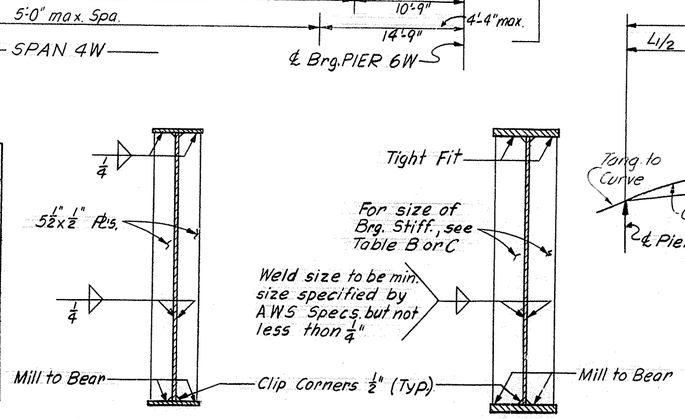

TYPICAL AT END BENT A, B, RB & PIER No. R3

TYPICAL AT PIER No. 1, 2, 3, 4, 5, 6, 7, R1 & R2

BEARING STIFFENER DETAILS

NOTE:
Bearing Stiffeners are to be assembled in a true vertical position.

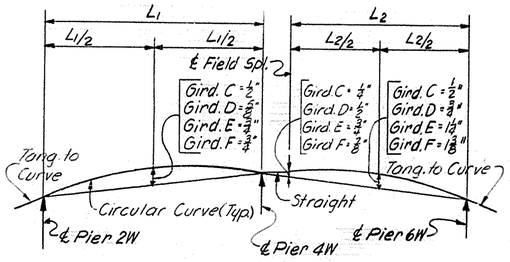

CAMBER DIAGRAM
SPAN, 3W & SPAN, 4W

For Girders C, D, E & F

No Camber for Girders A & B

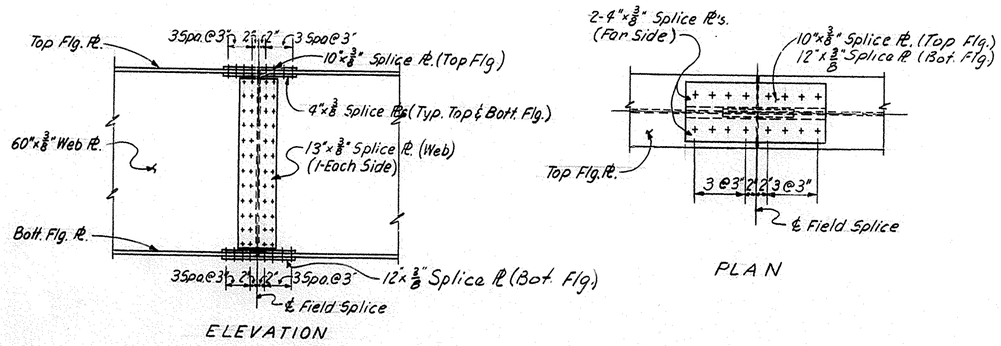

TYPICAL FIELD SPLICE

STRUCTURAL STEEL

BRIDGE OVER NORTH WESTERN PARKWAY AND 22ND STREET

SHEET 34 OF 63

COMMONWEALTH OF KENTUCKY
DEPARTMENT OF HIGHWAYS
FRANKFORT
COUNTY OF
JEFFERSON
164-CEDAR GROVE TERRACE TO 13TH STREET
LOUISVILLE-LEXINGTON
ROAD S.P. 56-273 IIL

STATION 146+90 **PROJECT NO.** 164-2(34)1

BRIDGE NUMBER | DRAWING NO. 17123 | INDEX

DESIGNED BY: | CHECKED BY: | DATE: | REVISED: | DATE:
DETAILED BY: HAS, 3-30-66 | CHECKED BY: R. LIN | DATE: 4-66 | REVISED: | DATE:
TRACED BY: | CHECKED BY: | DATE: | REVISED: | DATE:

3BW

FED. ROAD DIST.	STATE	FED. AID PROJ. NO.	FISCAL YEAR	SHEET NO.	TOTAL SHEETS
7	KY.				

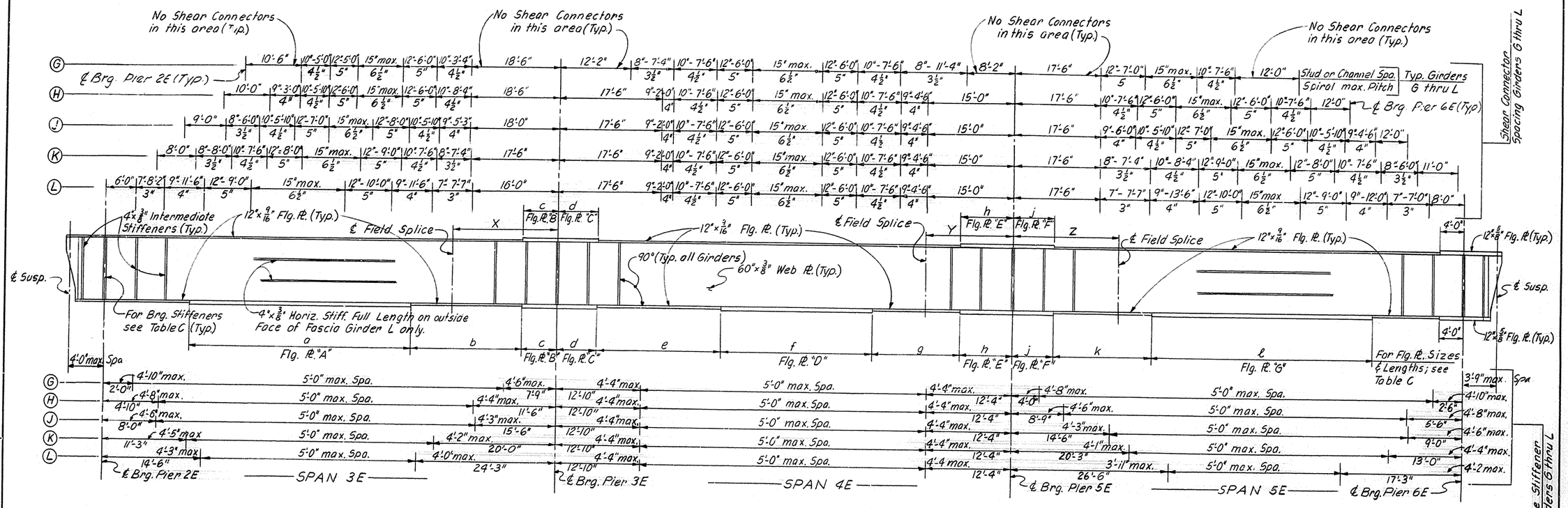

ELEVATION GIRDERS G THRU L

Span 3E, Span 4E & Span 5E

TABLE C

GIRDER	FLANGE PLATE SIZES "A"	"B"	"C"	"D"	"E"	"F"	"G"	FLANGE PLATE LENGTHS a	b	c	d	e	f	g	h	j	k	ℓ	BEARING STIFFENERS Pier 2E	Pier 3E	Pier 5E	Pier 6E	FIELD SPLICES X	Y	Z
G	12"×9/16"	12"×3/4"	12"×3/4"	12"×3/4"	12"×9/16"	12"×9/16"	12"×9/16"	—	—	7'-0"	5'-6"	18'-6"	30'-0"	—	—	—	—	—	5 1/2"×1"	5 1/2"×1"	5 1/2"×7/8"	5 1/2"×1 5/16"	18'-6"	8'-6"	—
H	12"×9/16"	12"×15/16"	12"×15/16"	12"×5/8"	12"×13/16"	12"×13/16"	12"×9/16"	—	—	8'-0"	8'-0"	24'-0"	14'-0"	26'-0"	6'-0"	6'-0"	—	—	5 1/2"×1 1/16"	5 1/2"×1 1/16"	5 1/2"×1"	5 1/2"×1 3/8"	18'-6"	15'-0"	—
J	12"×7/8"	16"×13/16"	16"×13/16"	12"×9/16"	16"×13/16"	16"×13/16"	12"×13/16"	32'-0"	19'-0"	9'-0"	12'-0"	—	—	—	11'-0"	9'-0"	19'-0"	32'-0"	5 1/2"×1 1/8"	7 1/2"×13/16"	7 1/2"×13/16"	5 1/2"×1 1/16"	18'-0"	—	18'-0"
K	12"×1 1/4"	16"×15/16"	16"×15/16"	12"×9/16"	16"×1"	16"×1"	12"×1 1/4"	46'-0"	15'-0"	10'-0"	15'-6"	—	—	—	16'-0"	11'-0"	14'-0"	47'-6"	5 1/2"×1 1/4"	7 1/2"×7/8"	7 1/2"×7/8"	5 1/2"×1 1/2"	17'-0"	—	17'-6"
L	12"×1 5/8"	16"×1 1/16"	16"×1 1/16"	12"×9/16"	16"×1 3/16"	16"×1 3/16"	12"×1 3/4"	58'-0"	13'-0"	11'-0"	19'-0"	—	—	—	21'-0"	12'-0"	13'-0"	61'-0"	5 1/2"×1 5/16"	7 1/2"×15/16"	7 1/2"×1"	5 1/2"×1 9/16"	16'-0"	—	17'-0"

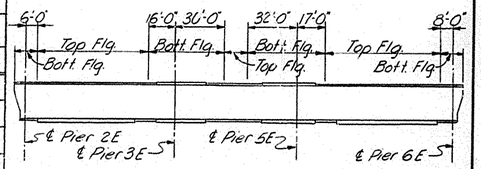

ELEVATION GIRDER L ONLY

Intermediate Stiff. to be welded to Flange indicated.

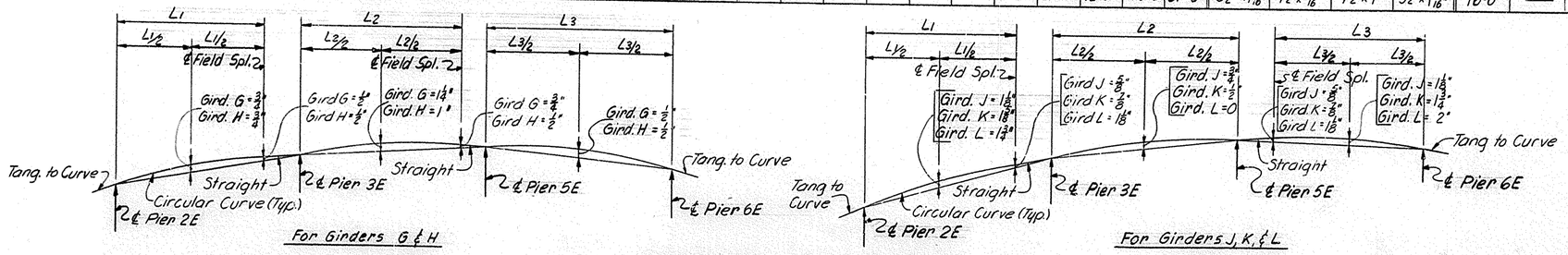

CAMBER DIAGRAMS

SPANS 3E, 4E & 5E

STRUCTURAL STEEL

BRIDGE OVER NORTH WESTERN PARKWAY AND 22ND STREET

SHEET 35 OF 63

COMMONWEALTH OF KENTUCKY
DEPARTMENT OF HIGHWAYS
FRANKFORT
COUNTY OF
JEFFERSON

I 64-CEDAR GROVE TERRACE TO 13TH STREET
LOUISVILLE-LEXINGTON
ROAD

STATION 146+90 — PROJECT NO. I 64-2(34) I — S.P. 56-273-IIL

BRIDGE NUMBER — DRAWING NO. 17123 — INDEX

DESIGNED BY: — CHECKED BY: — DATE — REVISED
DETAILED BY: HAS 3-30-66 — CHECKED BY: R. LIN — DATE 3-66 — REVISED
TRACED BY: — CHECKED BY: — DATE — REVISED

FED. ROAD DIST.	STATE	FED. AID PROJ. NO.	FISCAL YEAR	SHEET NO.	TOTAL SHEETS
7	KY.				

NOTE:
Detail-A similar to Detail-A
Sheet No. 31

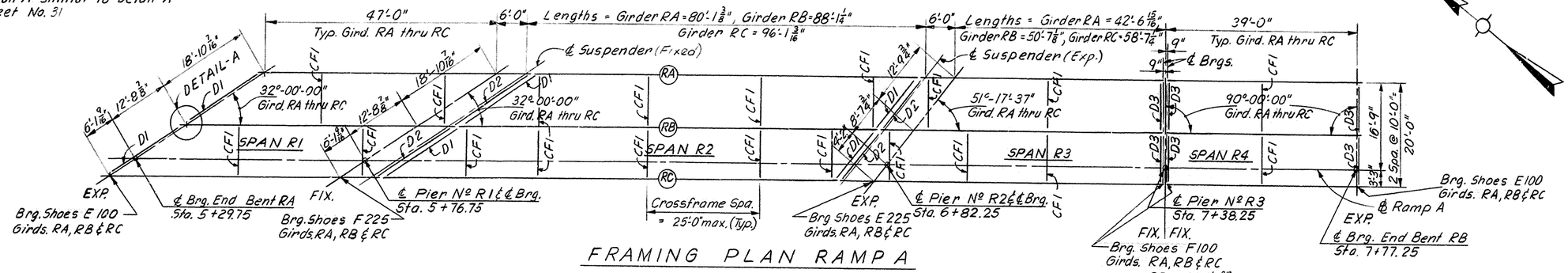

FRAMING PLAN RAMP A

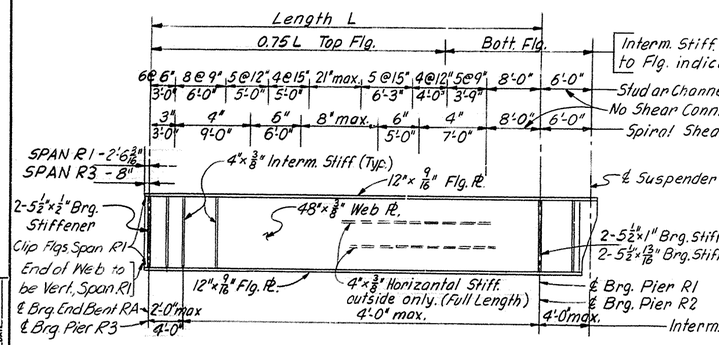

ELEVATION GIRDER RA
Span R1 shown, Span R3 opposite hand

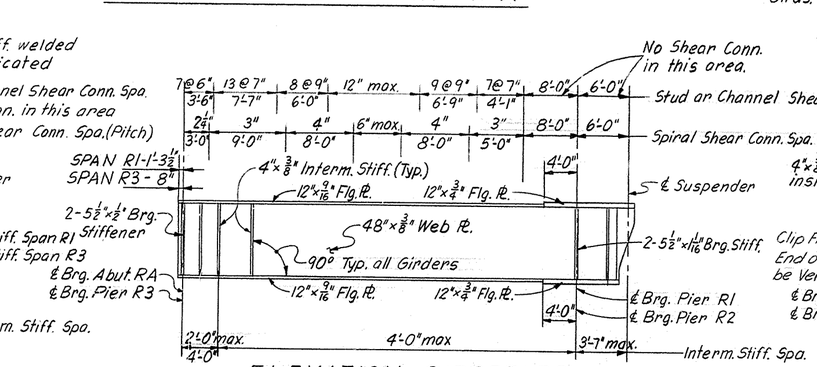

ELEVATION GIRDER RB
Span R1 shown, Span R3 opposite hand

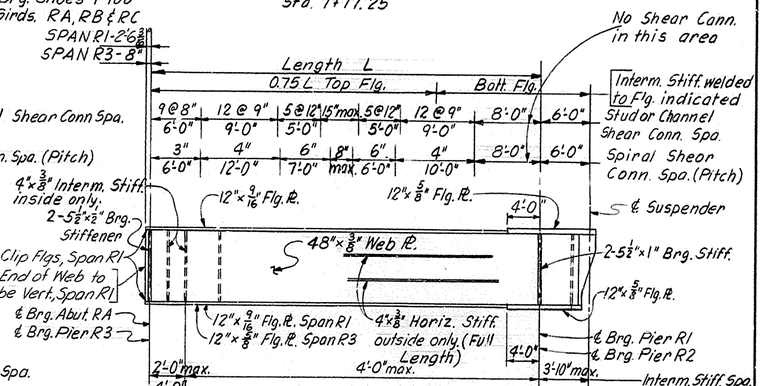

ELEVATION GIRDER RC
Span R1 shown, Span R3 opposite hand

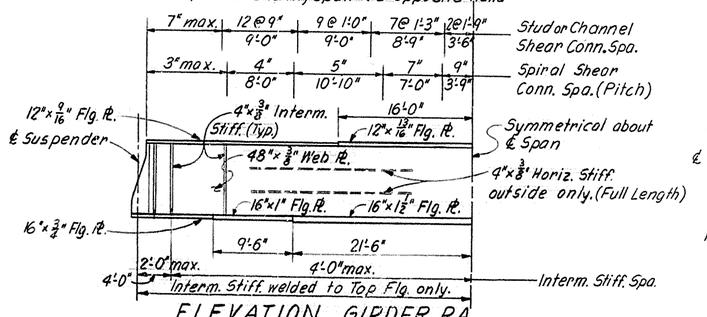

ELEVATION GIRDER RA
Half Span R2

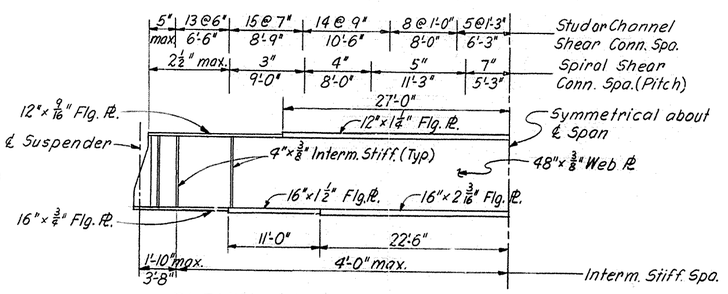

ELEVATION GIRDER RB
Half Span R2

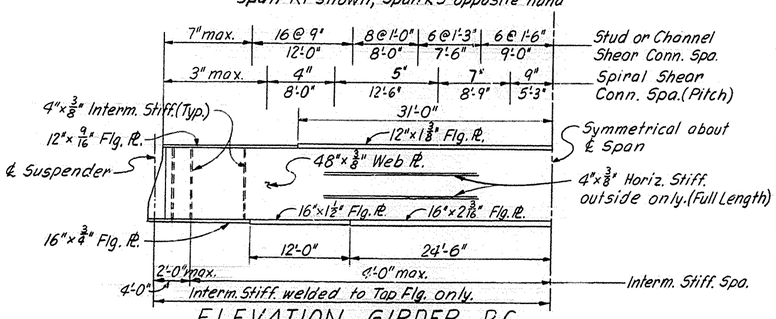

ELEVATION GIRDER RC
Half Span R2

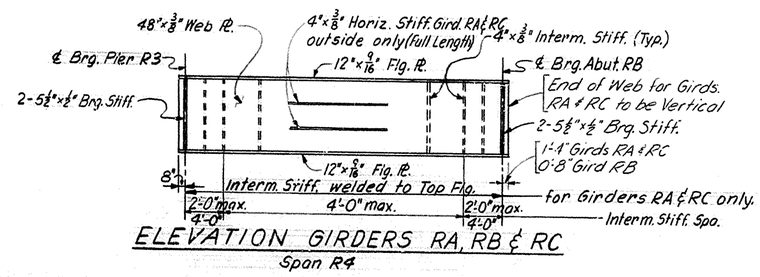

ELEVATION GIRDERS RA, RB & RC
Span R4

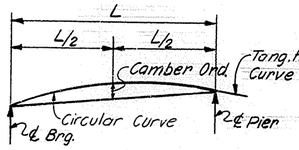

CAMBER DIAGRAM
SPAN, R1 & SPAN, R3

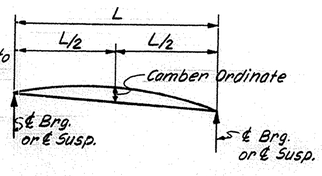

CAMBER DIAGRAM
SPAN, R2 & SPAN, R4

CAMBER ORDINATES

Span \ Gird.	RA	RB	RC
R1	3/4"	3/4"	3/4"
R2	3 1/2"	4 1/2"	5 5/8"
R3	5/8"	1"	1 1/2"
R4	7/8"	7/8"	7/8"

STRUCTURAL STEEL

BRIDGE OVER NORTH WESTERN PARKWAY AND 22ND STREET

SHEET 36 OF 63

COMMONWEALTH OF KENTUCKY
DEPARTMENT OF HIGHWAYS
FRANKFORT
COUNTY OF
JEFFERSON
164-CEDAR GROVE TERRACE TO 13TH STREET
LOUISVILLE-LEXINGTON ROAD
S.P. 56-273-11L
STATION 146+90
PROJECT NO. 164-2(34)1
BRIDGE NUMBER
DRAW. NO. NO. 17123
INDEX

DESIGNED BY
DETAILED BY HAS 1-6-66
TRACED BY
CHECKED BY
CHECKED BY
CHECKED BY
DATE
REVISED
DATE 3-66
R. LIN
DATE
REVISED
DATE
REVISED
DATE
REVISED

98W

GIETGEY NO. 139-3 ABEPROOF

FED. ROAD DIST.	STATE	FED. AID PRO. NO.	FISCAL YEAR	SHEET NO.	TOTAL SHEETS
7	KY.				

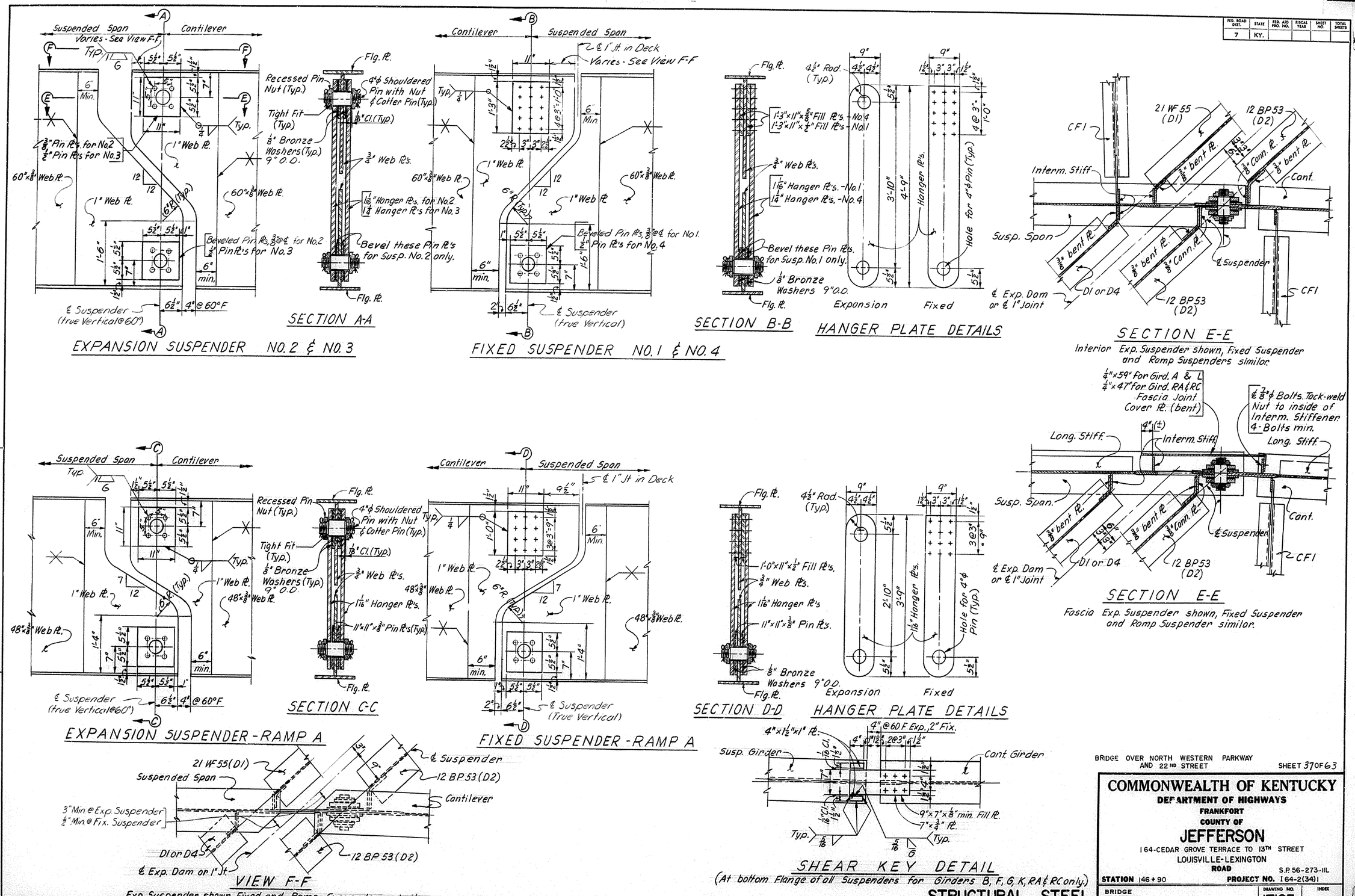

BRIDGE OVER NORTH WESTERN PARKWAY AND 22ND STREET

SHEET 37 OF 63

COMMONWEALTH OF KENTUCKY
DEPARTMENT OF HIGHWAYS
FRANKFORT
COUNTY OF
JEFFERSON
164-CEDAR GROVE TERRACE TO 13TH STREET
LOUISVILLE-LEXINGTON
ROAD

STATION 146 + 90 **PROJECT NO.** 164-2(34)1 S.P. 56-273-IIL

BRIDGE NUMBER

DRAWING NO. 17123

INDEX

DESIGNED BY HAS CHECKED BY
DETAILED BY R. LIN CHECKED BY
TRACED BY CHECKED BY
DATE 2-66 REVISED DATE

FED. ROAD DIST.	STATE	FED. AID PROJ. NO.	FISCAL YEAR	SHEET NO.	TOTAL SHEETS
7	KY.				

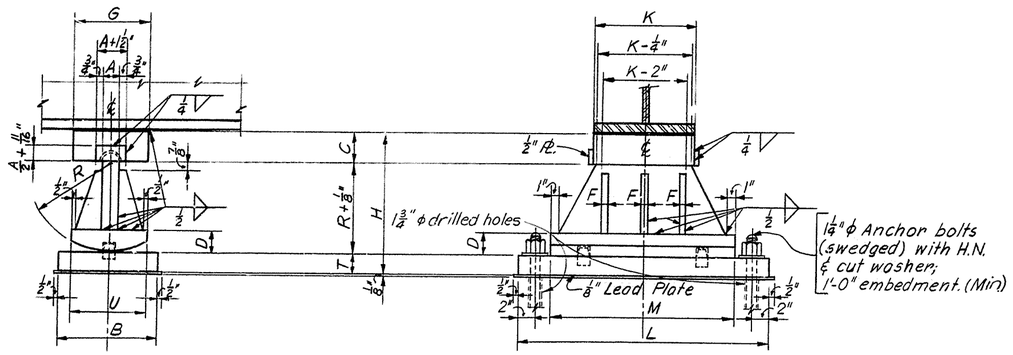

EXPANSION SHOE

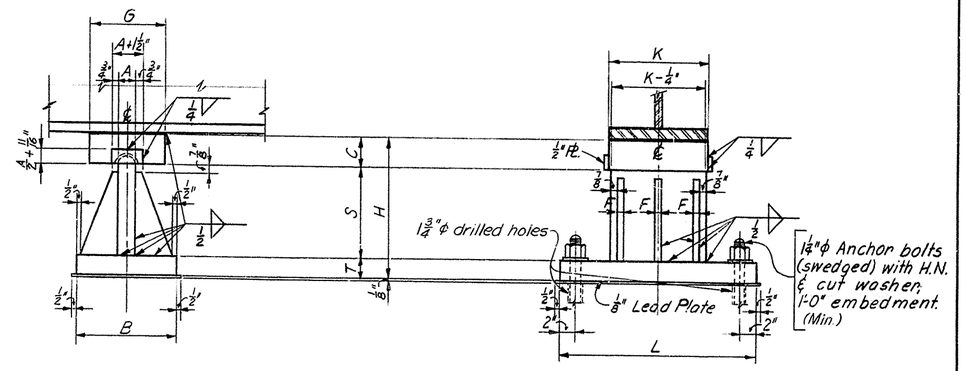

FIXED SHOE

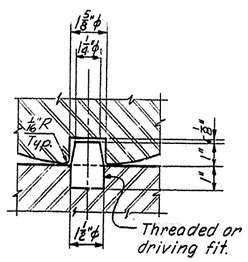

PINTLE DETAIL

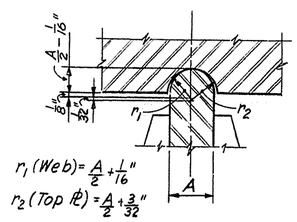

TOP BEARING DETAIL

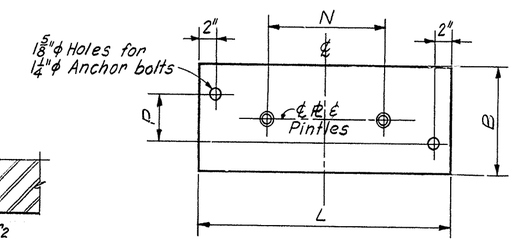

BOTTOM PLATE WITH PINTLES (EXP)

BOTTOM PLATE W/OUT PINTLES (FIX.)

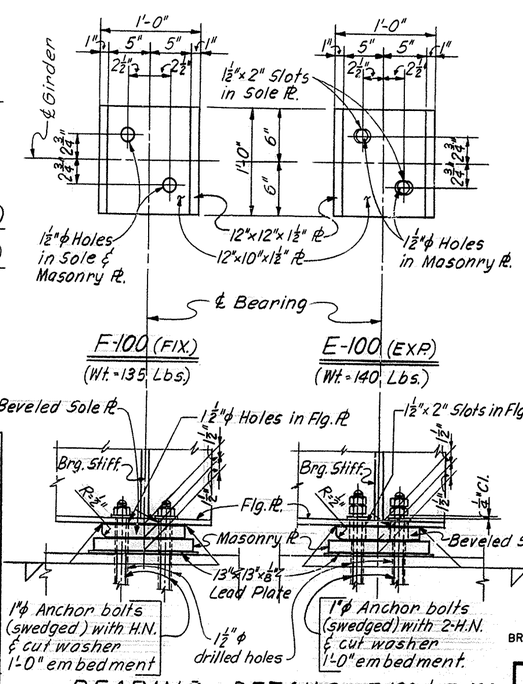

BEARING DETAILS F-100 & E-100

NOTES:

Plates must be true and free of warp.

The cost of lead required to set Anchor Bolts and the cost of drilling Anchor Bolt holes shall be included in the Lump Sum Bid for Structural Steel.

The Contractors shall be responsible for keeping holes dry in wet and freezing weather. At the time of setting, Anchor Bolts are to be heated to a blue heat to assure free flow of lead to bottom of hole.

EXPANSION-SHOE Mark	Wt. (lbs.)	A	B	C	D	F	G	H	K	L	M	N	P	R	T	U			1¼" ϕ ANCHOR BOLT (Lgth.)	MAXIMUM LOAD (lbs.)
		DIMENSIONS (INCHES)																		
E-225	475	2	10	3½	2¼	¾	9	14¼	12	30	22	14	3	8⅞	1¾	9			1'-5"	225,000
E-250	535	↑	11	3¾	2½	↑	↑	15½	12	↑	↑	↑	4	9⅝	2	10			↑	250,000
E-275A	615		12	3¾	2¾			16¾	12				5	10⅝	2¼	11				275,000
E-275B	650		12	3½	2¾			16½	16				5	10⅝	2¼	11				275,000
E-300	685	↓	13	4	3	¾	↓	18	12	↓	↓	↓	6	11⅝	2¼	12			↓	300,000
E-325	755	2	14	4	3	1	9	19¼	12	30	22	14	7	12⅝	2½	12			1'-5"	325,000

FIXED-SHOE Mark	Wt. (lbs.)	A	B	C	F	G	H	K	L	P	S	T							1¼" ϕ ANCHOR BOLT (Lgth)	MAXIMUM LOAD (lbs)
		DIMENSIONS (INCHES)																		
F-225	370	2	11	3½	¾	9	14¾	12	21	4	9	2¼							1'-5"	225,000
F-250	430	↑	11	3¼	↑	↑	15	16	24	4	9¾	2							↑	250,000
F-275A	460	↓	13	3¾	↓	↓	17	12	22	6	10¾	2½								275,000
F-275B	470	2	12	3½	¾	9	16¼	16	24	5	10¾	2							1'-5"	275,000

Shoe Weights shown include Lead Plates, Lead for Anchor Bolt Settings and Anchor Bolts.

BRIDGE OVER NORTH WESTERN PARKWAY AND 22ND STREET

SHEET 38 OF 63

COMMONWEALTH OF KENTUCKY
DEPARTMENT OF HIGHWAYS
FRANKFORT
COUNTY OF
JEFFERSON
I 64-CEDAR GROVE TERRACE TO 13TH STREET
LOUISVILLE-LEXINGTON
ROAD S.P. 56-273-IIL

STATION 146+90 **PROJECT NO.** I 64-2(34) I

BRIDGE NUMBER — DRAWING NO. 17123 — INDEX

STRUCTURAL STEEL

DESIGNED BY: DATE: REVISED: DATE:
DETAILED BY: HAS DATE: 2-66 REVISED: DATE:
CHECKED BY: DMB DATE: 3-10-66 REVISED: DATE:
TRACED BY: CHECKED BY: DATE: REVISED: DATE:

38W

FED. ROAD DIST.	STATE	FED. AID PROJ. NO.	FISCAL YEAR	SHEET NO.	TOTAL SHEETS
7	KY.				

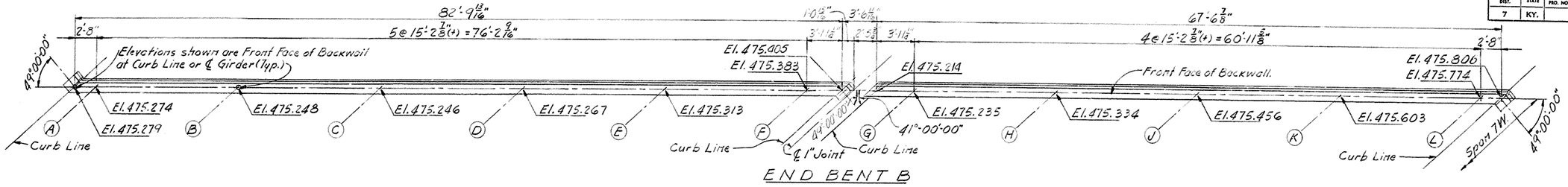

END BENT B

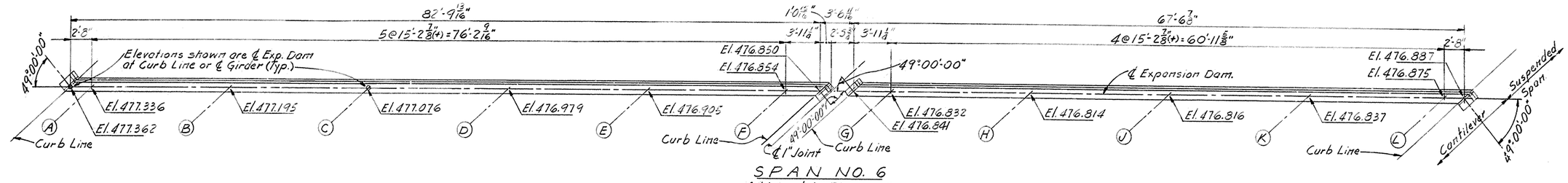

SPAN NO. 6
Adjacent to Pier No. 6

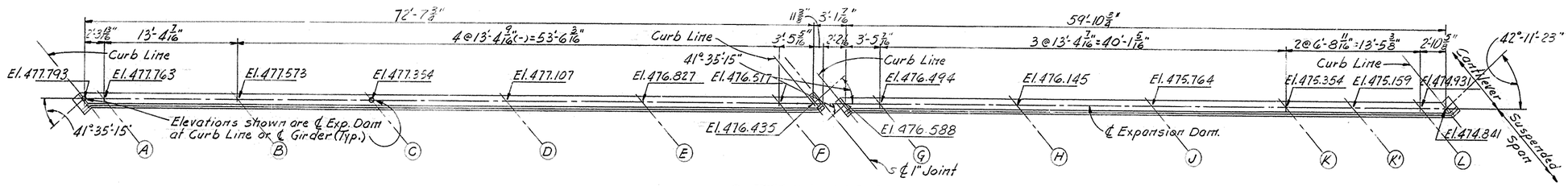

SPAN NO. 2
Adjacent to Pier No. 2

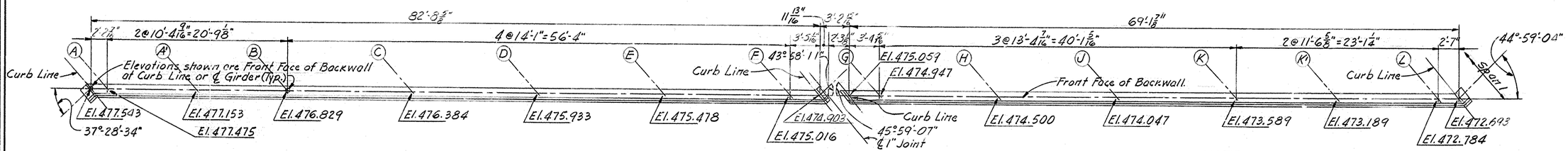

END BENT A

NOTE:
The cost of the Expansion Dams including bolts and nuts, shall be included in the lump sum bid for structural steel. Such payment shall be complete compensation for all materials, equipment, tools, labor, and incidentals to complete the work.

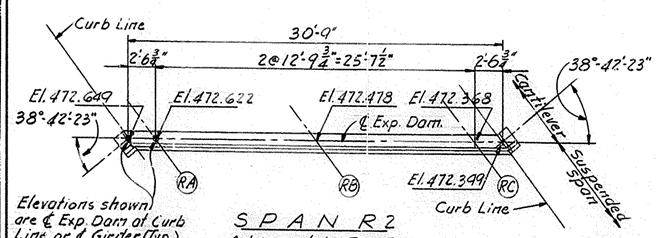

SPAN R2
Adjacent to Pier R2

NOTE:
Elevations shown are screed Elevations and may be used for final erection of the Expansion Dams before the concrete slab is poured.

For details of Expansion Dams in Span No. 2, 6 & R2 see Sheet No. 40

For details of Expansion Dams at End Bents A, B & RA see Sheet No. 41

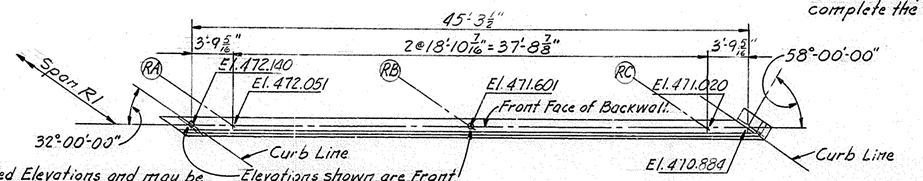

END BENT RA

Elevations shown are Front Face of Backwall at Curb Line or ℄ Girder (Typ.)

BRIDGE OVER NORTH WESTERN PARKWAY AND 22ND STREET

SHEET 39 OF 63

COMMONWEALTH OF KENTUCKY
DEPARTMENT OF HIGHWAYS
FRANKFORT
COUNTY OF
JEFFERSON
I64-CEDAR GROVE TERRACE TO 13TH. STREET
LOUISVILLE-LEXINGTON
ROAD

STATION 146+90 | PROJECT NO. I64-2(34)1 | S.P. 56-273-11L

BRIDGE NUMBER | DRAWING NO. 17123 | INDEX

EXPANSION DAMS

DESIGNED BY L.M.H. | DETAILED BY | TRACED BY | CHECKED BY | CHECKED BY | REVISED | REVISED | REVISED | DATE

FED. ROAD DIST.	STATE	FED. AID PROJ. NO.	FISCAL YEAR	SHEET NO.	TOTAL SHEETS
7	KY.				

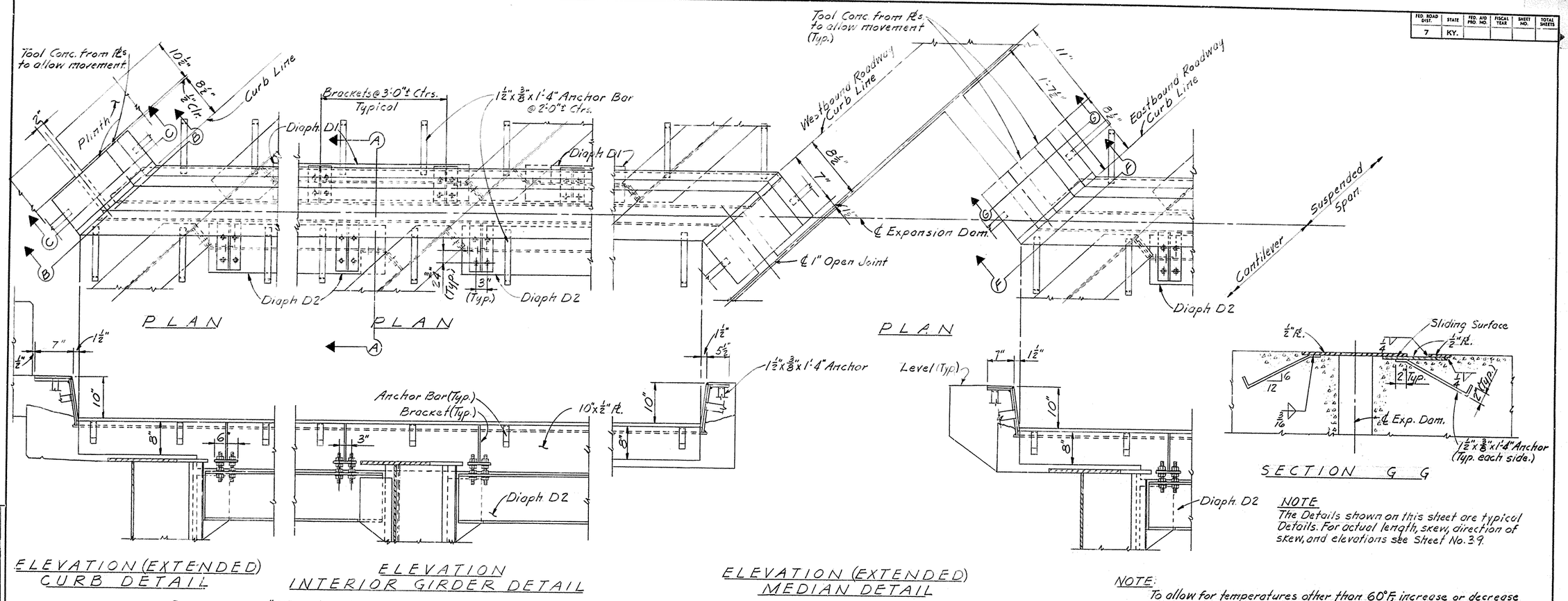

NOTE
The Details shown on this sheet are typical Details. For actual length, skew, direction of skew, and elevations see Sheet No. 39.

NOTE:
To allow for temperatures other than 60°F. increase or decrease respectively the dimensions shown for 60°F by ⅛" for each 10° decrease or increase in temperature.
Plates must be true and free from warp.
The Expansion Dams are to be assembled in the shop in their relative final positions and inspected for fit.
As an alternative the rear sealing compound retainer bar may be cut from a 2½"x1¾" bar in lieu of welding the two bars together.

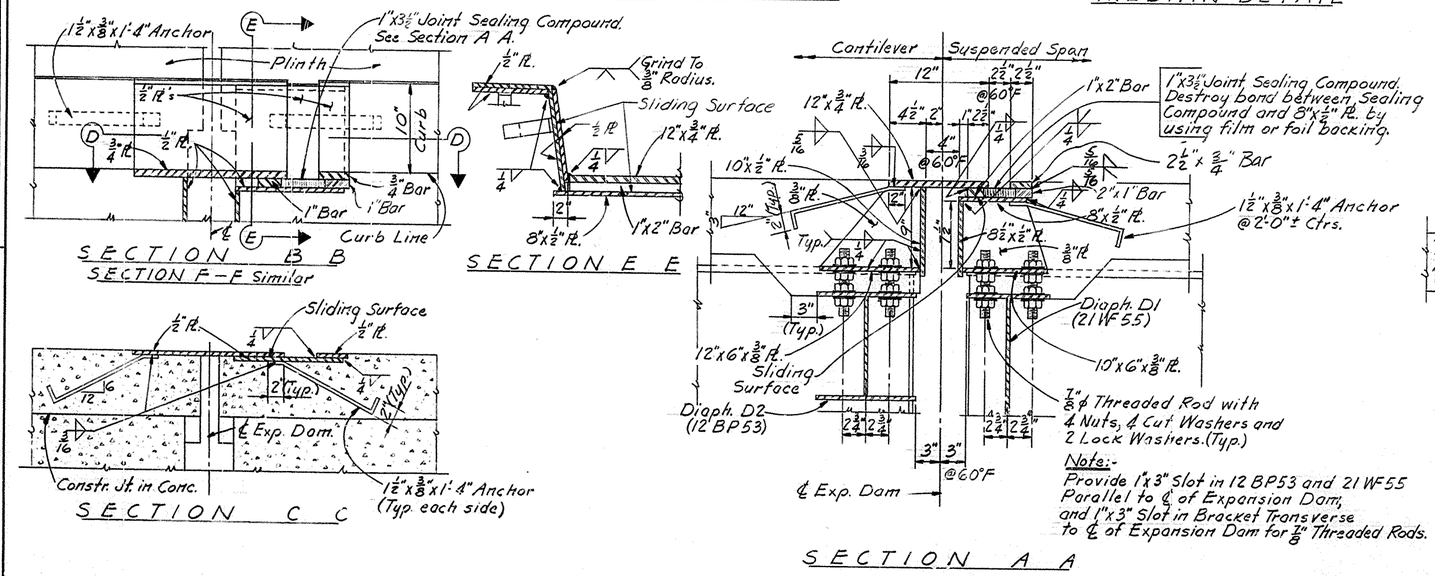

Note:-
Provide 1"x3" Slot in 12 BP53 and 21 WF55 Parallel to ℄ of Expansion Dam, and 1"x3" Slot in Bracket Transverse to ℄ of Expansion Dam for ⅞" Threaded Rods.

BRIDGE OVER NORTH WESTERN PARKWAY AND 22ND STREET

SHEET 40 OF 63

COMMONWEALTH OF KENTUCKY
DEPARTMENT OF HIGHWAYS
FRANKFORT
COUNTY OF
JEFFERSON
164-CEDAR GROVE TERRACE TO 13TH STREET
LOUISVILLE-LEXINGTON
ROAD SP 56-273-IIL

STATION 146+90 **PROJECT NO.** 164-2(34)1

BRIDGE NUMBER | DRAWING NO. 17123 | INDEX

EXPANSION DAM AT SUSPENDERS

DESIGNED BY: DATE: REVISED: DATE:
DETAILED BY: L. M. H. CHECKED BY: T.I.S. DATE: 2-56 REVISED: DATE:
TRACED BY: CHECKED BY: DATE: REVISED: DATE:

6-ETTSEN NO. 138-B ADERMOOF

FED. ROAD DIST.	STATE	FED. AID PROJ. NO.	FISCAL YEAR	SHEET NO.	TOTAL SHEETS
7	KY.				

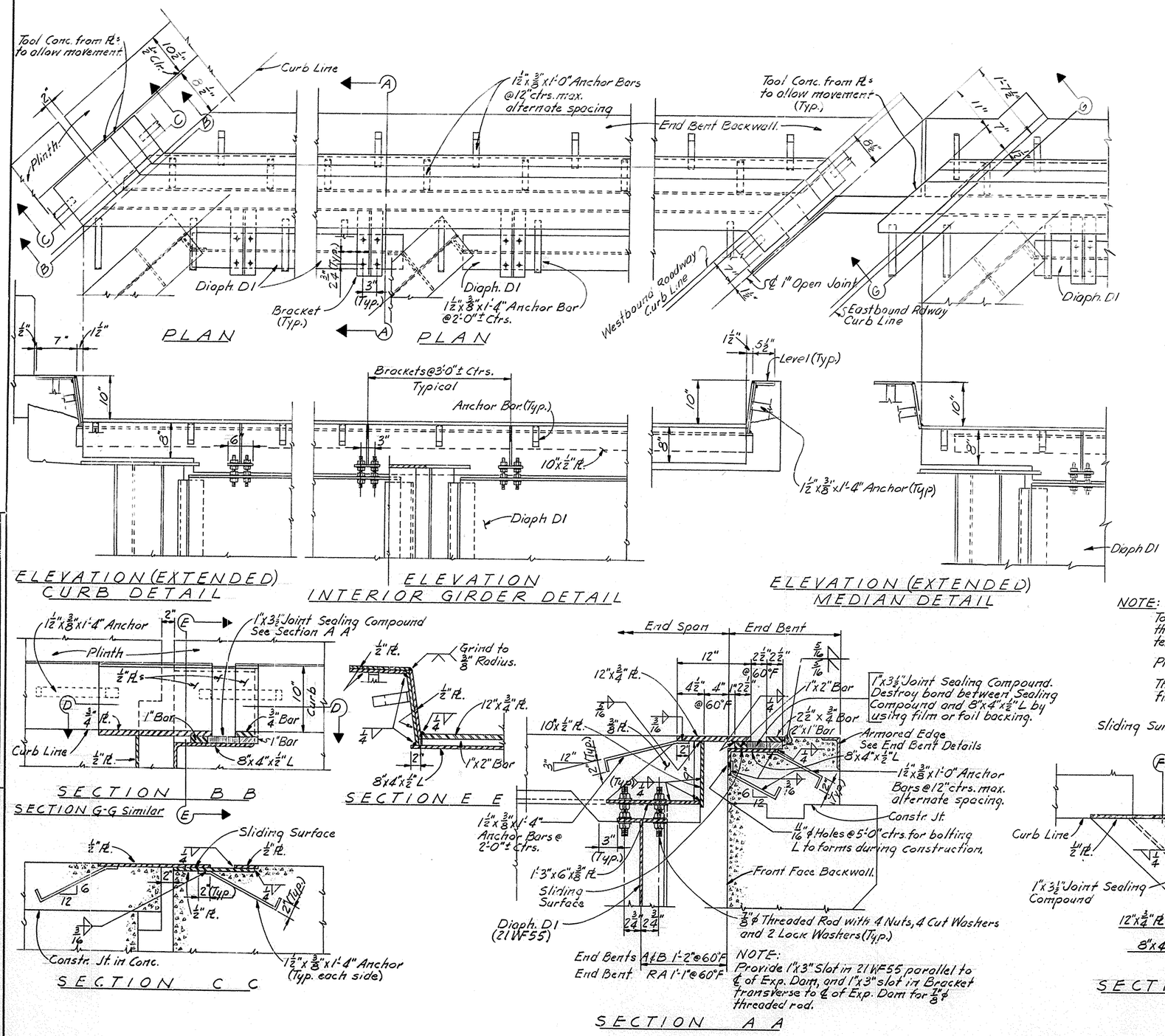

NOTE:
The Details shown on this sheet are typical Details. For actual length, skew, direction of skew, and elevations see Sheet No. 39.

NOTE:
Provide 1"x3" Slot in 21 WF55 parallel to ℄ of Exp. Dam, and 1"x3" slot in Bracket transverse to ℄ of Exp. Dam for ⅞" ϕ threaded rod.

NOTE:
To allow for temperatures other than 60°F increase or decrease respectively the dimensions shown for 60°F by 1/32" for each 10° decrease or increase in temperature.

Plates must be true and free from Warp.

The Expansion Dams are to be assembled in the shop in their relative final positions and inspected for fit.

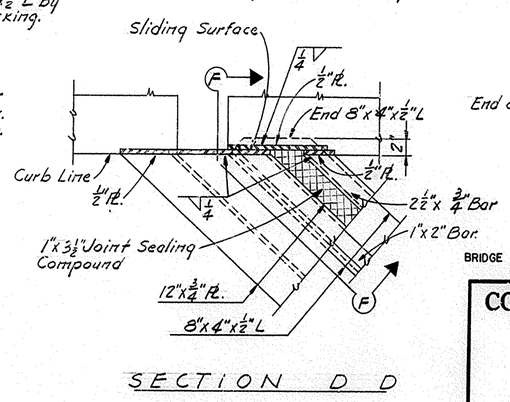

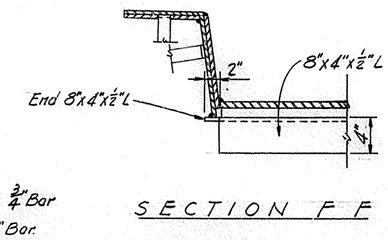

BRIDGE OVER NORTH WESTERN PARKWAY AND 22ND STREET

SHEET 41 OF 63

COMMONWEALTH OF KENTUCKY
DEPARTMENT OF HIGHWAYS
FRANKFORT
COUNTY OF
JEFFERSON
I64-CEDAR GROVE TERRACE TO 13TH STREET
LOUISVILLE-LEXINGTON
ROAD S.P. 56-273-111
STATION 146+90 **PROJECT NO.** I64-2(34)1

BRIDGE NUMBER | DRAWING NO. 17123 | INDEX

EXPANSION DAM AT END BENTS

DATE REVISED DATE REVISED DATE REVISED

DESIGNED BY CHECKED BY
DETAILED BY L.M.H. CHECKED BY F.G.
TRACED BY CHECKED BY

FED. ROAD DIST.	STATE	FED. AID PROJ. NO.	FISCAL YEAR	SHEET NO.	TOTAL SHEETS
7	KY.				

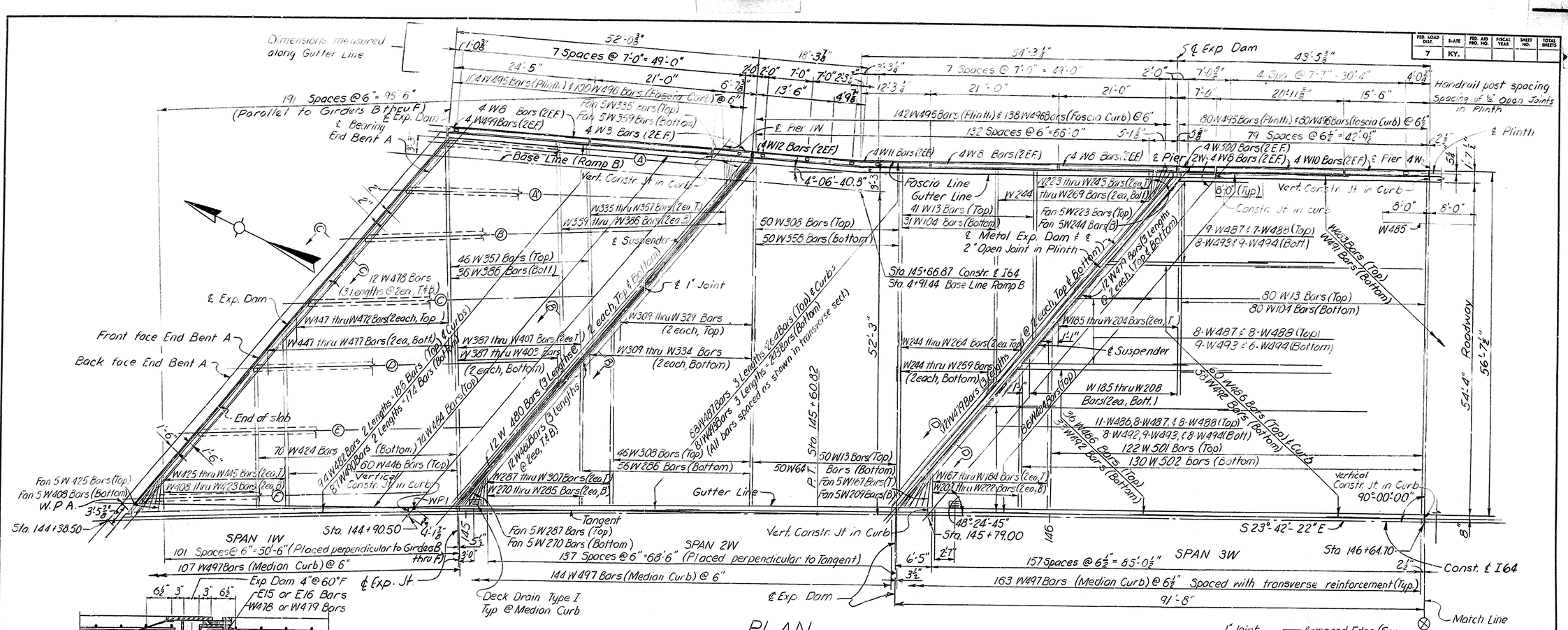

PLAN

I64 (W.B.) (SPANS 1W, 2W & 3W)

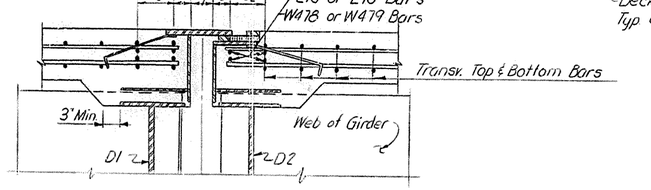

SECTION-DD

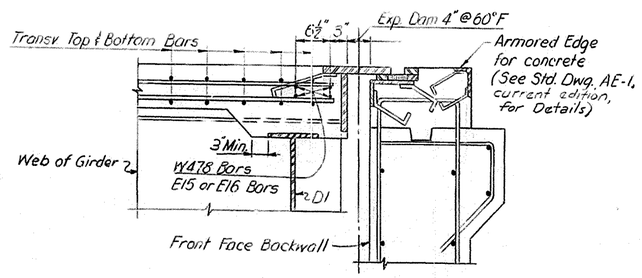

SECTION-CC

NOTES:

For Bill of Reinforcement, Bar Bending Details & Quantities see Sheets No. 48 thru 51.

For Deck Drain & Light Std. Support Reinforcement see Sheet No. 47

For Expansion Dam Details see Sheets No 39 thru 41.

For Guardrail Details see Sheet No. 54

E.F. denotes Each Face.

When setting Deck Drains with Type I downspout connections, adjust position longitudinally to insure downspout is centered 5" from the face of Pier. See Sheet No. 52.

The transverse construction joints in the curbs at the piers shall be edged with an approved tool.

The construction joints in the Median Wall at the piers shall have 1/2" "V" groove on sides and top.

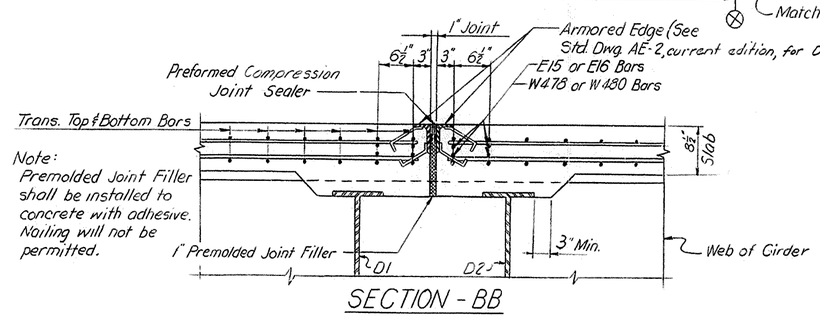

SECTION - BB

BRIDGE OVER NORTH WESTERN PARKWAY AND 22ND STREET

SHEET 42 OF 63

COMMONWEALTH OF KENTUCKY
DEPARTMENT OF HIGHWAYS
FRANKFORT
COUNTY OF
JEFFERSON
164-CEDAR GROVE TERRACE TO 13TH STREET
LOUISVILLE-LEXINGTON ROAD

S.P. 56-273-IIL

STATION 146 + 90 **PROJECT NO.** 164-2(34)1

BRIDGE NUMBER | DRAWING NO. 17123 | INDEX

SUPERSTRUCTURE

DESIGNED BY DMH 11-19-65 CHECKED BY HAS DATE 6-22-66 REVISED
DETAILED BY DATE REVISED
TRACED BY CHECKED BY DATE REVISED

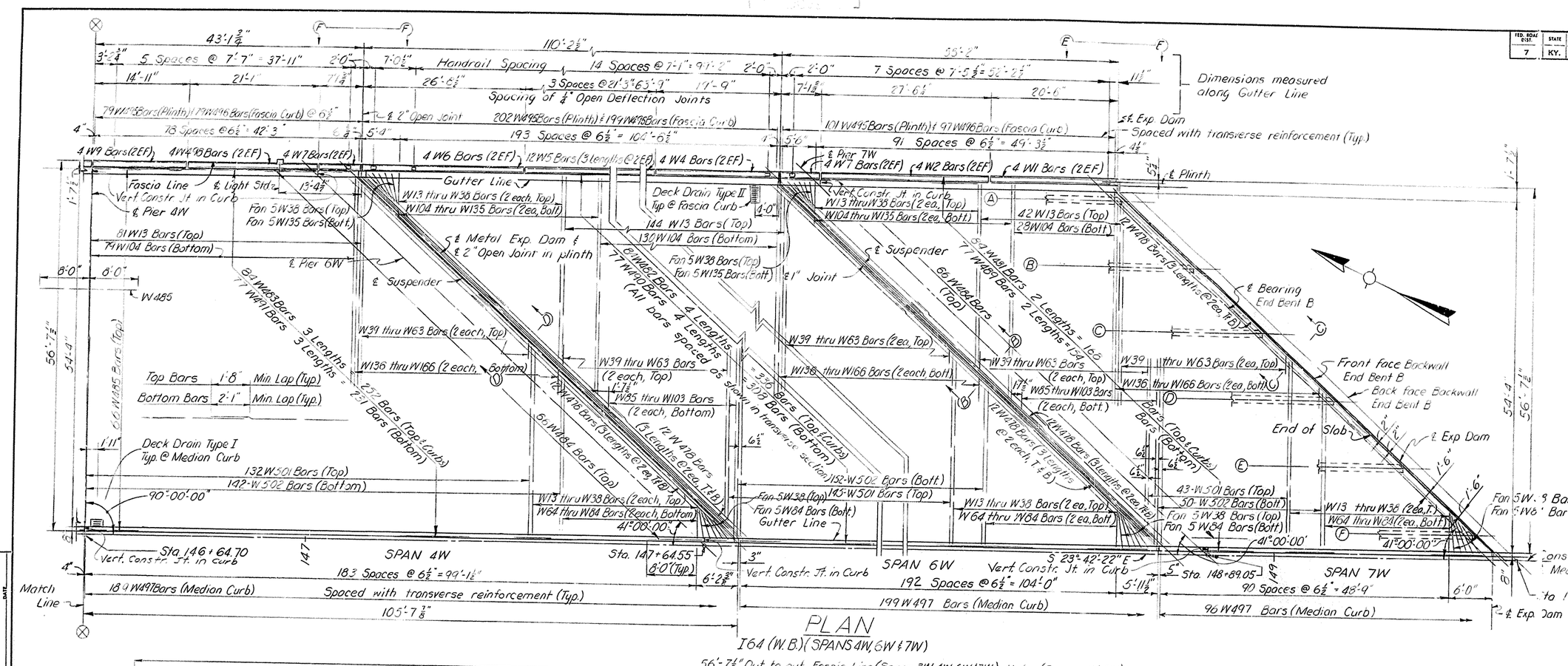

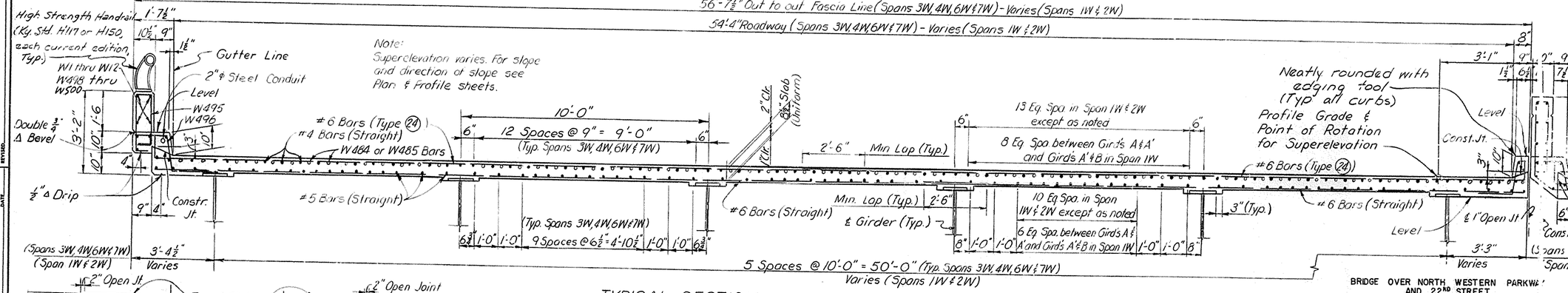

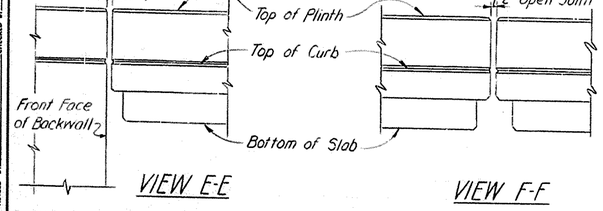

For notes see Sheet No. 42
For sections B-B, C-C & D-D see Sheet No. 42

BRIDGE OVER NORTH WESTERN PARKWAY AND 22ND STREET

COMMONWEALTH OF KENTUCKY
DEPARTMENT OF HIGHWAYS
FRANKFORT
COUNTY OF
JEFFERSON
I 64-CEDAR GROVE TERRACE TO 13TH
LOUISVILLE-LEXINGTON ROAD

STATION 146+90 PROJECT NO.

BRIDGE NUMBER

DRAWING 17

SUPERSTRUCTURE

FED. ROAD DIST. 7 STATE KY.

DESIGNED BY DMH CHECKED BY
DETAILED BY HAS CHECKED BY
TRACED BY CHECKED BY
DATE 11-15-66 DATE 4-22-68
REVISED DATE REVISED DATE REVISED DATE

FED. ROAD DIST.	STATE	FED. AID PROJ. NO.	FISCAL YEAR	SHEET NO.	TOTAL SHEETS
7	KY.				

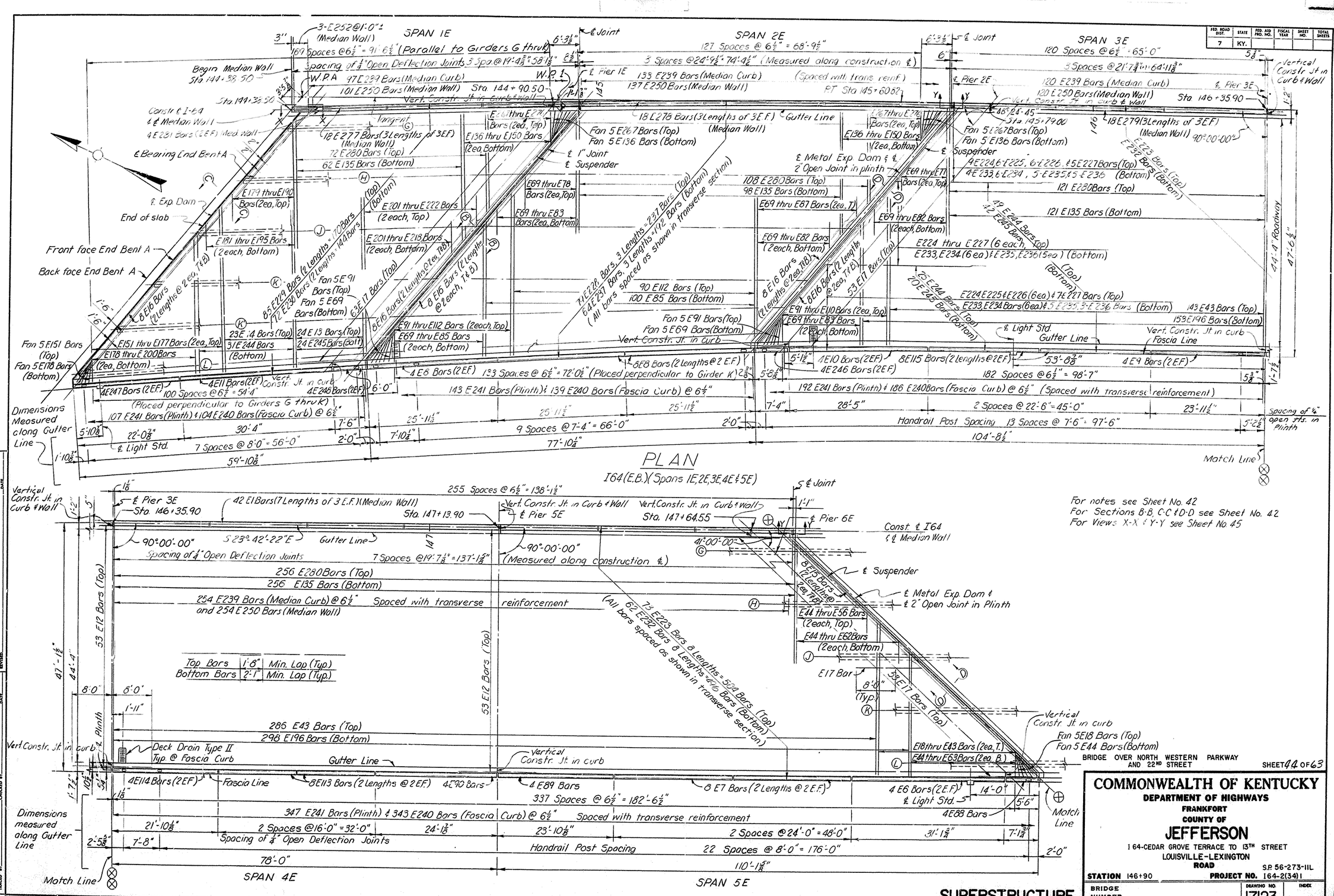

BRIDGE OVER NORTH WESTERN PARKWAY AND 22ND STREET

SHEET 44 OF 63

COMMONWEALTH OF KENTUCKY
DEPARTMENT OF HIGHWAYS
FRANKFORT
COUNTY OF
JEFFERSON

I 64-CEDAR GROVE TERRACE TO 13TH STREET
LOUISVILLE-LEXINGTON ROAD

S.P. 56-273-111L

STATION 146+90 — PROJECT NO. 164-2(34)1

BRIDGE NUMBER — DRAWING NO. 17123 — INDEX

SUPERSTRUCTURE

DESIGNED BY: HAS — CHECKED BY: — DATE: 1-15-66
DETAILED BY: DMH — CHECKED BY: — DATE: 4-22-66
TRACED BY: — CHECKED BY: — DATE:
REVISED: — REVISED: — REVISED:

FED. ROAD DIST.	STATE	FED. AID PROJ. NO.	FISCAL YEAR	SHEET NO.	TOTAL SHEETS
7	KY.				

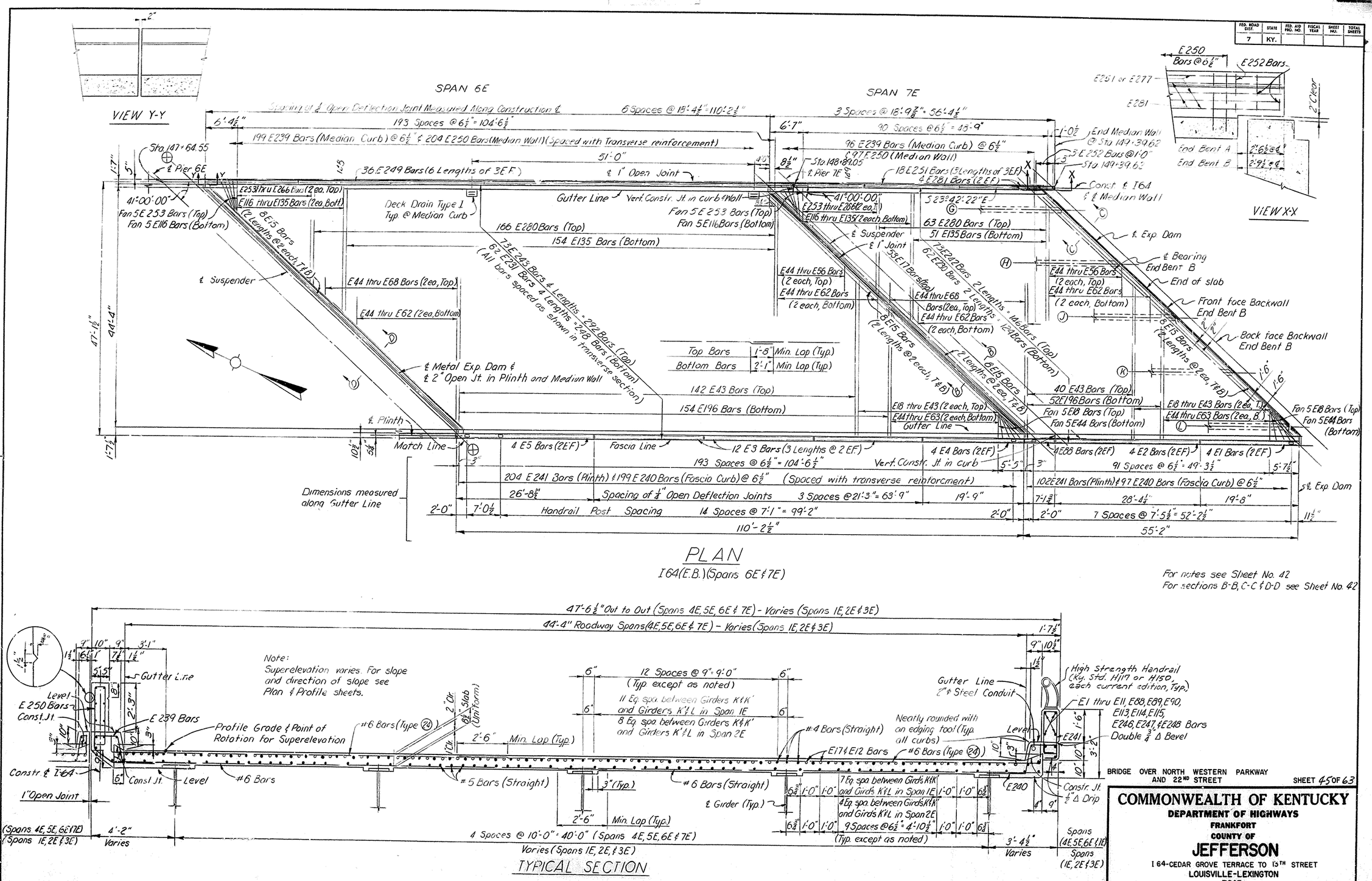

PLAN

I64 (E.B.) (Spans 6E & 7E)

For notes see Sheet No. 42
For sections B-B, C-C & D-D see Sheet No. 42

TYPICAL SECTION

SUPERSTRUCTURE

BRIDGE OVER NORTH WESTERN PARKWAY AND 22ND STREET

SHEET 45 OF 63

COMMONWEALTH OF KENTUCKY
DEPARTMENT OF HIGHWAYS
FRANKFORT
COUNTY OF
JEFFERSON

I 64-CEDAR GROVE TERRACE TO 15TH STREET
LOUISVILLE-LEXINGTON ROAD

STATION 146+90 PROJECT NO. I 64-2(34)1 S.P. 56-273-IIL

BRIDGE NUMBER | DRAWING NO. 17123 | INDEX

DESIGN BY | CHECKED BY | DATE | REVISED
DETAILED BY DMH | CHECKED BY HAS | DATE 4-27-66 | REVISED
TRACED BY | CHECKED BY | DATE | REVISED

FED. ROAD DIST.	STATE	FED. AID PROJ. NO.	FISCAL YEAR	SHEET NO.	TOTAL SHEETS
7	KY.				

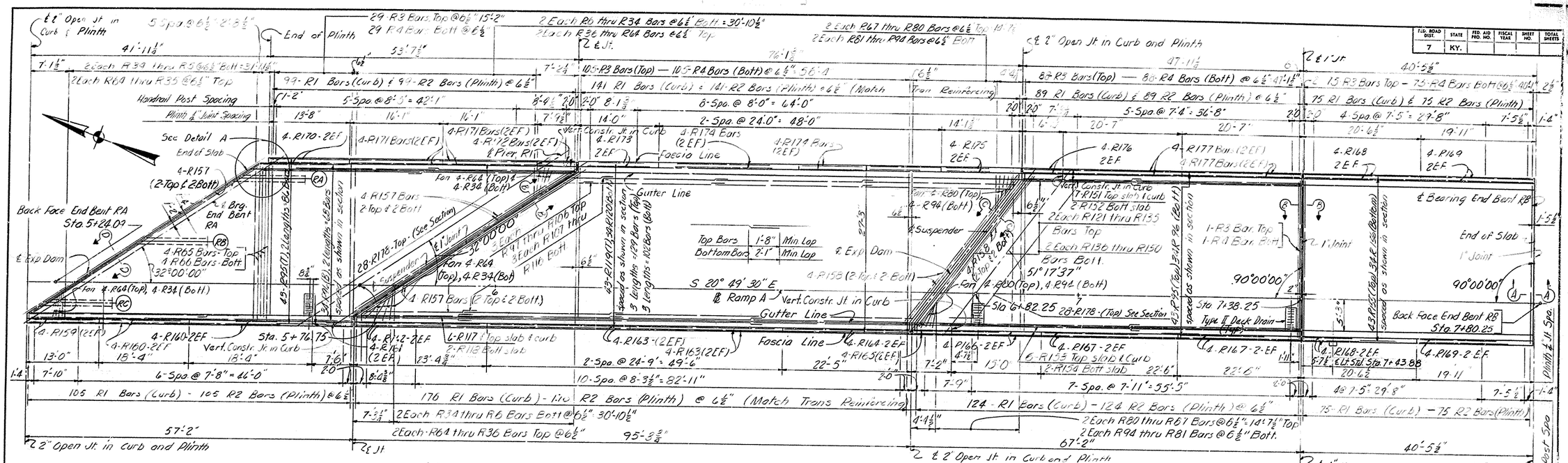

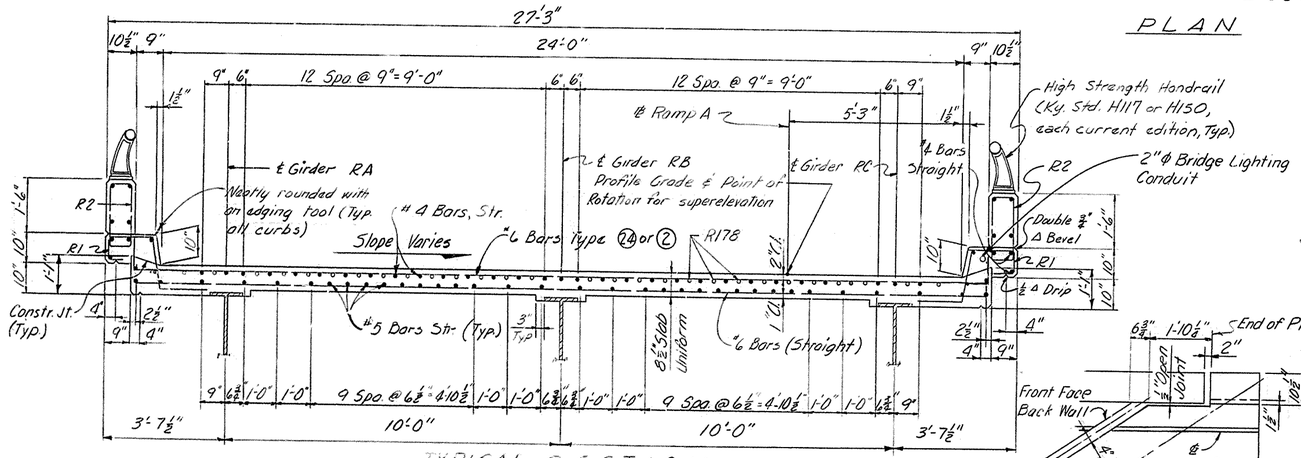

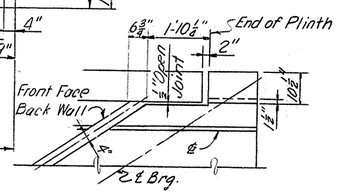

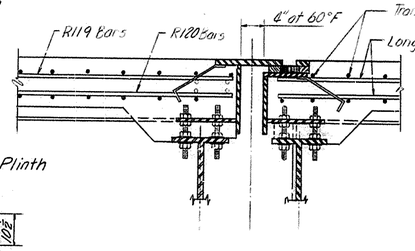

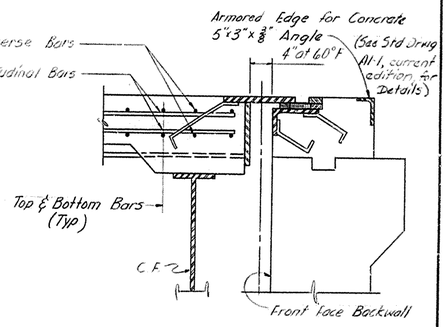

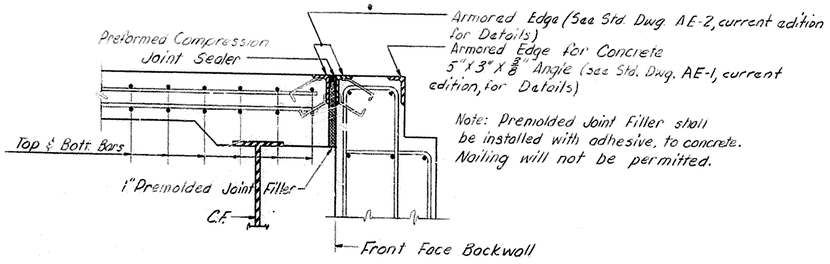

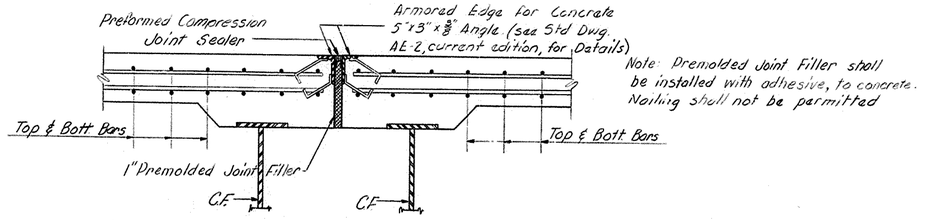

For Notes see Sheet No. 42

BRIDGE OVER NORTH WESTERN PARKWAY AND 22ND STREET

SHEET 46 OF 63

COMMONWEALTH OF KENTUCKY
DEPARTMENT OF HIGHWAYS
FRANKFORT
COUNTY OF
JEFFERSON
164-CEDAR GROVE TERRACE TO 13TH STREET
LOUISVILLE-LEXINGTON
ROAD S.P. 56-273-IIL

STATION 146+90 **PROJECT NO.** 164-2(34)1

BRIDGE NUMBER | DRAWING NO. 17123 | INDEX

SUPERSTRUCTURE

DESIGNED BY N.J.E. CHECKED BY
DETAILED BY L.J.C. CHECKED BY
TRACED BY CHECKED BY
REVISED DATE REVISED DATE REVISED DATE
DATE 3/86

GRETZEN NO. 130-3 AESPROF

FED. ROAD DIST.	STATE	FED. AID PRO. NO.	FISCAL YEAR	SHEET NO.	TOTAL SHEETS
7	KY.				

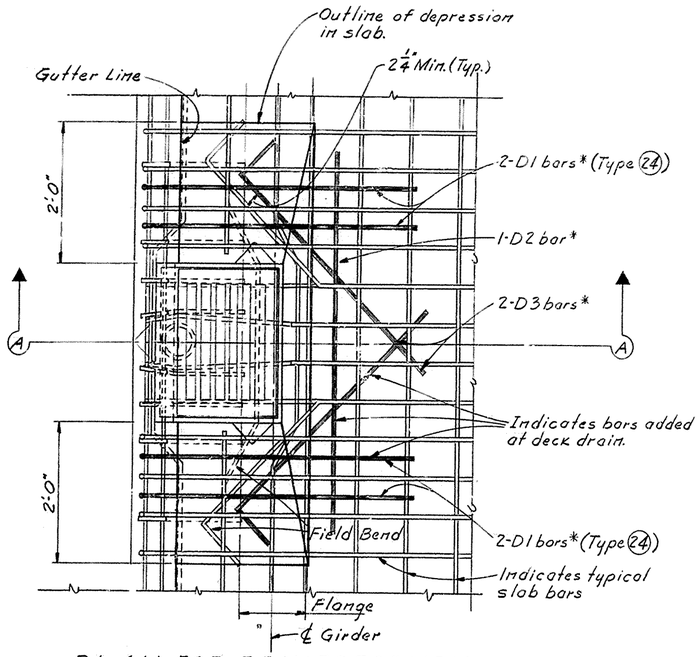

PLAN FOR REINFORCEMENT AT TYPE I DECK DRAIN

Cut or bend Longitudinal Reinforceing as shown or as necessary
Cut or bend Transverse steel as shown.
*Place near top of slab.

⊗ The Junction Box shall be one of the following or an approved equal:

OZ Electric Co. - Type "W"
Spring City Elec Co. - Type "IR"
Hope Elec Products Co. - Type "HG200"

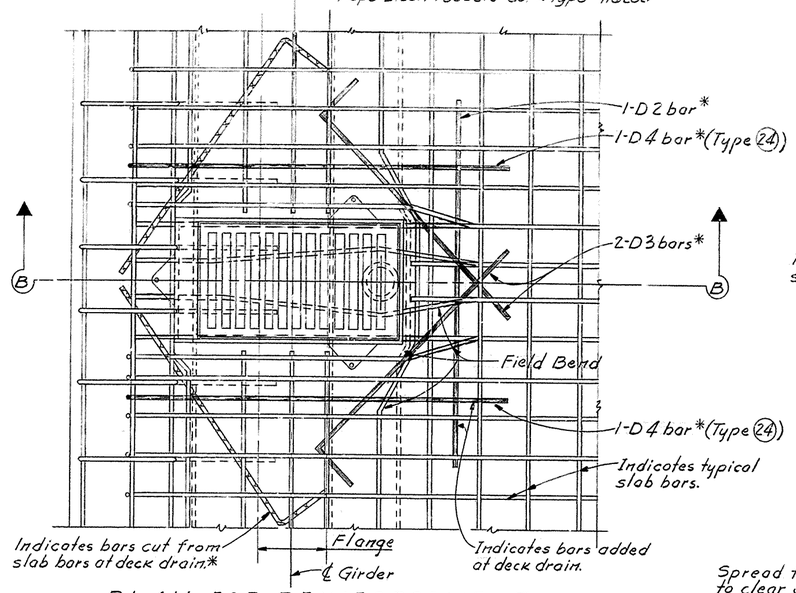

PLAN FOR REINFORCEMENT AT TYPE II DECK DRAIN

Cut or bend Longitudinal Reinforceing as shown or as necessary
Cut or bend Transverse steel as shown.
*Place near top of slab.

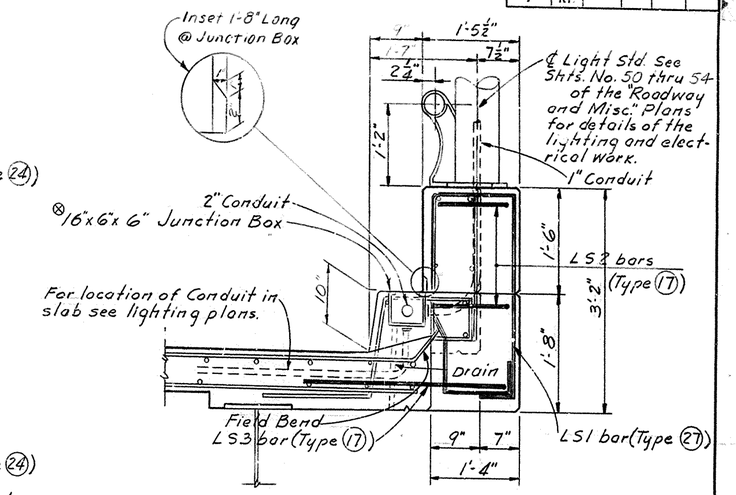

SECTION C C

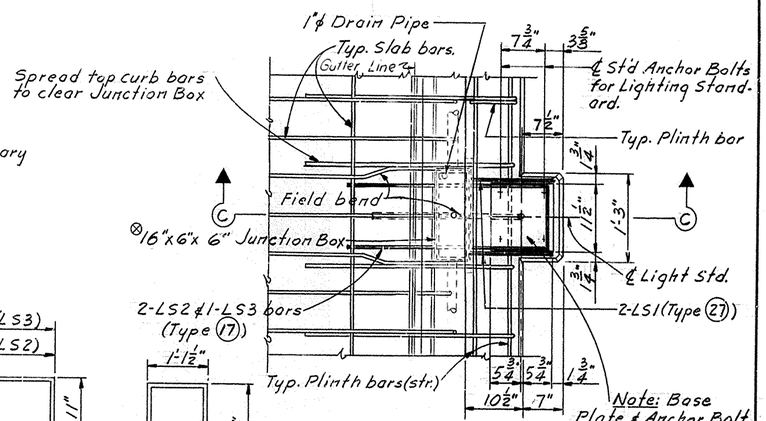

Note: Base Plate & Anchor Bolt dimensions should be checked for specific make of Light Standard.

PLAN OF LIGHT STANDARD

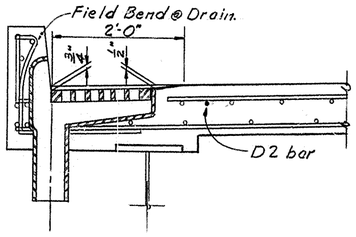

SECTION A A

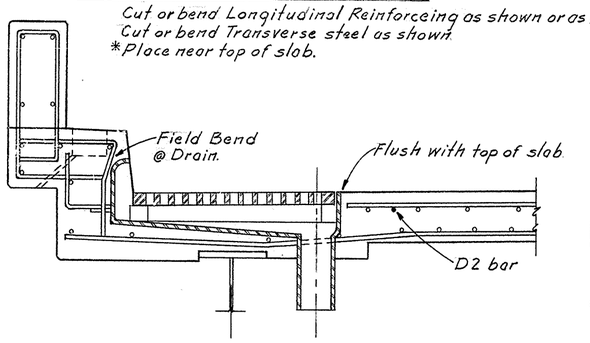

SECTION B B

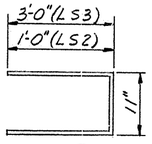

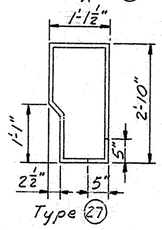

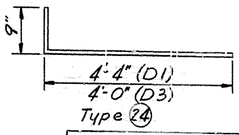

BILL OF REINFORCEMENT					
Mark	Type	Size	No.	Length Ft.	Length In.
D1	24	6	4	5	1
D2	Str.	6	1	5	6
D3	24	6	2	4	9

Note:
"Bill of Reinforcement" indicates the number required for each installation and bars are billed for construction with superstructure.

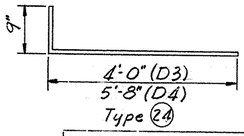

BILL OF REINFORCEMENT					
Mark	Type	Size	No.	Length Ft.	Length In.
D2	Str.	6	1	5	6
D3	24	6	2	4	9
D4	24	6	2	6	5

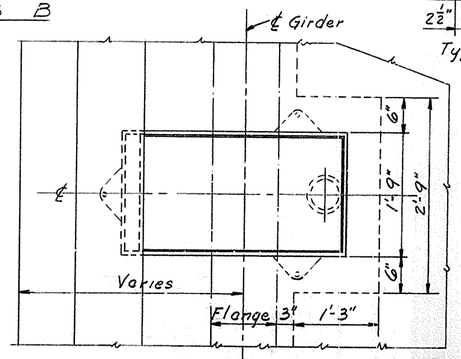

DETAIL OF CONCRETE HAUNCH AT TYPE II DECK DRAIN

BILL OF REINFORCEMENT					
Mark	Type	Size	No.	Length Ft.	Length In.
LS1	27	4	2	8	8
LS2	17	4	2	2	11
LS3	17	4	1	6	11

BRIDGE OVER NORTH WESTERN PARKWAY AND 22ND STREET

SHEET 47 OF 63

COMMONWEALTH OF KENTUCKY
DEPARTMENT OF HIGHWAYS
FRANKFORT
COUNTY OF
JEFFERSON
I64-CEDAR GROVE TERRACE TO 13TH STREET
LOUISVILLE-LEXINGTON ROAD
SP 56-273-IIL
STATION 146+90
PROJECT NO. I64-2(34)I

BRIDGE NUMBER
DRAWING NO. 17123
INDEX

SUPERSTRUCTURE

DESIGNED BY L.M.H. CHECKED BY R. L.N. DATE
DETAILED BY CHECKED BY DATE
TRACED BY CHECKED BY DATE
REVISED DATE
REVISED DATE
REVISED DATE

DIETZGEN No. 196-6 ARCHPROOF

BILL OF REINFORCEMENT — SUPERSTRUCTURE

FED. ROAD DIST.	STATE	FED. AID PROJ. NO.	FISCAL YEAR	SHEET NO.	TOTAL SHEETS
7	KY.				

WESTBOUND

MARK	TYPE	SIZE	LENGTH	NO. OF BARS	LOCATION
W1	Str.	4	20'-3"	4	Plinth
W2		4	27'-3"	4	
W3		4	6'-4"	4	
W4		4	19'-5"	4	
W5		4	20'-11"	12	
W6		4	26'-4"	4	
W7		4	6'-10"	8	
W8		4	20'-8"	16	
W9		4	14'-3"	4	
W10		4	15'-3"	4	
W11		4	16'-9"	4	
W12	Str.	4	13'-2"	4	Plinth
W13	24	6	29'-5"	393	Slab (Transverse)
W14		6	28'-3"	10	
W15		6	27'-4"	10	
W16		6	26'-5"	10	
W17		6	25'-5"	10	
W18		6	24'-6"	10	
W19		6	23'-7"	10	
W20		6	22'-7"	10	
W21		6	21'-8"	10	
W22		6	20'-4"	10	
W23		6	19'-10"	10	
W24		6	18'-10"	10	
W25		6	17'-11"	10	
W26		6	17'-0"	10	
W27		6	16'-1"	10	
W28		6	15'-2"	10	
W29		6	14'-2"	10	
W30		6	13'-3"	10	
W31		6	12'-4"	10	
W32		6	11'-4"	10	
W33		6	10'-5"	10	
W34		6	9'-6"	10	
W35		6	8'-7"	10	
W36		6	7'-7"	10	
W37		6	6'-8"	10	
W38	24	6	5'-9"	35	
W39	Str.	6	26'-9"	10	
W40		6	25'-10"	10	
W41		6	24'-11"	10	
W42		6	23'-11"	10	
W43		6	23'-0"	10	
W44		6	22'-1"	10	
W45		6	21'-2"	10	
W46		6	20'-2"	10	
W47		6	19'-3"	10	
W48		6	18'-4"	10	
W49		6	17'-4"	10	
W50		6	16'-5"	10	
W51		6	15'-6"	10	
W52		6	14'-7"	10	
W53		6	13'-7"	10	
W54		6	12'-8"	10	
W55		6	11'-9"	10	
W56		6	10'-10"	10	
W57		6	9'-10"	10	
W58		6	8'-11"	10	
W59		6	8'-0"	10	
W60	Str.	6	7'-1"	10	Slab (Transverse)

WESTBOUND

MARK	TYPE	SIZE	LENGTH	NO. OF BARS	LOCATION
W61	Str.	6	6'-2"	10	Slab (Transverse)
W62		6	5'-2"	10	
W63		6	4'-3"	10	
W64		6	23'-9"	8	
W65		6	22'-10"	6	
W66		6	21'-10"	6	
W67		6	20'-11"	6	
W68		6	20'-0"	6	
W69		6	19'-1"	6	
W70		6	18'-1"	6	
W71		6	17'-2"	6	
W72		6	16'-3"	6	
W73		6	15'-4"	6	
W74		6	14'-5"	6	
W75		6	13'-5"	6	
W76		6	12'-6"	6	
W77		6	11'-7"	6	
W78		6	10'-7"	6	
W79		6	9'-8"	6	
W80		6	8'-9"	6	
W81		6	7'-10"	6	
W82		6	6'-10"	6	
W83		6	5'-11"	6	
W84		6	5'-0"	21	
W85		6	21'-9"	4	
W86		6	20'-10"	4	
W87		6	19'-11"	4	
W88		6	18'-11"	4	
W89		6	18'-0"	4	
W90		6	17'-1"	4	
W91		6	16'-2"	4	
W92		6	15'-2"	4	
W93		6	14'-3"	4	
W94		6	13'-4"	4	
W95		6	12'-4"	4	
W96		6	11'-5"	4	
W97		6	10'-6"	4	
W98		6	9'-7"	4	
W99		6	8'-7"	4	
W100		6	7'-8"	4	
W101		6	6'-9"	4	
W102		6	5'-10"	4	
W103		6	4'-10"	4	
W104		6	33'-9"	352	
W105		6	32'-10"	4	
W106		6	31'-11"	4	
W107		6	31'-0"	4	
W108		6	30'-1"	4	
W109		6	29'-3"	4	
W110		6	28'-4"	4	
W111		6	27'-6"	4	
W112		6	26'-7"	4	
W113		6	25'-8"	4	
W114		6	24'-8"	4	
W115		6	23'-9"	4	
W116		6	22'-10"	4	
W117		6	21'-10"	4	
W118		6	20'-11"	4	
W119		6	20'-0"	4	
W120	Str.	6	19'-1"	4	Slab (Transverse)

WESTBOUND

MARK	TYPE	SIZE	LENGTH	NO. OF BARS	LOCATION
W121	Str.	6	18'-1"	4	Slab (Transverse)
W122		6	17'-2"	4	
W123		6	16'-3"	4	
W124		6	15'-4"	4	
W125		6	14'-5"	4	
W126		6	13'-5"	4	
W127		6	12'-6"	4	
W128		6	11'-7"	4	
W129		6	10'-7"	4	
W130		6	9'-8"	4	
W131		6	8'-9"	4	
W132		6	7'-10"	4	
W133		6	6'-10"	4	
W134		6	5'-11"	4	
W135		6	5'-0"	14	
W136		6	31'-9"	6	
W137		6	30'-10"	6	
W138		6	29'-11"	6	
W139		6	28'-11"	6	
W140		6	28'-0"	6	
W141		6	27'-1"	6	
W142		6	26'-2"	6	
W143		6	25'-2"	6	
W144		6	24'-3"	6	
W145		6	23'-4"	6	
W146		6	22'-4"	6	
W147		6	21'-5"	6	
W148		6	20'-6"	6	
W149		6	19'-7"	6	
W150		6	18'-7"	6	
W151		6	17'-8"	6	
W152		6	16'-9"	6	
W153		6	15'-10"	6	
W154		6	14'-10"	6	
W155		6	13'-11"	6	
W156		6	13'-0"	6	
W157		6	12'-1"	6	
W158		6	11'-2"	6	
W159		6	10'-2"	6	
W160		6	9'-3"	6	
W161		6	8'-4"	6	
W162		6	7'-5"	6	
W163		6	6'-5"	6	
W164		6	5'-6"	6	
W165		6	4'-7"	6	
W166	Str.	6	3'-9"	6	
W167	24	6	8'-5"	7	
W168		6	9'-7"	2	
W169		6	10'-10"	2	
W170		6	12'-1"	2	
W171		6	13'-3"	2	
W172		6	14'-6"	2	
W173		6	15'-9"	2	
W174		6	16'-11"	2	
W175		6	18'-2"	2	
W176		6	19'-5"	2	
W177		6	20'-7"	2	
W178		6	21'-10"	2	
W179		6	23'-1"	2	
W180	24	6	24'-3"	2	Slab (Transverse)

WESTBOUND

MARK	TYPE	SIZE	LENGTH	NO. OF BARS	LOCATION
W181	24	6	25'-6"	2	Slab (Transverse)
W182		6	26'-9"	2	
W183		6	27'-11"	2	
W184	24	6	29'-2"	2	
W185	Str.	6	4'-10"	4	
W186		6	6'-1"	4	
W187		6	7'-3"	4	
W188		6	8'-6"	4	
W189		6	9'-8"	4	
W190		6	10'-11"	4	
W191		6	12'-2"	4	
W192		6	13'-5"	4	
W193		6	14'-7"	4	
W194		6	15'-10"	4	
W195		6	17'-0"	4	
W196		6	18'-3"	4	
W197		6	19'-6"	4	
W198		6	20'-8"	4	
W199		6	21'-11"	4	
W200		6	23'-2"	4	
W201		6	24'-4"	4	
W202		6	25'-7"	4	
W203		6	26'-10"	4	
W204		6	28'-0"	4	
W205		6	29'-3"	2	
W206		6	30'-6"	2	
W207		6	31'-9"	2	
W208		6	32'-11"	2	
W209		6	7'-8"	7	
W210		6	8'-10"	2	
W211		6	10'-1"	2	
W212		6	11'-4"	2	
W213		6	12'-6"	2	
W214		6	13'-9"	2	
W215		6	15'-0"	2	
W216		6	16'-2"	2	
W217		6	17'-5"	2	
W218		6	18'-8"	2	
W219		6	19'-10"	2	
W220		6	21'-1"	2	
W221		6	22'-4"	2	
W222	Str.	6	23'-6"	2	
W223	24	6	6'-0"	7	
W224		6	7'-2"	2	
W225		6	8'-3"	2	
W226		6	9'-5"	2	
W227		6	10'-6"	2	
W228		6	11'-8"	2	
W229		6	12'-9"	2	
W230		6	13'-11"	2	
W231		6	15'-0"	2	
W232		6	16'-2"	2	
W233		6	17'-3"	2	
W234		6	18'-5"	2	
W235		6	19'-6"	2	
W236		6	20'-8"	2	
W237	24	6	21'-9"	2	Slab (Transverse)

WESTBOUND

MARK	TYPE	SIZE	LENGTH	NO. OF BARS	LOCATION
W238	24	6	22'-11"	2	Slab (Transverse)
W239		6	24'-0"	2	
W240		6	25'-2"	2	
W241		6	26'-3"	2	
W242		6	27'-5"	2	
W243	24	6	28'-6"	2	
W244	Str.	6	5'-3"	11	
W245		6	6'-5"	6	
W246		6	7'-6"	6	
W247		6	8'-8"	6	
W248		6	9'-9"	6	
W249		6	10'-11"	6	
W250		6	12'-0"	6	
W251		6	13'-2"	6	
W252		6	14'-3"	6	
W253		6	15'-5"	6	
W254		6	16'-6"	6	
W255		6	17'-8"	6	
W256		6	18'-9"	6	
W257		6	19'-11"	6	
W258		6	21'-0"	6	
W259		6	22'-2"	6	
W260		6	23'-3"	4	
W261		6	24'-5"	4	
W262		6	25'-6"	4	
W263		6	26'-8"	4	
W264		6	27'-9"	4	
W265		6	28'-11"	2	
W266		6	30'-0"	2	
W267		6	31'-2"	2	
W268		6	32'-3"	2	
W269		6	33'-5"	2	
W270		6	7'-3"	7	
W271		6	8'-4"	2	
W272		6	9'-6"	2	
W273		6	10'-7"	2	
W274		6	11'-8"	2	
W275		6	12'-10"	2	
W276		6	13'-11"	2	
W277		6	15'-0"	2	
W278		6	16'-2"	2	
W279		6	17'-3"	2	
W280		6	18'-4"	2	
W281		6	19'-5"	2	
W282		6	20'-7"	2	
W283		6	21'-8"	2	
W284	Str.	6	22'-9"	2	Slab (Transverse)

DESIGNED BY ____ CHECKED BY ____ DATE ____ REVISED ____
DETAILED BY L.M.H. CHECKED BY CSB DATE 8-66 REVISED ____
TRACED BY ____ CHECKED BY ____ DATE ____ REVISED ____

BRIDGE OVER NORTH WESTERN PARKWAY AND 22ND STREET

SHEET 48 OF 63

COMMONWEALTH OF KENTUCKY
DEPARTMENT OF HIGHWAYS
FRANKFORT
COUNTY OF
JEFFERSON
I 64-CEDAR GROVE TERRACE TO 13TH STREET
LOUISVILLE-LEXINGTON ROAD
S.P. 56-273-IIL

STATION 146+90 PROJECT NO. 164-2(34)1

BRIDGE NUMBER | DRAWING NO. 17123 | INDEX

SUPERSTRUCTURE

BILL OF REINFORCEMENT — SUPERSTRUCTURE

FED. ROAD DIST.	STATE	FED. AID PROJ. NO.	FISCAL YEAR	SHEET NO.	TOTAL SHEETS
7	KY.				

WESTBOUND

MARK	TYPE	SIZE	LENGTH	NO. OF BARS	LOCATION
W285	Str	6	23'-11"	2	Slab (Transverse)
W286	Str	6	25'-0"	56	
W287	24	6	6'-0"	7	
W288		6	7'-1"	2	
W289		6	10'-3"	2	
W290		6	11'-4"	2	
W291		6	12'-5"	2	
W292		6	13'-7"	2	
W293		6	14'-8"	2	
W294		6	15'-9"	2	
W295		6	16'-11"	2	
W296		6	18'-0"	2	
W297		6	19'-1"	2	
W298		6	20'-2"	2	
W299		6	21'-4"	2	
W300		6	22'-5"	2	
W301		6	23'-6"	2	
W302		6	24'-8"	2	
W303		6	25'-9"	2	
W304		6	26'-10"	2	
W305		6	27'-11"	2	
W306		6	29'-1"	2	
W307		6	30'-2"	2	
W308	24	6	30'-3"	50	
W309	Str	6	5'-0"	4	
W310		6	6'-2"	4	
W311		6	7'-3"	4	
W312		6	8'-5"	4	
W313		6	9'-7"	4	
W314		6	10'-9"	4	
W315		6	11'-10"	4	
W316		6	13'-0"	4	
W317		6	14'-2"	4	
W318		6	15'-4"	4	
W319		6	16'-5"	4	
W320		6	17'-7"	4	
W321		6	18'-9"	4	
W322		6	19'-11"	4	
W323		6	21'-0"	4	
W324		6	22'-2"	4	
W325		6	23'-4"	4	
W326		6	24'-6"	4	
W327		6	25'-7"	4	
W328		6	26'-9"	4	
W329		6	27'-11"	4	
W330		6	29'-1"	2	
W331		6	30'-2"	2	
W332		6	31'-4"	2	
W333		6	32'-6"	2	
W334	Str.	6	33'-3"	2	
W335	24	6	6'-1"	7	
W336		6	7'-3"	2	
W337		6	8'-5"	2	
W338		6	9'-7"	2	
W339		6	10'-9"	2	
W340		6	11'-11"	2	
W341		6	13'-1"	2	
W342		6	14'-4"	2	
W343		6	15'-6"	2	
W344	24	6	16'-8"	2	Slab (Transverse)

WESTBOUND

MARK	TYPE	SIZE	LENGTH	NO. OF BARS	LOCATION
W345	24	6	17'-10"	2	Slab (Transverse)
W346		6	19'-0"	2	
W347		6	20'-2"	2	
W348		6	21'-4"	2	
W349		6	22'-6"	2	
W350		6	23'-8"	2	
W351		6	24'-10"	2	
W352		6	26'-0"	2	
W353		6	27'-2"	2	
W354		6	28'-4"	2	
W355		6	29'-6"	2	
W356		6	30'-9"	2	
W357	24	6	31'-11"	38	
W358	Str	6	35'-0"	50	
W359		6	5'-4"	7	
W360		6	6'-6"	2	
W361		6	7'-8"	2	
W362		6	8'-10"	2	
W363		6	10'-0"	2	
W364		6	11'-2"	2	
W365		6	12'-4"	2	
W366		6	13'-7"	2	
W367		6	14'-9"	2	
W368		6	15'-11"	2	
W369		6	17'-1"	2	
W370		6	18'-3"	2	
W371		6	19'-5"	2	
W372		6	20'-7"	2	
W373		6	21'-9"	2	
W374		6	22'-11"	2	
W375		6	24'-1"	2	
W376		6	25'-3"	2	
W377		6	26'-5"	2	
W378		6	27'-7"	2	
W379		6	28'-9"	2	
W380		6	30'-0"	2	
W381		6	31'-2"	2	
W382		6	32'-4"	2	
W383		6	33'-6"	2	
W384		6	34'-8"	2	
W385		6	35'-10"	2	
W386		6	36'-8"	38	
W387		6	5'-0"	4	
W388		6	6'-2"	4	
W389		6	7'-5"	4	
W390		6	8'-7"	4	
W391		6	9'-10"	4	
W392		6	11'-0"	4	
W393		6	12'-2"	4	
W394		6	13'-5"	4	
W395		6	14'-7"	4	
W396		6	15'-10"	4	
W397		6	17'-0"	4	
W398		6	18'-2"	4	
W399		6	19'-5"	4	
W400		6	20'-7"	4	
W401		6	21'-10"	4	
W402		6	23'-0"	4	
W403		6	24'-2"	4	
W404	Str.	6	25'-5"	2	Slab (Transverse)

WESTBOUND

MARK	TYPE	SIZE	LENGTH	NO. OF BARS	LOCATION
W405	Str	6	26'-7"	2	Slab (Transverse)
W406		6	27'-10"	2	
W407		6	29'-0"	2	
W408		6	5'-9"	7	
W409		6	6'-11"	2	
W410		6	8'-0"	2	
W411		6	9'-2"	2	
W412		6	10'-4"	2	
W413		6	11'-5"	2	
W414		6	12'-7"	2	
W415		6	13'-9"	2	
W416		6	14'-10"	2	
W417		6	16'-0"	2	
W418		6	17'-2"	2	
W419		6	18'-3"	2	
W420		6	19'-5"	2	
W421		6	20'-7"	2	
W422		6	21'-8"	2	
W423		6	22'-10"	2	
W424	Str	6	24'-11"	70	
W425	24	6	7'-6"	7	
W426		6	8'-8"	2	
W427		6	9'-9"	2	
W428		6	10'-11"	2	
W429		6	12'-1"	2	
W430		6	13'-2"	2	
W431		6	14'-4"	2	
W432		6	15'-6"	2	
W433		6	16'-7"	2	
W434		6	17'-9"	2	
W435		6	18'-11"	2	
W436		6	20'-0"	2	
W437		6	21'-2"	2	
W438		6	22'-4"	2	
W439		6	23'-5"	2	
W440		6	24'-7"	2	
W441		6	25'-8"	2	
W442		6	26'-10"	2	
W443		6	28'-0"	2	
W444		6	29'-1"	2	
W445		6	30'-3"	2	
W446	24	6	31'-5"	60	
W447	Str.	6	5'-0"	4	
W448		6	6'-1"	4	
W449		6	7'-2"	4	
W450		6	8'-3"	4	
W451		6	9'-4"	4	
W452		6	10'-5"	4	
W453		6	11'-6"	4	
W454		6	12'-7"	4	
W455		6	13'-7"	4	
W456		6	14'-8"	4	
W457		6	15'-9"	4	
W458		6	16'-10"	4	
W459		6	17'-11"	4	
W460		6	19'-0"	4	
W461		6	20'-1"	4	
W462		6	21'-2"	4	
W463		6	22'-3"	4	
W464	Str.	6	23'-4"	4	Slab (Transverse)

WESTBOUND

MARK	TYPE	SIZE	LENGTH	NO. OF BARS	LOCATION
W465	Str	6	24'-5"	4	Slab (Transverse)
W466		6	25'-6"	4	
W467		6	26'-7"	4	
W468		6	27'-8"	4	
W469		6	28'-9"	4	
W470		6	29'-0"	4	
W471		6	30'-10"	4	
W472		6	31'-11"	4	
W473		6	33'-0"	2	
W474		6	34'-1"	2	
W475		6	35'-2"	2	
W476		6	36'-3"	2	
W477		6	37'-4"	2	Slab (Transverse)
W478		6	28'-10"	72	along Exp. Dam & Jt.
W479		6	25'-10"	24	along Exp. Dam & Jt.
W480		6	26'-6	24	along Ex. Dam & Jt.
W481		4	28'-5"	168	Slab (Longitudinal)
W482		4	28'-9"	524	
W483		4	31'-0"	252	
W484		4	14'-0"	272	
W485		4	16'-0"	66	
W486		4	37'-8"	107	
W487		4	25'-2"	289	
W488		4	12'-7"	23	
W489		5	28'-8"	154	
W490		5	29'-0"	482	
W491		5	31'-5"	231	
W492		5	37'-11	99	
W493		5	25'-5"	269	
W494	Str.	5	12'-10"	23	Slab (Longitudinal)
W495	23	4	5'-9"	708	Plinth
W496	22	5	5'-1"	693	Fascia Curb
W497	28	4	2'-8"	898	Median Curb
W498	Str	4	20'-10"	4	Plinth
W499	Str.	4	24'-2"	4	Plinth
W500	Str.	4	6'-8"	4	Plinth
W501	24	6	30'-6"	492	Slab (Transverse)
W502	Str.	6	24'-6"	524	Slab (Transverse)
W503	24	6	31'-3"	46	Slab (Transverse)

EASTBOUND

MARK	TYPE	SIZE	LENGTH	NO. OF BARS	LOCATION
E1	Str.	4	19'-4"	46	Plinth & Med. Wall
E2		4	28'-1"	4	
E3		4	20'-11"	12	
E4		4	19'-5"	4	
E5		4	26'-4"	4	
E6		4	30'-10"	4	
E7		4	23'-8"	8	
E8		4	25'-7"	12	
E9		4	23'-8"	4	
E10		4	28'-2"	4	
E11		4	30'-1"	4	Plinth
E12	Str.	4	16'-0"	106	Slab (Longitudinal)
E13	24	6	33'-3"	24	Slab (Transverse)
E14	24	6	33'-9"	23	Slab (Transverse)
E15	Str.	6	34'-3"	40	along Exp. Dam & Jt.
E16	Str.	6	35'-0"	40	along Exp. Dam & Jt.

EASTBOUND

MARK	TYPE	SIZE	LENGTH	NO. OF BARS	LOCATION
E17	Str	4	14'-0"	222	Slab (Longitudinal)
E18	24	6	6'-0"	21	Slab (Transverse)
E19		6	6'-11"	6	
E20		6	7'-11"		
E21		6	8'-9"		
E22		6	9'-9"		
E23		6	10'-8"		
E24		6	11'-7"		
E25		6	12'-7"		
E26		6	13'-6"		
E27		6	14'-5"		
E28		6	15'-4"		
E29		6	16'-4"		
E30		6	17'-3"		
E31		6	18'-2"	6	
E32		6	19'-1"	6	
E33		6	20'-1"	6	
E34		6	21'-0"	6	
E35		6	21'-11"	6	
E36		6	22'-10"	6	
E37		6	23'-9"	6	
E38		6	24'-9"	6	
E39		6	25'-8"	6	
E40		6	26'-8"	6	
E41		6	27'-7"	6	
E42		6	28'-6"	6	
E43	24	6	29'-8"	617	
E44	Str	6	5'-3"	41	
E45		6	6'-2"	26	
E46		6	7'-2"	26	
E47		6	8'-1"	26	
E48		6	9'-0"	26	
E49		6	9'-11"	26	
E50		6	10'-10"	26	
E51		6	11'-10"	26	
E52		6	12'-9"	26	
E53		6	13'-8"	26	
E54		6	14'-7"	26	
E55		6	15'-6"	26	
E56		6	16'-5"	26	
E57		6	17'-5"	20	
E58		6	18'-4"	20	
E59		6	19'-3"	20	
E60		6	20'-2"	20	
E61		6	21'-1"	20	
E62		6	22'-1"	20	
E63	Str	6	23'-0"	10	Slab (Transverse)

DESIGNED BY NLE CHECKED BY DATE
DETAILED BY DMH CHECKED BY DATE
TRACED BY CHECKED BY DATE
REVISED REVISED REVISED

BRIDGE OVER NORTH WESTERN PARKWAY AND 22ND STREET

SHEET 49 OF 63

COMMONWEALTH OF KENTUCKY
DEPARTMENT OF HIGHWAYS
FRANKFORT
COUNTY OF
JEFFERSON
I 64-CEDAR GROVE TERRACE TO 13TH STREET
LOUISVILLE-LEXINGTON ROAD
S.P. 56-273-111L

STATION 146+90 PROJECT NO. I 64-2(34)1

BRIDGE NUMBER | DRAWING NO. 17123 | INDEX

SUPERSTRUCTURE

BILL OF REINFORCEMENT — SUPERSTRUCTURE

FED. ROAD DIST.	STATE	FED. AID PRO. NO.	FISCAL YEAR	SHEET NO.	TOTAL SHEETS
7	KY.				

EASTBOUND

MARK	TYPE	SIZE	LENGTH	NO. OF BARS	LOCATION
E 64	Str.	6	24'-3"	4	Slab(Transverse)
E 65	↑	6	25'-2"	4	↑
E 66		6	26'-1"	4	
E 67		6	27'-1"	4	
E 68		6	28'-0"	4	
E 69		6	6'-0"	26	
E 70		6	7'-3"	16	
E 71		6	8'-6"	16	
E 72		6	9'-9"	16	
E 73		6	10'-11"	16	
E 74		6	12'-2"	16	
E 75		6	13'-4"	16	
E 76		6	14'-7"	16	
E 77		6	15'-10"	16	
E 78		6	17'-0"	14	
E 79		6	18'-3"	12	
E 80		6	19'-6"	12	
E 81		6	20'-8"	12	
E 82		6	21'-11"	12	
E 83		6	23'-2"	8	
E 84		6	24'-4"	4	
E 85		6	25'-7"	104	
E 86		6	26'-10"	2	↓
E 87		6	28'-0"	2	Slab(Transverse)
E 88	↓	4	6'-10"	8	Plinth
E 89		4	23'-7"	4	Plinth
E 90	Str.	4	23'-11"	4	Plinth
E 91	24	6	6'-9"	14	Slab(Transverse)
E 92	↑	6	7'-11"	4	↑
E 93		6	9'-0"	↕	
E 94		6	10'-1"		
E 95		6	11'-3"		
E 96		6	12'-5"		
E 97		6	13'-6"		
E 98		6	14'-8"		
E 99		6	15'-9"		
E 100		6	16'-11"	↓	
E 101		6	18'-1"	4	
E 102		6	19'-2"	4	
E 103		6	20'-3"	4	
E 104		6	21'-5"	4	
E 105		6	22'-7"	4	
E 106		6	23'-8"	4	
E 107		6	24'-9"	4	
E 108		6	25'-11"	4	
E 109		6	27'-0"	4	
E 110		6	28'-2"	4	
E 111	↓	6	29'-4"	2	↓
E 112	24	6	30'-5"	92	Slab(Transverse)
E 113	Str.	4	15'-9"	8	Plinth
E 114	Str.	4	21'-7"	4	Plinth
E 115	Str.	4	22'-3"	8	Plinth
E 116	↑	6	6'-0"	14	Slab(Transverse)
E 117		6	6'-11"	4	↑
E 118		6	7'-11"	4	
E 119		6	8'-10"	4	
E 120		6	9'-10"	4	
E 121		6	10'-9"	4	
E 122	↓	6	11'-9"	4	↓
E 123	Str.	6	12'-9"	4	Slab(Transverse)

EASTBOUND

MARK	TYPE	SIZE	LENGTH	NO. OF BARS	LOCATION
E 124	Str	6	13'-5"	4	Slab(Transverse)
E 125	↑	6	14'-5"	4	↑
E 126		6	15'-7"	4	
E 127		6	16'-7"	4	
E 128		6	17'-6"	4	
E 129		6	18'-6"	4	
E 130		6	19'-5"	4	
E 131		6	20'-5"	4	
E 132		6	21'-4"	4	
E 133		6	22'-4	4	
E 134		6	23'-3"	4	
E 135		6	24'-3"	746	
E 136		6	7'-0	14	
E 137		6	8'-3"	4	
E 138		6	9'-6"	4	
E 139		6	10'-9"	4	
E 140		6	11'-11	4	
E 141		6	13'-2"	4	
E 142		6	14'-5"	4	
E 143		6	15'-7"	4	
E 144		6	16'-10	4	
E 145		6	18'-0"	4	
E 146		6	19'-3"	4	
E 147		6	20'-6"	4	
E 148		6	21'-5"	4	
E 149	↓	6	22'-11"	4	
E 150	Str	6	24'-2"	4	
E 151	24	6	6'-3"	7	
E 152	↑	6	7'-3"	2	
E 153		6	8'-3"	2	
E 154		6	9'-4"	2	
E 155		6	10'-4"	2	
E 156		6	11'-4"	2	
E 157		6	12'-4"	2	
E 158		6	13'-5"	2	
E 159		6	14'-5"	2	
E 160		6	15'-5"	2	
E 161		6	16'-5"	2	
E 162		6	17'-6"	2	
E 163		6	18'-6"	2	
E 164		6	19'-6"	2	
E 165		6	20'-6"	2	
E 166		6	21'-6"	2	
E 167		6	22'-7"	2	
E 168		6	23'-7"	2	
E 169		6	24'-7"	2	
E 170		6	25'-7"	2	
E 171		6	26'-8"	2	
E 172		6	27'-8"	2	
E 173		6	28'-8"	2	
E 174		6	29'-8"	2	
E 175		6	30'-9"	2	
E 176	↓	6	31'-9"	2	
E 177	24	6	32'-9"	2	
E 178	Str.	6	5'-6"	7	
E 179	↑	6	6'-6"	4	
E 180		6	7'-6"	4	
E 181		6	8'-7"	6	
E 182	↓	6	9'-7"	6	↓
E 183	Str.	6	10'-7"	6	Slab(Transverse)

EASTBOUND

MARK	TYPE	SIZE	LENGTH	NO. OF BARS	LOCATION
E 184	Str.	6	11'-7"	6	Slab(Transverse)
E 185	↑	6	12'-8"	6	↑
E 186		6	13'-8"	6	
E 187		6	14'-8"	6	
E 188		6	15'-9"	6	
E 189		6	16'-9"	6	
E 190		6	17'-9"	6	
E 191		6	18'-9"	4	
E 192		6	19'-9"	4	
E 193		6	20'-9"	4	
E 194		6	21'-10"	4	
E 195		6	22'-10"	4	
E 196		6	23'-10"	659	
E 197		6	24'-10"	2	
E 198		6	25'-11"	2	
E 199		6	26'-11"	2	
E 200		6	27'-11"	2	
E 201		6	6'-0"	4	
E 202		6	7'-2"	4	
E 203		6	8'-3"	4	
E 204		6	9'-5"	4	
E 205		6	10'-7"	4	
E 206		6	11'-9"	4	
E 207		6	12'-10"	4	
E 208		6	14'-0"	4	
E 209		6	15'-2"	4	
E 210		6	16'-3"	4	
E 211		6	17'-5"	4	
E 212		6	18'-7"	4	
E 213		6	19'-9"	4	
E 214		6	20'-10"	4	
E 215		6	22'-0"	4	
E 216		6	23'-2"	4	
E 217		6	24'-3"	4	
E 218		6	25'-5"	4	
E 219		6	26'-7"	2	
E 220		6	27'-9"	2	
E 221		6	28'-10"	2	↓
E 222		6	30'-0"	2	Slab(Transverse)
E 223		4	26'-10"	584	Slab(Longitudinal)
E 224		4	7'-10"	21	↑
E 225		4	15'-8"	18	
E 226		4	23'-6"	18	
E 227		4	31'-4"	18	
E 228		4	27'-0"	237	
E 229		4	30'-8"	170	
E 230		5	28'-6"	124	
E 231		5	29'-1"	248	
E 232		5	27'-6"	496	
E 233		5	7'-11"	16	
E 234		5	15'-10"	18	
E 235		5	23'-9"	15	
E 236		5	31'-8"	13	
E 237	↓	5	27'-4"	192	↓
E 238	Str.	5	30'-10"	144	Slab(Longitudinal)
E 239	30	5	7'-4"	899	Median Curb.
E 240	22	5	5'-1"	1068	Fascia Curb.
E 241	23	4	5'-9"	1095	Plinth
E 242	Str.	4	28'-3"	146	Slab(Longitudinal)
E 243	Str.	4	28'-9"	292	Slab(Longitudinal)

RAMP A

MARK	TYPE	SIZE	LENGTH	NO. OF BARS	LOCATION
E 244	Str	4	31'-1"	105	Slab(Longitudinal)
E 245	↑	5	31'-6"	86	Slab(Longitudinal)
E 246		4	7'-0"	4	Plinth
E 247	↓	4	21'-10"	4	Plinth
E 248	Str.	4	7'-2"	4	Plinth
E 249	Str	4	18'-2"	36	Median Wall
E 250	23	4	7'-8"	913	Median Wall
E 251	Str	4	18'-6"	18	Median Wall
E 252	23	4	5'-8"	6	Median Wall
Note: For additional Eastbound Bars see Sht. 51					
R 1	22	5	5'-1"	884	Curb
R 2	23	4	5'-9"	884	Plinth
R 3	2	6	27'-2"	302	Slab(Transverse)
R 4	Str.	6	25'-6"	302	↑
R 5	↑	6	24'-6"	2	
R 6		6	23'-10"	6	
R 7		6	23'-2"	6	
R 8		6	22'-6"	6	
R 9		6	21'-10"	6	
R 10		6	21'-2"	6	
R 11		6	20'-6"	6	
R 12		6	19'-10"	6	
R 13		6	19'-2"	6	
R 14		6	18'-6"	6	
R 15		6	17'-10"	6	
R 16		6	17'-2"	6	
R 17		6	16'-6"	6	
R 18		6	15'-10"	6	
R 19		6	15'-2"	6	
R 20		6	14'-6"	6	
R 21		6	13'-10"	6	
R 22		6	13'-2"	6	
R 23		6	12'-6"	6	
R 24		6	11'-10"	6	
R 25		6	11'-2"	6	
R 26		6	10'-6"	6	
R 27		6	9'-10"	6	
R 28		6	9'-2"	6	
R 29		6	8'-6"	6	
R 30		6	7'-10"	6	
R 31		6	7'-2"	6	
R 32		6	6'-6"	6	
R 33	↓	6	5'-10"	6	
R 34	Str.	6	5'-2"	18	
R 35	24	6	25'-3"	2	
R 36	↑	6	24'-7"	6	
R 37		6	23'-11"	6	
R 38		6	23'-3"	6	
R 39		6	22'-7"	6	
R 40		6	21'-11"	6	
R 41		6	21'-3"	6	
R 42		6	20'-7"	6	
R 43		6	19'-11"	6	
R 44		6	19'-3"	6	
R 45		6	18'-7"	6	
R 46	↓	6	17'-11"	6	
R 47	24	6	17'-3"	6	Slab(Transverse)

RAMP A

MARK	TYPE	SIZE	LENGTH	NO. OF BARS	LOCATION
R 48	24	6	16'-7"	6	Slab(Transverse)
R 49	↑	6	15'-11"	6	↑
R 50		6	15'-3"	6	
R 51		6	14'-7"	6	
R 52		6	13'-11"	6	
R 53		6	13'-3"	6	
R 54		6	12'-7"	6	
R 55		6	11'-11"	6	
R 56		6	11'-3"	6	
R 57		6	10'-7"	6	
R 58		6	9'-11"	6	
R 59		6	9'-3"	6	
R 60		6	8'-7"	6	
R 61		6	7'-11"	6	
R 62		6	7'-3"	6	
R 63	↑	6	6'-7"	6	
R 64	24	6	5'-11"	18	
R 65	2	6	27'-0"	4	
R 66	Str.	6	25'-4"	4	
R 67	24	6	23'-9"	4	
R 68	↑	6	22'-4"	4	
R 69		6	21'-0"	4	
R 70		6	19'-8"	4	
R 71		6	18'-4"	4	
R 72		6	17'-0"	4	
R 73		6	15'-8"	4	
R 74		6	14'-4"	4	
R 75		6	13'-0"	4	
R 76		6	11'-8"	4	
R 77		6	10'-4"	4	
R 78		6	9'-0"	4	
R 79	↓	6	7'-8"	4	
R 80	24	6	6'-4"	12	
R 81	Str.	6	22'-11"	4	
R 82	↑	6	21'-7"	4	
R 83		6	20'-3"	4	
R 84		6	18'-11"	4	
R 85		6	17'-7"	4	
R 86		6	16'-3"	4	
R 87		6	14'-11"	4	
R 88		6	13'-7"	4	
R 89		6	12'-3"	4	
R 90		6	10'-11"	4	
R 91		6	9'-7"	4	
R 92		6	8'-3"	4	
R 93	↓	6	6'-11"	4	↓
R 94	Str.	6	5'-7"	12	Slab(Transverse)

DESIGNED BY: CHECKED BY: DATE: REVISED: DATE:
DETAILED BY: L.M.H. CHECKED BY: DWH DATE: REVISED: DATE:
TRACED BY: CHECKED BY: DATE: REVISED: DATE:

BRIDGE OVER NORTH WESTERN PARKWAY AND 22ND STREET

SHEET 50 OF 63

COMMONWEALTH OF KENTUCKY
DEPARTMENT OF HIGHWAYS
FRANKFORT
COUNTY OF
JEFFERSON
I 64-CEDAR GROVE TERRACE TO 13TH STREET
LOUISVILLE-LEXINGTON
ROAD S.P. 56-273-111L

STATION 146+90 **PROJECT NO.** I 64-2(341)

BRIDGE NUMBER — DRAWING NO. 17123 — INDEX

SUPERSTRUCTURE

BILL OF REINFORCEMENT — SUPERSTRUCTURE

FED. ROAD DIST.	STATE	FED. AID PROJ. NO.	FISCAL YEAR	SHEET NO.	TOTAL SHEETS
7	KY.				

	MARK	TYPE	SIZE	LENGTH	NO. OF BARS	LOCATION
RAMP A	R95	Str.	4	29'-2"	129	Slab (Longitudinal)
	R96		5	29'-5"	102	
	R97		4	4'-2"	3	
	R98		4	5'-11"	3	
	R99		4	7'-10"	3	
	R100		4	9'-7"	3	
	R101		4	11'-2"	3	
	R102		4	12'-10"	3	
	R103		4	14'-6"	3	
	R104		4	16'-4"	3	
	R105		4	18'-2"	3	
	R106		4	19'-9"	3	
	R107		5	4'-9"	3	
	R108		5	6'-6"	3	
	R109		5	8'-3"	3	
	R110		5	10'-0"	3	
	R111		5	11'-9"	3	
	R112		5	13'-6"	3	
	R113		5	15'-3"	3	
	R114		5	17'-0"	3	
	R115		5	18'-9"	3	
	R116		5	20'-6"	3	
	R117		4	20'-10"	6	
	R118		5	21'-3"	2	
	R119		4	26'-6"	129	
	R120		5	26'-9"	102	
	R121		4	22'-3"	2	
	R122		4	23'-5"	2	
	R123		4	24'-8"	2	
	R124		4	25'-10"	2	
	R125		4	27'-1"	2	
	R126		4	28'-3"	2	
	R127		4	29'-5	2	
	R128		4	30'-2"	2	
	R129		4	31'-4"	2	
	R130		4	32'-7"	2	
	R131		4	33'-10"	2	
	R132		4	35'-0"	2	
	R133		4	36'-2"	2	
	R134		4	37'-4"	2	
	R135		4	38'-4"	2	
	R136		5	22'-3	2	
	R137		5	23'-5"	2	
	R138		5	24'-7"	2	
	R139		5	25'-9"	2	
	R140		5	26'-11"	2	
	R141		5	28'-1"	2	
	R142		5	29'-3"	2	
	R143		5	30'-5"	2	
	R144		5	31'-7"	2	
	R145		5	32'-9"	2	
	R146		5	33'-11"	2	
	R147		5	35'-1"	2	
	R148		5	36'-3"	2	
	R149		5	37'-5"	2	
	R150		5	38'-6"	2	
	R151		4	20'-5"	7	
	R152		5	21'-0"	2	
	R153		4	39'-8"	6	
	R154	Str.	5	39'-10"	2	Slab (Longitudinal)
RAMP A	R155	Str.	4	40'-0"	43	Slab (Longitudinal)
	R156		5	40'-0"	34	Slab (Longitudinal)
	R157		6	45'-0"	12	along Exp. Dam & Jt.
	R158		6	30'-0	8	along Exp. Dam & Jt.
	R159		4	12'-8"	4	Plinth
	R160		4	13'-0"	8	
	R161		4	7'-2"	4	
	R162		4	23'-1"	4	
	R163		4	22'-5"	8	
	R164		4	22'-1"	4	
	R165		4	6'-10"	4	
	R166		4	14'-7"	4	
	R167		4	22'-2"	8	
	R168		4	20'-3"	8	
	R169		4	19'-7"	8	
	R170		4	13'-4"	4	
	R171		4	15'-9"	8	
	R172		4	7'-6	4	
	R173		4	13'-8"	4	
	R174		4	23'-8"	8	
	R175		4	13'-10"	4	
	R176		4	6'-6"	4	
	R177		4	20'-3"	8	Plinth
	R178	Str.	4	14'-0"	56	Slab (Longitudinal)
AT DECK* DRAINS	D1	24	6	5'-1	20	
	D2	Str.	6	5'-6"	12	
	D3	24	6	4'-9"	24	
	D4	24	6	6'-5"	14	
AT LIGHT STDS.*	LS1	27	4	8'-8"	10	
	LS2	17	4	2'-11"	10	
	LS3	17	4	6'-11"	5	

* See Sheet No. 47

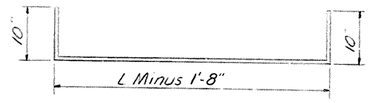

Type 2

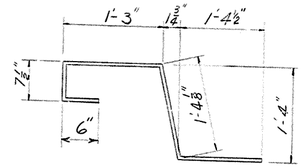

Type 22

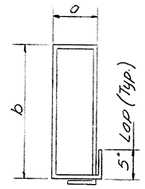

Type 23

MARK	a	b
E241	7½	1-10
W495	7½	1-10
E250	7	2-10
E252	7	1-10

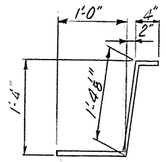

Type 28
(W497)

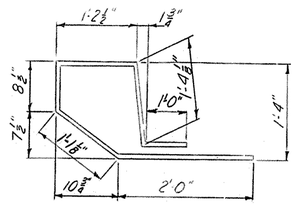

Type 30
(E239)

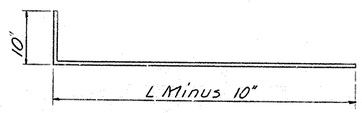

Type 24
(L = total length of Bar)

ESTIMATE OF QUANTITIES

ITEM	UNIT	AMOUNT			
		Westbound	Eastbound	Ramp A	Total
Concrete Class AA	Cu. Yds.	739.3	838.3	223.0	1800.6
Steel Reinforcement	Lbs.	226,705	248,142	62,160	537,007
High Strength Handrail	Lin. Ft.	377.1	595.5	477.9	1,450.5
Protective Coating	Sq. Yds	2750	3512	848	7,110

	MARK	TYPE	SIZE	LENGTH	NO. OF BARS	LOCATION
EASTBOUND	E253	24	6	7'-5"	14	Slab (Transverse)
	E254			8'-4"	4	
	E255			9'-4"		
	E256			10'-2"		
	E257			11'-2"		
	E258			12'-0"		
	E259			13'-0"		
	E260			14'-0"		
	E261			15'-0"		
	E262			15'-10"		
	E263			16'-9"		
	E264			17'-9"		
	E265			18'-8"		
	E266			19'-7"	4	
	E267			8'-2"	14	
	E268			9'-4"	4	
	E269			10'-5"		
	E270			11'-6"		
	E271			12'-8"		
	E272			13'-10"		
	E273			15'-0"		
	E274			16'-0"		
	E275			17'-2"		
	E276	24	6	18'-4"	4	Slab (Transverse)
	E277	Str.	4	19'-0"	18	Plinth
	E278	Str.	4	20'-6"	18	Plinth
	E279	Str.	4	21'-4"	18	Plinth
	E280	24	6	20'-9"	786	Slab (Transverse)
	E281	Str.	9	8'-0"	8	Median Wall

DESIGNED BY N.J.E. CHECKED BY DATE
DETAILED BY DMH CHECKED BY DATE
TRACED BY CHECKED BY DATE
REVISED. DATE
REVISED. DATE
REVISED. DATE

BRIDGE OVER NORTH WESTERN PARKWAY AND 22ND STREET

SHEET 51 OF 63

COMMONWEALTH OF KENTUCKY
DEPARTMENT OF HIGHWAYS
FRANKFORT
COUNTY OF
JEFFERSON
164-CEDAR GROVE TERRACE TO 13TH STREET
LOUISVILLE-LEXINGTON ROAD
S.P. 56-273-IIL

STATION 146+90 PROJECT NO. 164-2(34)I

BRIDGE NUMBER | DRAWING NO. 17123 | INDEX

SUPERSTRUCTURE

FED. ROAD DIST.	STATE	FED. AID PROJ. NO.	FISCAL YEAR	SHEET NO.	TOTAL SHEETS
7	KY.				

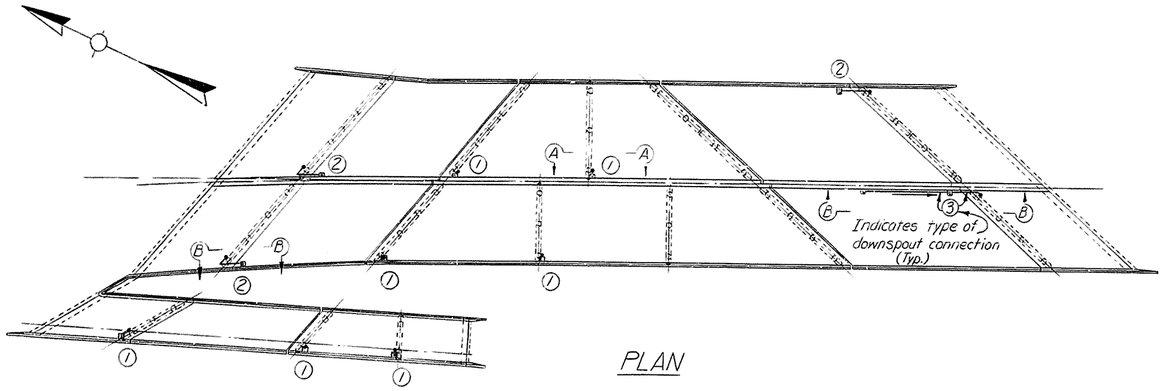

PLAN

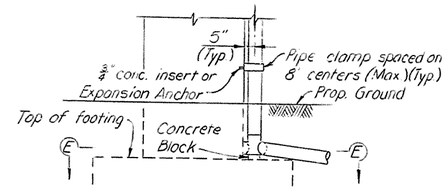

DRAINAGE AT FOOTING

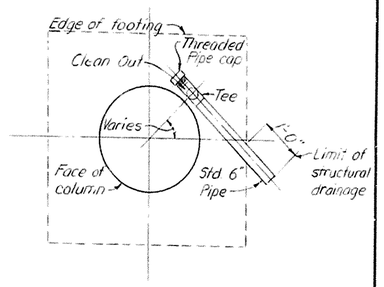

SECTION E-E

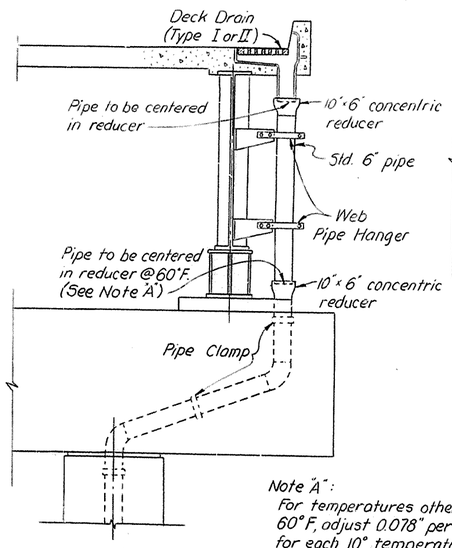

Note "A":
For temperatures other than 60°F, adjust 0.078" per 100' for each 10° temperature change (Typ.)

SECTION C-C

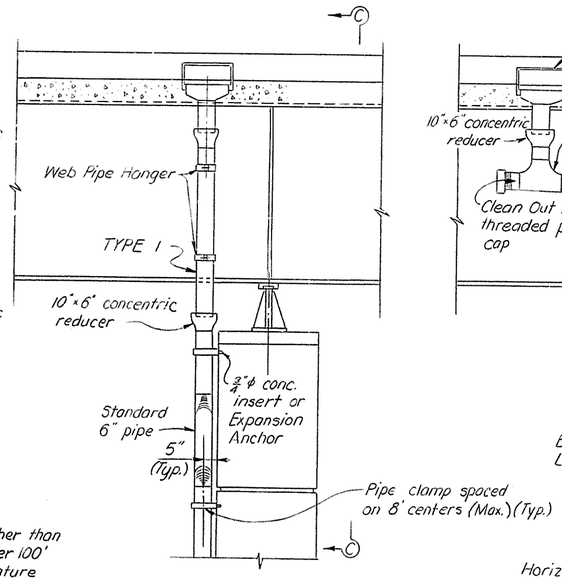

SECTION A-A

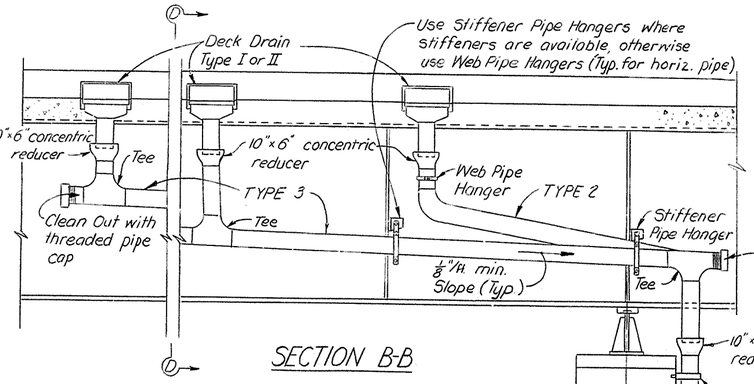

SECTION B-B

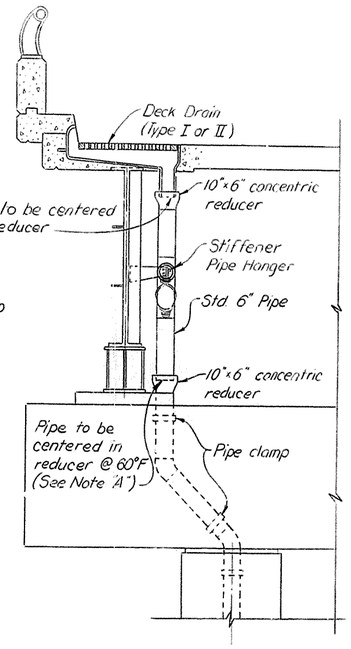

SECTION D-D

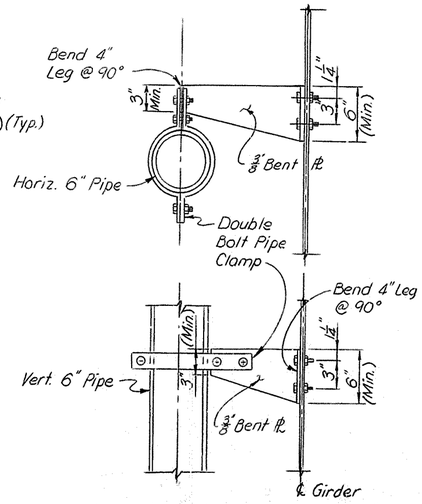

WEB PIPE HANGER

ESTIMATED QUANTITIES

6"φ Drain Pipe	405 Lin. Ft.

Notes:
All anchoring devices for pipe drains shall be so constructed as to be rattle free and secured against rotation or translation.
All pipe shall be supported every 10' maximum horizontally and 8' maximum vertically.
Pipe shall be cut & welded to field dimensions.
All pipe connections shall be leak proof.
For Material Specifications and other notes see General Notes, Sheet No. 2.
Shop drawings are required for drainage details.
Locate all downspouts on columns as shown in plan.

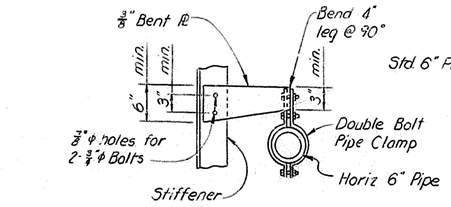

STIFFENER PIPE HANGER

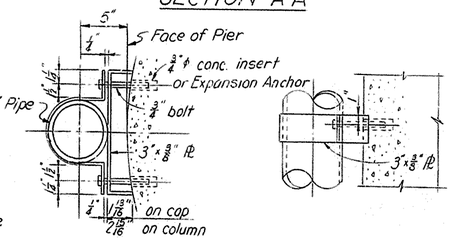

PIPE CLAMP

BRIDGE OVER NORTH WESTERN PARKWAY AND 22ND STREET

SHEET 52 OF 63

COMMONWEALTH OF KENTUCKY
DEPARTMENT OF HIGHWAYS
FRANKFORT
COUNTY OF
JEFFERSON

I64-CEDAR GROVE TERRACE TO 13TH STREET
LOUISVILLE-LEXINGTON ROAD

S.P. 56-273-11L

STATION 146+90 **PROJECT NO.** I64-2(34)1

BRIDGE NUMBER

DRAWING NO. 17123

INDEX

DRAIN DETAILS

DESIGNED BY ... DATE ... REVISED ... DATE ...
DETAILED BY DMH 4.22.66 CHECKED BY TIG DATE 2-66 REVISED ... DATE ...
TRACED BY ... CHECKED BY ... DATE ... REVISED ... DATE ...

JBW

DIETZGEN NO. 130-S ASEPROOF

FED. ROAD DIST.	STATE	FED. AID PROJ. NO.	FISCAL YEAR	SHEET NO.	TOTAL SHEETS
7	KY.				

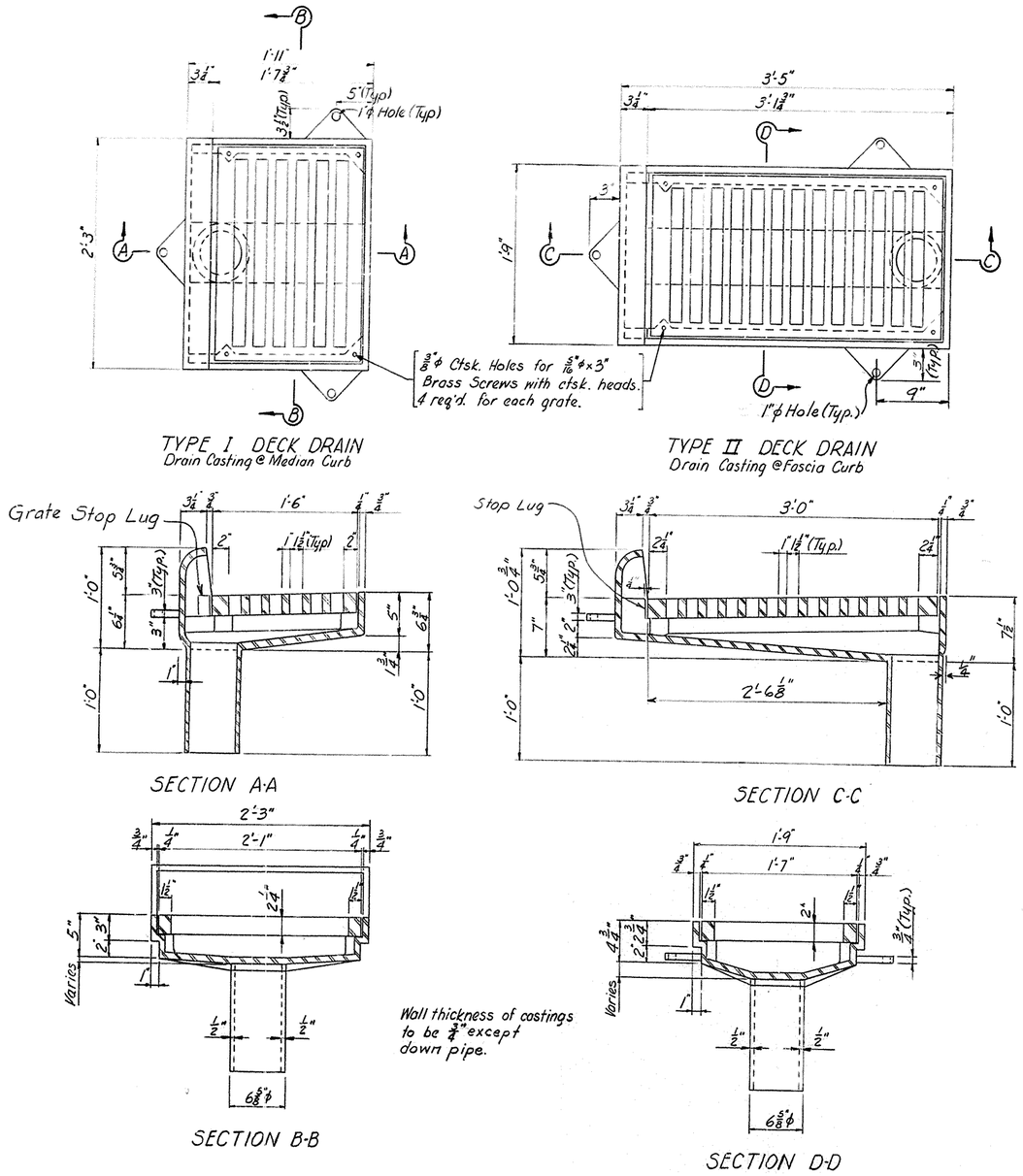

Foundary Notes
Body of Drain Casting shall be Gray Cast Iron ASTM A48, Class No. 30A.
Drain Grates shall be Cast Steel, ASTM A27, Grade 70-36
Fit grate to body and ship in place.
Form T-521 report of field inspection of castings is to be submitted to the laboratory.
Payment for drain castings will be included in lump sum bid price of Structural Steel.
For Surface Coating and Finish see Note Sheet.

DRAIN DETAILS

BRIDGE OVER NORTH WESTERN PARKWAY AND 22ND STREET

SHEET 53 OF 63

COMMONWEALTH OF KENTUCKY
DEPARTMENT OF HIGHWAYS
FRANKFORT
COUNTY OF
JEFFERSON
164-CEDAR GROVE TERRACE TO 13TH STREET
LOUISVILLE-LEXINGTON
ROAD

STATION 146+90

PROJECT NO. SP 56-273-IIL
164-2(341)

BRIDGE NUMBER

DRAWING NO. 17123

INDEX

DESIGNED BY: CHECKED BY: DATE: REVISED: DATE:
DETAILED BY: CHECKED BY: DATE: REVISED: DATE:
TRACED BY: CHECKED BY: DATE: REVISED: DATE:

DIETZGEN NO. 195-9 ASEPROOF

SECTION	TABLE OF ELEVATIONS GIRDER A' X	Y	Z
13	477.233		
14	477.325		
15	477.408		
16	477.439		
17	477.560		
18	477.606		
℄ Susp. @ Pier No. 1	477.638		

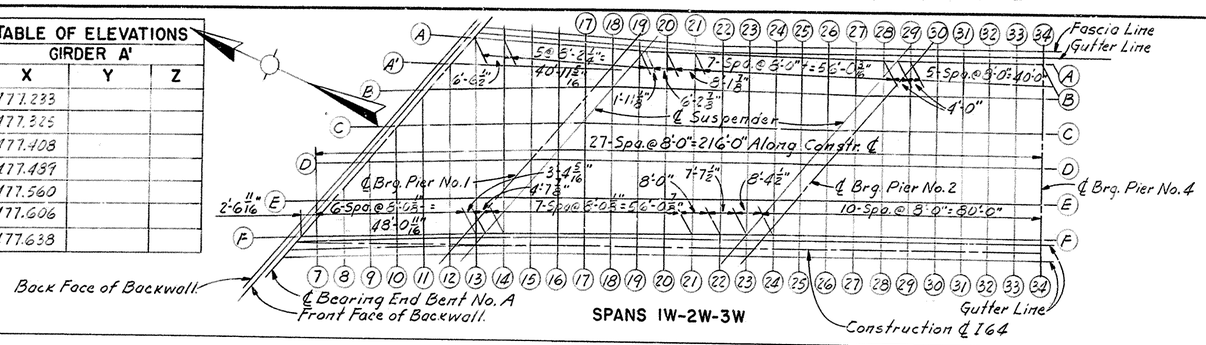

	END BENT A BACK FACE BACKWALL	FRONT FACE BACKWALL	℄ BEARING	PIER NO. 1 ℄ BEARING	PIER NO. 2 ℄ BEARING
NORTH GUTTER	477.526	477.543	477.560	477.647	477.773
GIRDER A	477.458	477.475	477.492	477.796	477.745
GIRDER A'	477.131	477.153	477.175	477.623	———
GIRDER B	476.801	476.829	476.855	477.417	477.568
GIRDER C	476.356	476.384	476.411	476.997	477.365
GIRDER D	475.904	475.933	475.962	476.571	477.130
GIRDER E	475.447	475.478	475.507	476.141	476.865
GIRDER F	474.984	475.016	475.047	475.706	476.572
SOUTH GUTTER	474.871	474.903	474.935	475.594	476.482

FED. ROAD DIST.	STATE	FED. AID PROJ. NO.	FISCAL YEAR	SHEET NO.	TOTAL SHEETS
7	KY.				

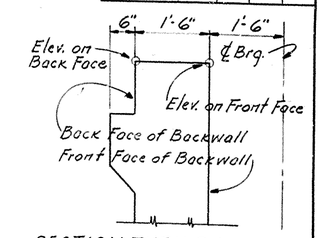

SECTION THRU BACKWALL

TABLE OF ELEVATIONS

SECTION	GIRDER A W	X@GUTTER	Y	Z	GIRDER B X	Y	Z	GIRDER C X	Y	Z	GIRDER D X	Y	Z	GIRDER E X	Y	Z	GIRDER F X@GUTTER	Y	Z	W
7																				
8																	475.010			2'-5 1/8"
9														475.519			475.139			2'-4 1/2"
10														475.640			475.251			2'-4 1/4"
11											476.061			475.748			475.362			2'-4 1/8"
12					476.911			476.486			476.174			475.858			475.466			2'-4 3/8"
13					477.014			476.698			476.378			475.961			475.566			2'-5"
14	1'-9"	477.612			477.116			476.797			476.476			476.058			475.664			2'-5 3/4"
15		477.681			477.210			476.889			476.568			476.156			475.776			2'-5 1/2"
16		477.748			477.301			476.978			476.664			476.260			475.892			2'-4 3/8"
17		477.804			477.387			477.067			476.774			476.372			475.998			2'-4 1/8"
18		477.833			477.449			477.155			476.863			476.478			476.095			2'-3 3/4"
19	1'-9"	477.848			477.515			477.229			476.940			476.568			476.182			2'-3 3/4"
20	1'-5 1/8"	477.863			477.560			477.285			476.994			476.642			476.259			2'-4"
21	1'	477.879			477.599			477.326			477.043			476.702			476.326			2'-4 1/2"
22	8 5/8"	477.892			477.625			477.356			477.074			476.752			476.380			2'-5 1/4"
23	10 1/2"	477.906			477.639			477.373			477.096			476.788			476.422			2'-6 1/8"
24	1'-0 3/8"	477.911			477.642			477.380			477.107			476.816			476.462			2'-7"
25	1'-2 1/4"	477.903			477.633			477.375			477.109			476.835			476.510			
26	1'-4 1/4"	477.882			477.615			477.361			477.130			476.874			476.596			
27	1'-6 1/8"	477.853			477.587			477.364			477.157			476.918			476.656			
28	1'-8"	477.814			477.569			477.372			477.180			476.959			476.711			
29	1'-9"	477.783			477.564			477.381			477.201			476.994			476.758			
30		477.761			477.557			477.385			477.214			477.022			476.797			
31		477.738			477.546			477.381			477.221			477.059			476.833			
32		477.709			477.527			477.375			477.221			477.068			476.875			
33		477.673			477.504			477.362			477.220			477.077			476.898			
34	1'-9"	477.630			477.477			477.347			477.217			477.086			476.923			2'-7"
℄ Susp. @ Pier No. 1		477.845			477.455			477.064			476.642			476.215			475.677			
℄ Susp. @ Pier No. 2		477.793			477.575			477.357			477.109			476.835			476.492			

TABLE OF ELEVATIONS FOR CONTROL OF SLAB THICKNESS

SLAB* CHECK POINT	TOP OF SLAB ELEVATION	BOTTOM OF SLAB ELEVATION	COMP. SLAB T'NESS	SLAB CHECK POINT	TOP OF SLAB ELEVATION	BOTTOM OF SLAB ELEVATION	COMP. SLAB T'NESS
EF 8	475.365			EF 21	476.598		
DE 10	475.904			DE 23	476.956		
EF 10	475.591			AB 24	477.764		
CD 11	476.330			BC 24	477.511		
BC 12	476.753			CD 24	477.242		
EF 12	475.802			EF 25	476.763		
DE 13	476.218			AB 26	477.732		
AA' 14	477.439			DE 26	477.024		
AB 14	477.220			EF 27	476.860		
CD 14	476.636			CD 28	477.276		
BC 15	477.049			DE 28	477.087		
AA' 16	477.591			AB 30	477.644		
AB 16	477.395			BC 30	477.471		
EF 16	476.217			CD 30	477.299		
DE 17	476.626			DE 30	477.129		
CD 18	477.009			EF 30	476.958		
BC 19	477.372			AB 33	477.579		
DE 19	476.791			BC 33	477.433		
EF 19	476.482			CD 33	477.291		
AB 21	477.726			DE 33	477.148		
BC 21	477.462			EF 33	477.006		
CD 21	477.184						
DE 21	476.897						

NOTE

After the slab forms are erected and before the slab reinforcement is placed, the Resident Engineer shall take field elevations of the slab thickness check points and enter them in the table in the space provided. The slab thickness shall then be computed. If the computed slab thickness varies more than 1/4" from the plan thickness, allowing 1/360 of the slab span for deflection of the form work, the form shall be adjusted until the computed slab thickness is within the tolerance allowed.

* All slab check points are located midway between the two girders shown in the prefix, such as AB, and along the Section No. designated such as 33.

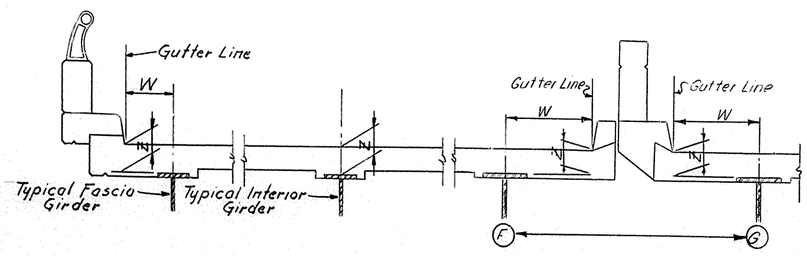

TYPICAL SECTION

CONSTRUCTION NOTES

1. Lay out Sections 1 1, 2 2 etc. as shown in plan on the Various Construction Elevation sheets. Center punch marks on top of Girders for elevation points.
2. Read elevations on top of Girders as erected, after diaphragms and cross frames are in place and shoring and falsework are removed, but before forms are placed and before deck slab, walk, plinths, etc. are poured. These elevations are to be entered in table as elevation "Y".
3. Compute Dimension "Z" (see Typical Sections). Top of concrete Elevation "X" minus Elevation "Y" equals Dimension "Z".
4. Always measure from top of Girder to top of slab (Dimension "Z") for setting templates. DO NOT set templates by Elevation "X".
5. Elevations "X" include calculated deflections due to weight of floor slab, walks, plinths, handrail, and median.
6. Gutter line elevations (X @ Gutter) contain the deflections of the adjacent Girder as shown in Typical Sections. Dimension "Z" will indicate the difference in elevation of the top of Girder at the center punch mark and the gutter line at a point measured along the section line Dimension "W" from the ℄ of the Girder (center punch mark).

DESIGNED BY L.M.H. CHECKED BY DATE
DETAILED BY L.M.H. CHECKED BY DATE 2-54
TRACED BY CHECKED BY DATE
REVISED DATE REVISED DATE REVISED DATE

BRIDGE OVER NORTH WESTERN PARKWAY AND 22ND STREET

SHEET 54 OF 63

COMMONWEALTH OF KENTUCKY
DEPARTMENT OF HIGHWAYS
FRANKFORT
COUNTY OF
JEFFERSON
I 64-CEDAR GROVE TERRACE TO 13TH STREET
LOUISVILLE-LEXINGTON
ROAD
S.P. 56-273 III.

STATION 146+90 PROJECT NO. I 64-2(34)1

BRIDGE NUMBER

DRAWING NO. 17123

INDEX

CONSTRUCTION ELEVATIONS

FED. ROAD DIST.	STATE	FED. AID PROJ. NO.	FISCAL YEAR	SHEET NO.	TOTAL SHEETS
7	KY.				

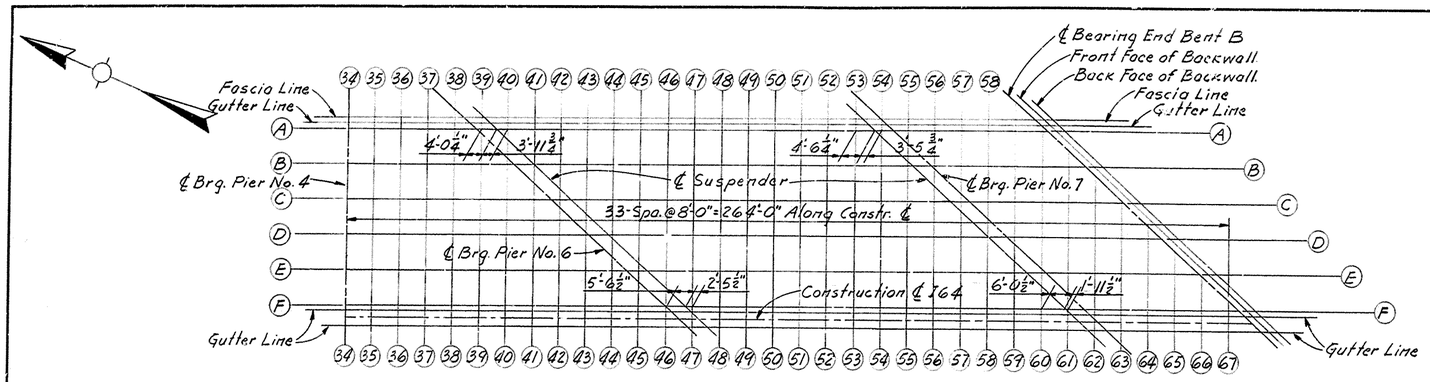

	PIER NO. 4	PIER NO. 6	PIER NO. 7	END BENT B		
	℄ BEARING	℄ BEARING	℄ BEARING	BACK FACE BACKWALL	FRONT FACE BACKWALL	℄ BEARING
NORTH GUTTER	477.630	477.412	476.056	475.240	475.279	475.318
GIRDER A	477.606	477.386	476.044	475.230	475.274	475.313
GIRDER B	477.476	477.239	475.984	475.206	475.248	475.285
GIRDER C	477.346	477.116	475.948	475.206	475.246	475.281
GIRDER D	477.216	477.017	475.936	475.231	475.267	475.302
GIRDER E	477.086	476.942	475.949	475.279	475.313	475.346
GIRDER F	476.956	476.891	476.064	475.351	475.383	475.415
SOUTH GUTTER	476.923	476.883	475.999	475.373	475.405	475.436

SPANS 4W-6W-7W

TABLE OF ELEVATIONS

SECTION	GIRDER A				GIRDER B			GIRDER C			GIRDER D			GIRDER E			GIRDER F			
	W	X@GUTTER	Y	Z	X	Y	Z	X	Y	Z	X	Y	Z	X	Y	Z	X@GUTTER	Y	Z	W
35	1'-9"	477.588			477.449			477.332			477.215			477.097			476.949			2'-7"
36	↓	477.538			477.418			477.316			477.213			477.109			476.977			↓
37		477.484			477.381			477.294			477.205			477.119			477.011			
38		477.434			477.339			477.266			477.191			477.123			477.036			
39		477.383			477.292			477.230			477.171			477.117			477.050			
40		477.348			477.245			477.188			477.141			477.105			477.056			
41		477.322			477.200			477.143			477.105			477.081			477.050			
42		477.288			477.194			477.098			477.062			477.049			477.035			
43		477.246			477.175			477.080			477.019			477.008			477.010			
44		477.191			477.147			477.071			476.984			476.962			476.973			
45		477.127			477.109			477.052			476.986			476.922			476.931			
46		477.052			477.059			477.024			476.976			476.917			476.890			
47		476.964			476.992			476.985			476.960			476.919			476.867			
48		476.863			476.917			476.934			476.931			476.911			476.879			
49		476.752			476.831			476.871			476.891			476.892			476.883			
50		476.631			476.733			476.796			476.840			476.863			476.872			
51		476.500			476.619			476.708			476.775			476.822			476.855			
52		476.358			476.498			476.607			476.699			476.769			476.828			
53		476.206			476.364			476.495			476.609			476.704			476.789			
54		476.065			476.222			476.372			476.507			476.626			476.736			
55		475.941			476.069			476.240			476.396			476.536			476.673			
56		475.820			475.955			476.095			476.272			476.434			476.598			
57		475.697			475.840			475.968			476.138			476.322			476.510			
58		475.567			475.726			475.859			476.000			476.200			476.413			
59		475.431			475.606			475.750			475.898			476.065			476.306			
60		475.292			475.482			475.639			475.794			475.955			476.188			
61					475.351			475.523			475.691			475.857			476.076			
62								475.400			475.581			475.759			475.986			
63											475.467			475.659			475.898			
64											475.348			475.553			475.807			
65														475.440			475.711			
66																	475.610			
67	1'-9"																475.504			2'-7"
℄ Susp. @ Pier 6		477.373			477.202			477.082			476.985			476.910			476.849			
℄ Susp. @ Pier 7		476.140			476.070			476.030			476.012			476.023			476.067			

TABLE OF ELEVATIONS FOR CONTROL OF SLAB THICKNESS

SLAB* CHECK POINT	TOP OF SLAB ELEVATION	BOTTOM OF SLAB ELEVATION	COMP. SLAB T'NESS	SLAB CHECK POINT	TOP OF SLAB ELEVATION	BOTTOM OF SLAB ELEVATION	COMP. SLAB T'NESS
AB 35	477.508			EF 49	476.881		
BC 35	477.390			AB 52	476.438		
CD 35	477.273			BC 52	476.552		
DE 35	477.156			CD 52	476.653		
EF 35	477.037			DE 52	476.734		
AB 38	477.380			EF 52	476.782		
BC 38	477.302			BC 54	476.297		
CD 38	477.228			CD 55	476.318		
DE 38	477.157			DE 55	476.466		
EF 38	477.085			EF 55	476.582		
BC 40	477.216			AB 57	475.779		
CD 41	477.124			DE 57	476.230		
DE 41	477.093			BC 58	475.792		
EF 41	477.064			EF 58	476.280		
AB 43	477.205			AB 59	475.532		
BC 43	477.127			CD 59	475.824		
DE 43	477.013			BC 61	475.437		
EF 44	476.965			DE 61	475.774		
AB 46	477.055			CD 62	475.490		
BC 46	477.041			EF 62	475.849		
CD 46	477.000			DE 64	475.450		
DE 46	476.946			EF 65	475.548		
AB 49	476.797						
BC 49	476.851						
CD 49	476.881						
DE 49	476.891						

NOTE:
For notes concerning the use of this table see Sheet No. 54.
*All slab check points are located midway between the two girders shown in the prefix, such as AB, and along the Section No. designated, such as 35.
For Construction Notes and Typical Section see Sheet No. 54.

BRIDGE OVER NORTH WESTERN PARKWAY AND 22ND STREET

SHEET 55 OF 63

COMMONWEALTH OF KENTUCKY
DEPARTMENT OF HIGHWAYS
FRANKFORT
COUNTY OF
JEFFERSON
I 64-CEDAR GROVE TERRACE TO 13TH STREET
LOUISVILLE-LEXINGTON ROAD
S.P. 56-273 IIL
STATION 146+90
PROJECT NO. I 64-2(34)1
BRIDGE NUMBER
DRAWING NO. 17123
INDEX

DESIGNED BY
DETAILED BY L.M.H.
TRACED BY
CHECKED BY DMB & CJC DATE 8-29
CHECKED BY
CHECKED BY
REVISED
REVISED
REVISED

CONSTRUCTION ELEVATIONS

GIRTSHEET NO. 136-3 LOUISPROOF

FED. ROAD DIST.	STATE	FED. AID PROJ. NO.	FISCAL YEAR	SHEET NO.	TOTAL SHEETS
7	KY.				

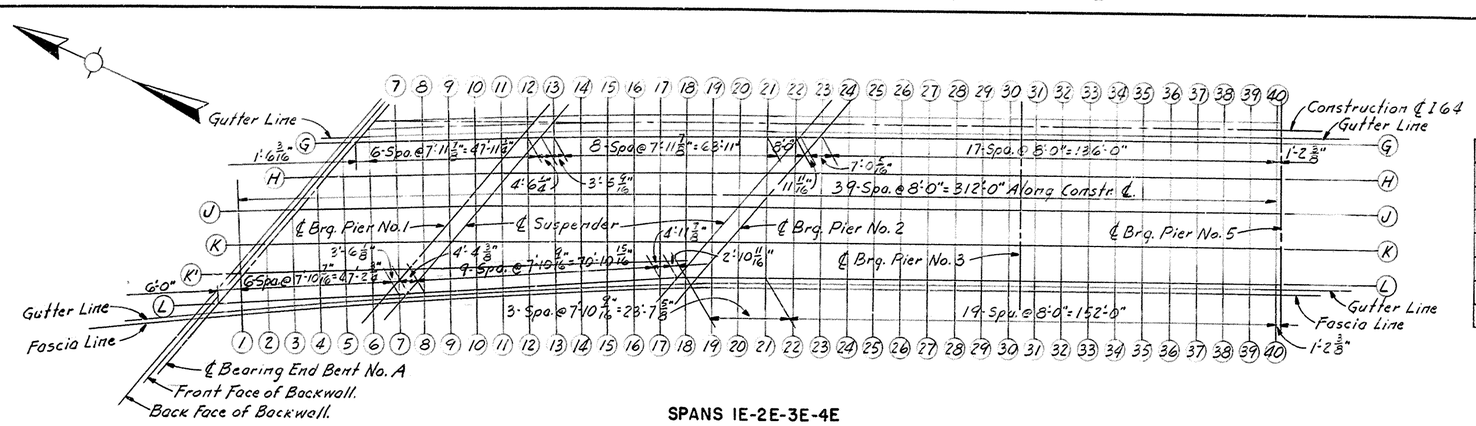

SPANS 1E-2E-3E-4E

	END BENT A			PIER NO. 1	PIER NO. 2	PIER NO. 3
	BACK FACE BACKWALL	FRONT FACE BACKWALL	℄ BEARING	℄ BEARING	℄ BEARING	℄ BEARING
NORTH GUTTER	475.029	475.059	475.091	475.764	476.630	476.929
GIRDER G	474.915	474.947	474.979	475.656	476.549	476.885
GIRDER H	474.467	474.500	474.533	475.234	476.215	476.715
GIRDER J	474.013	474.047	474.081	474.807	475.850	476.545
GIRDER K	473.554	473.589	473.624	474.374	475.457	476.375
GIRDER K'	473.150	473.189	473.228	474.056	——	——
GIRDER L	472.742	472.784	472.826	473.735	475.032	476.205
SOUTH GUTTER	472.649	472.693	472.737	473.654	474.959	476.174

TABLE OF ELEVATIONS

SECTION	GIRDER G				GIRDER H			GIRDER J			GIRDER K			GIRDER K'			GIRDER L			
	W	X@GUTTER	Y	Z	X	Y	Z	X	Y	Z	X	Y	Z	X	Y	Z	X@GUTTER	Y	Z	W
1																	472.893			1'-8 1/4"
2														473.342			473.046			1'-7 3/8"
3											473.727			473.483			473.193			1'-7 3/8"
4								474.159			473.862			473.618			473.335			1'-7 1/4"
5					474.586			474.289			473.988			473.750			473.470			1'-7 3/8"
6	2'-5 1/2"	475.080			474.713			474.411			474.108			473.874			473.602			1'-7 3/8"
7	2'-6 3/8"	475.207			474.834			474.531			474.226			474.000			473.732			1'-8 5/8"
8	2'-6 7/8"	475.328			474.948			474.643			474.340			474.117			473.871			1'-8 1/2"
9	2'-7 1/4"	475.443			475.060			474.754			474.450			474.253			474.015			1'-7 3/8"
10	2'-7 1/4"	475.551			475.166			474.864			474.576			474.380			474.150			1'-7 1/2"
11	2'-7"	475.654			475.273			474.988			474.701			474.502			474.277			1'-7 3/8"
12	2'-6 1/2"	475.757			475.387			475.113			474.810			474.619			474.393			1'-7 1/2"
13	2'-6 5/8"	475.869			475.512			475.230			474.917			474.724			474.499			1'-7 3/8"
14	2'-7 3/4"	475.990			475.623			475.333			475.014			474.820			474.595			1'-8 1/2"
15	2'-8 5/8"	476.101			475.731			475.428			475.099			474.911			474.684			1'-9 1/2"
16	2'-9 1/8"	476.201			475.822			475.512			475.176			474.995			474.760			1'-10 3/4"
17	2'-9 1/2"	476.292			475.900			475.581			475.239			475.065			474.826			2'-0 1/8"
18	2'-9 1/2"	476.369			475.977			475.652			475.312			475.155			474.928			1'-11 3/4"
19	2'-9 1/4"	476.435			476.039			475.717			475.391						475.070			1'-9 1/2"
20	2'-8 3/4"	476.487			476.105			475.785			475.515						475.213			1'-9 1/8"
21	2'-8"	476.531			476.154			475.885			475.638						475.353			1'-9"
22	2'-7 1/2"	476.564			476.233			475.987			475.753						475.484			
23	2'-7"	476.620			476.313			476.083			475.862						475.607			
24		476.679			476.389			476.170			475.960						475.714			
25		476.731			476.458			476.249			476.047						475.808			
26		476.777			476.518			476.319			476.124						475.893			
27		476.817			476.571			476.378			476.191						475.966			
28		476.850			476.617			476.432			476.250						476.033			
29		476.885			476.658			476.480			476.302						476.092			
30		476.918			476.698			476.526			476.354						476.151			
31		476.949			476.741			476.574			476.406						476.212			
32		476.986			476.784			476.623			476.460						476.274			
33		477.019			476.829			476.671			476.514						476.336			
34		477.046			476.866			476.717			476.565						476.398			
35		477.062			476.895			476.755			476.616						476.457			
36		477.070			476.917			476.788			476.660						476.514			
37		477.067			476.930			476.814			476.697						476.569			
38		477.056			476.934			476.835			476.735						476.622			
39		477.037			476.935			476.853			476.770						476.674			
40	2'-7"	477.017			476.936			476.870			476.806						476.729			1'-9"

TABLE OF ELEVATIONS FOR CONTROL OF SLAB THICKNESS

SLAB* CHECK POINT	TOP OF SLAB ELEVATION	BOTTOM OF SLAB ELEVATION	COMP. SLAB T'NESS	SLAB CHECK POINT	TOP OF SLAB ELEVATION	BOTTOM OF SLAB ELEVATION	COMP. SLAB T'NESS
K'L 2	473.216			GH 23	476.435		
KK' 3	473.605			HJ 23	476.198		
JK 4	474.010			JK 23	475.972		
K'L 4	473.498			KL 23	475.753		
HJ 6	474.562			GH 26	476.620		
K'L 6	473.763			HJ 26	476.418		
GH 7	474.983			JK 26	476.221		
JK 7	474.378			KL 26	476.026		
KK' 7	474.113			GH 29	476.748		
HJ 9	474.907			HJ 29	476.569		
K'L 9	474.157			JK 29	476.391		
GH 10	475.318			KL 29	476.213		
KK' 10	474.478			GH 32	476.863		
HJ 12	475.250			HJ 32	476.703		
JK 12	474.961			JK 32	476.541		
KK' 12	474.714			KL 32	476.381		
K'L 12	474.529			GH 34	476.936		
GH 14	475.764			HJ 34	476.791		
HJ 14	475.478			JK 34	476.641		
JK 14	475.173			KL 34	476.494		
KK' 14	474.917			GH 37	476.983		
K'L 14	474.734			HJ 37	476.872		
GH 17	476.049			JK 37	476.755		
HJ 17	475.740			KL 37	476.642		
JK 17	475.410			GH 39	476.975		
K'L 17	474.979			HJ 39	476.894		
HJ 19	475.878			JK 39	476.811		
GH 20	476.252			KL 39	476.729		
KL 20	475.387			KK' 17	475.152		
JK 21	475.761			KL 21	475.517		

NOTE:
* For notes concerning the use of this table, see Sheet No. 54. All slab check points are located midway between the two girders shown in the prefix, such as GH, and along the Section No. designated such as 34.

For Construction Notes and Typical Section see Sheet No. 54.

BRIDGE OVER NORTH WESTERN PARKWAY AND 22ND STREET

SHEET 56 OF 63

CONSTRUCTION ELEVATIONS

COMMONWEALTH OF KENTUCKY
DEPARTMENT OF HIGHWAYS
FRANKFORT
COUNTY OF
JEFFERSON
I 64-CEDAR GROVE TERRACE TO 13TH STREET
LOUISVILLE-LEXINGTON ROAD
S.P. 56-273 III.

STATION 146+90 PROJECT NO. I 64-2(34)1

BRIDGE NUMBER

DRAWING NO. 17123

INDEX

DESIGNED BY DMB & L.J.C. DATE 8-29
DETAILED BY L.M.H. CHECKED BY DATE
TRACED BY CHECKED BY DATE
REVISED DATE
REVISED DATE
REVISED DATE

FED. ROAD DIST.	STATE	FED. AID PRO. NO.	FISCAL YEAR	SHEET NO.	TOTAL SHEETS
7	KY.				

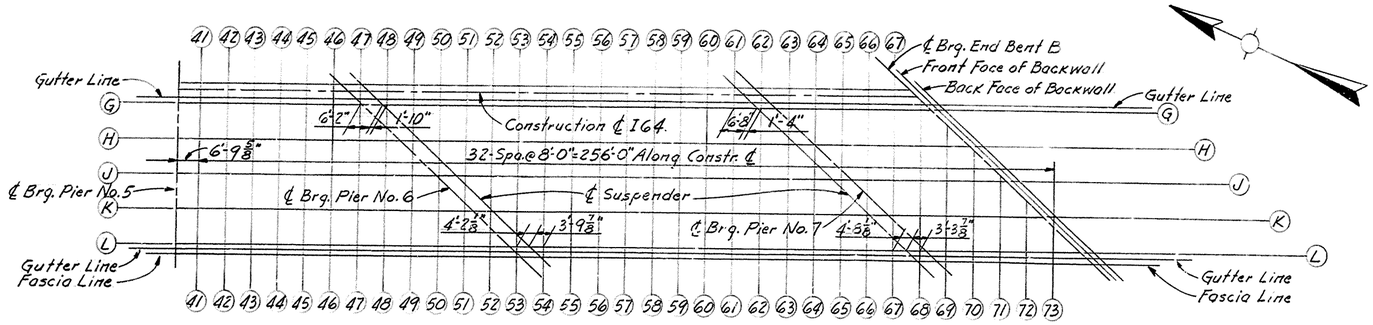

SPANS 5E-6E-7E

	PIER NO.5	PIER NO.6	PIER NO.7	END BENT B		
	℄ BEARING	℄ BEARING	℄ BEARING	BACK FACE BACKWALL	FRONT FACE BACKWALL	℄ BEARING
NORTH GUTTER	477.013	476.867	475.856	475.180	475.214	475.247
GIRDER G	476.997	476.857	475.869	475.202	475.235	475.269
GIRDER H	476.935	476.835	475.934	475.302	475.334	475.366
GIRDER J	476.873	476.837	476.023	475.426	475.456	475.487
GIRDER K	476.811	476.862	476.203	475.574	475.603	475.632
GIRDER L	476.749	476.912	476.272	475.746	475.774	475.801
SOUTH GUTTER	476.740	476.924	476.300	475.778	475.806	475.829

TABLE OF ELEVATIONS

SECTION	GIRDER G				GIRDER H			GIRDER J			GIRDER K			GIRDER L			
	W	X@GUTTER	Y	Z	X	Y	Z	X	Y	Z	X	Y	Z	X@GUTTER	Y	Z	W
41	2'-7"	477.001			476.937			476.890			476.844			476.791			1'-9"
42		476.981			476.939			476.910			476.882			476.855			
43		476.959			476.937			476.926			476.918			476.917			
44		476.935			476.931			476.937			476.948			476.969			
45		476.911			476.918			476.940			476.968			477.012			
46		476.885			476.894			476.932			476.976			477.044			
47		476.854			476.875			476.915			476.973			477.061			
48		476.831			476.848			476.892			476.960			477.066			
49		476.832			476.823			476.864			476.937			477.055			
50		476.824			476.827			476.835			476.908			477.028			
51		476.804			476.836			476.826			476.874			476.997			
52		476.774			476.833			476.841			476.841			476.960			
53		476.735			476.820			476.849			476.863			476.918			
54		476.685			476.796			476.847			476.880			476.908			
55		476.622			476.759			476.834			476.889			476.936			
56		476.546			476.710			476.809			476.888			476.953			
57		476.460			476.650			476.772			476.873			476.962			
58		476.364			476.574			476.723			476.847			476.959			
59		476.256			476.490			476.661			476.808			476.945			
60		476.138			476.393			476.587			476.758			476.921			
61		476.009			476.285			476.499			476.696			476.883			
62		475.879			476.169			476.401			476.621			476.835			
63		475.778			476.040			476.296			476.534			476.776			
64		475.678			475.936			476.179			476.438			476.707			
65		475.578			475.844			476.063			476.330			476.625			
66		475.472			475.753			475.976			476.213			476.535			
67		475.360			475.658			475.891			476.128			476.435			
68	2'-7"	475.244			475.557			475.803			476.047			476.339			
69					475.450			475.710			475.967			476.268			
70								475.612			475.882			476.196			
71								475.509			475.793			476.121			
72											475.696			476.040			
73														475.956			1'-9"
℄ Susp. @ Pier 1		475.840			475.316			474.890			474.463			473.759			
℄ Susp. @ Pier 2		476.587			476.154			475.776			475.366			474.852			
℄ Susp. @ Pier 6		476.847			476.832			476.820			476.841			476.889			
℄ Susp. @ Pier 7		475.930			476.004			476.089			476.198			476.355			

TABLE OF ELEVATIONS FOR CONTROL OF SLAB THICKNESS

SLAB* CHECK POINT	TOP OF SLAB ELEVATION	BOTTOM OF SLAB ELEVATION	COMP. SLAB T'NESS	SLAB CHECK POINT	TOP OF SLAB ELEVATION	BOTTOM OF SLAB ELEVATION	COMP. SLAB T'NESS
GH 42	476.955			JK 57	476.822		
HJ 42	476.925			KL 57	476.910		
JK 42	476.896			GH 60	476.285		
KL 42	476.871			HJ 60	476.490		
GH 45	476.914			JK 60	476.672		
HJ 45	476.929			KL 60	476.827		
JK 45	476.954			HJ 62	476.285		
KL 45	476.987			JK 63	476.415		
GH 47	476.867			KL 63	476.637		
HJ 48	476.870			GH 65	475.738		
JK 48	476.926			KL 65	476.456		
KL 48	477.006			HJ 66	475.864		
JK 50	476.871			GH 68	475.433		
KL 51	476.927			JK 68	475.925		
GH 51	476.818			HJ 69	475.580		
HJ 52	476.837			KL 69	476.095		
GH 54	476.743			JK 71	475.651		
HJ 54	476.821			KL 72	475.842		
JK 54	476.863						
KL 55	476.908						
GH 57	476.565						
HJ 57	476.711						

NOTE:
For notes concerning the use of this table, see Sheet No. 54.
* All slab check points are located midway between the two girders shown in the prefix, such as GH, and along the Section No. designated such as 42.
For Construction Notes and Typical Section see Sheet No. 54.

TABLE OF ELEVATIONS

GIRDER K'			
SECTION	X	Y	Z
℄ Susp. @ Pier 1	474.153		
℄ Susp. @ Pier 2	475.172		

CONSTRUCTION ELEVATIONS

BRIDGE OVER NORTH WESTERN PARKWAY AND 22ND STREET

SHEET 57 OF 63

COMMONWEALTH OF KENTUCKY
DEPARTMENT OF HIGHWAYS
FRANKFORT
COUNTY OF
JEFFERSON
I 64-CEDAR GROVE TERRACE TO 13TH STREET
LOUISVILLE — LEXINGTON
ROAD

STATION 146+90 PROJECT NO. I 64-2(34)1 SP56-273-11L

BRIDGE NUMBER | DRAWING NO. 17123 | INDEX

DESIGNED BY L.M.H. CHECKED BY DMB & L.J.C. DATE 8-29
DETAILED BY DATE
TRACED BY DATE
CHECKED BY DATE
REVISED DATE
REVISED DATE
REVISED DATE
REVISED DATE

GIESTZEIER NO. 125-3 ABERPROOF

FED. ROAD DIST.	STATE	FED. AID PRO. NO.	FISCAL YEAR	SHEET NO.	TOTAL SHEETS
7	KY.				

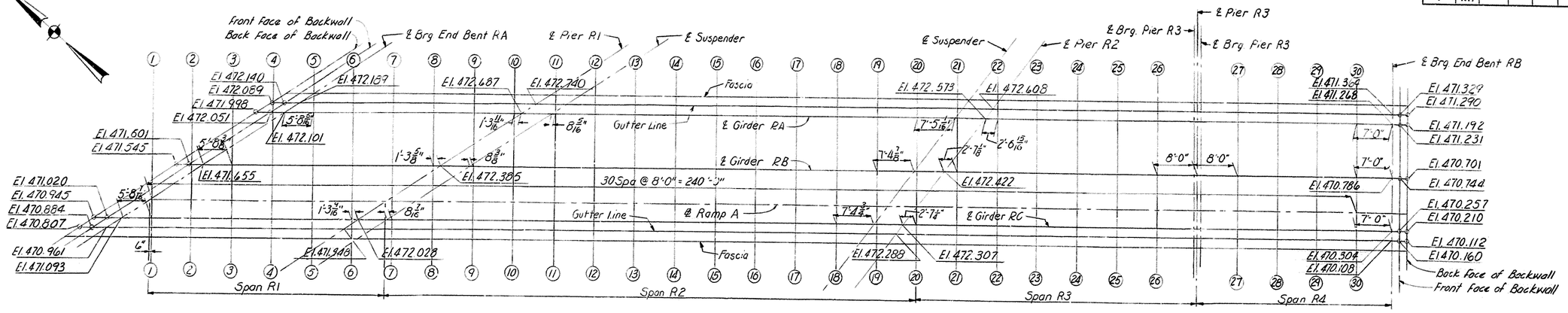

PLAN RAMP A

TABLE OF ELEVATIONS									
SECTION	GIRDER RA			GIRDER RB			GIRDER RC		
	X GUTTER	Y	Z	X	Y	Z	X GUTTER	Y	Z
1							471.197		
2							471.392		
3				471.764			471.569		
4				471.913			471.722		
5	472.234			472.051			471.856		
6	472.362			472.173			471.978		
7	472.474			472.277			472.006		
8	472.567			472.370			472.247		
9	472.649			472.459			472.378		
10	472.708			472.575			472.484		
11	472.767			472.670			472.566		
12	472.856			472.744			472.624		
13	472.922			472.794			472.657		
14	472.967			472.817			472.663		
15	472.983			472.816			472.642		
16	472.975			472.789			472.598		
17	472.939			472.738			472.528		
18	472.878			472.664			472.435		
19	472.800			472.568			472.323		
20	472.737			472.465			472.247		
21	472.653			472.399			472.163		
22	472.601			472.325			472.063		
23	472.537			472.239			471.948		
24	472.463			472.135			471.813		
25	472.373			472.011			471.654		
26	472.265			471.870			471.474		
℄ BRG. PIER R3	472.193			471.711			471.279		
27	472.016			471.556			471.093		
28	471.875			471.384			470.891		
29	471.715			471.194			470.670		
30	471.535			470.983			470.432		
℄ SUSP. @ PIER R1	472.782			472.448			472.038		
℄ SUSP. @ PIER R2	472.642			472.470			472.342		

TABLE OF ELEVATIONS FOR CONTROL OF SLAB THICKNESS							
SLAB* CHECK POINT	TOP OF SLAB ELEVATION	BOTTOM OF SLAB ELEVATION	COMP. SLAB T'NESS	SLAB CHECK POINT	TOP OF SLAB ELEVATION	BOTTOM OF SLAB ELEVATION	COMP. SLAB T'NESS
BC 3	471.683			BC 18	472.568		
AB 5	472.127			BC 21	472.300		
BC 5	471.970			AB 22	472.440		
AB 7	472.359			BC 23	472.117		
BC 8	472.319			AB 25	472.162		
AB 10	472.630			BC 25	471.862		
BC 10	472.547			AB 27	471.748		
AB 12	472.790			BC 27	471.362		
BC 12	472.695			AB 30	471.213		
AB 15	472.886			BC 30	470.753		
BC 15	472.743						
AB 18	472.753						

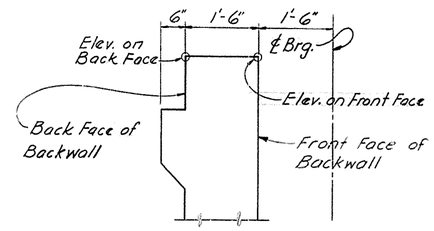

SECTION THRU BACKWALL

NOTE:
For notes concerning the use of this table, see Sheet No. 54.
* All slab check points are located midway between the two girders shown in the prefix, such as AB, and along the Section No. designated such as 15
For Construction Notes see Sheet No. 54.

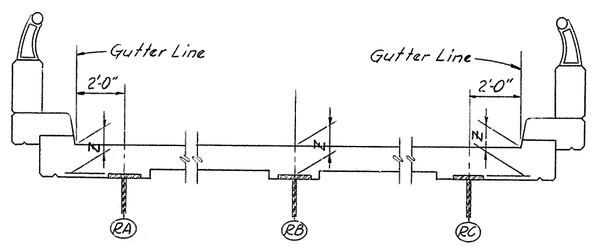

TYPICAL SECTION

CONSTRUCTION ELEVATIONS

BRIDGE OVER NORTH WESTERN PARKWAY AND 22ND STREET

SHEET 58 OF 63

COMMONWEALTH OF KENTUCKY
DEPARTMENT OF HIGHWAYS
FRANKFORT
COUNTY OF
JEFFERSON
I 64-CEDAR GROVE TERRACE TO 13TH STREET
LOUISVILLE-LEXINGTON ROAD
S.P. 56-273-11L

STATION 146+90 PROJECT NO. I 64-2(34)1

BRIDGE NUMBER | DRAWING NO. 17123 | INDEX

DESIGNED BY: JAL CHECKED BY: LJC
DETAILED BY: NJE CHECKED BY: DMR DATE 6-75
TRACED BY: CHECKED BY:
DATE REVISED DATE REVISED DATE REVISED

FED. ROAD DIST.	STATE	FED. AID PROJ. NO.	FISCAL YEAR	SHEET NO.	TOTAL SHEETS
7	KY.				

ESTIMATED TEST PILE LENGTH	
PIER 1W	35'
PIER 4W	40'

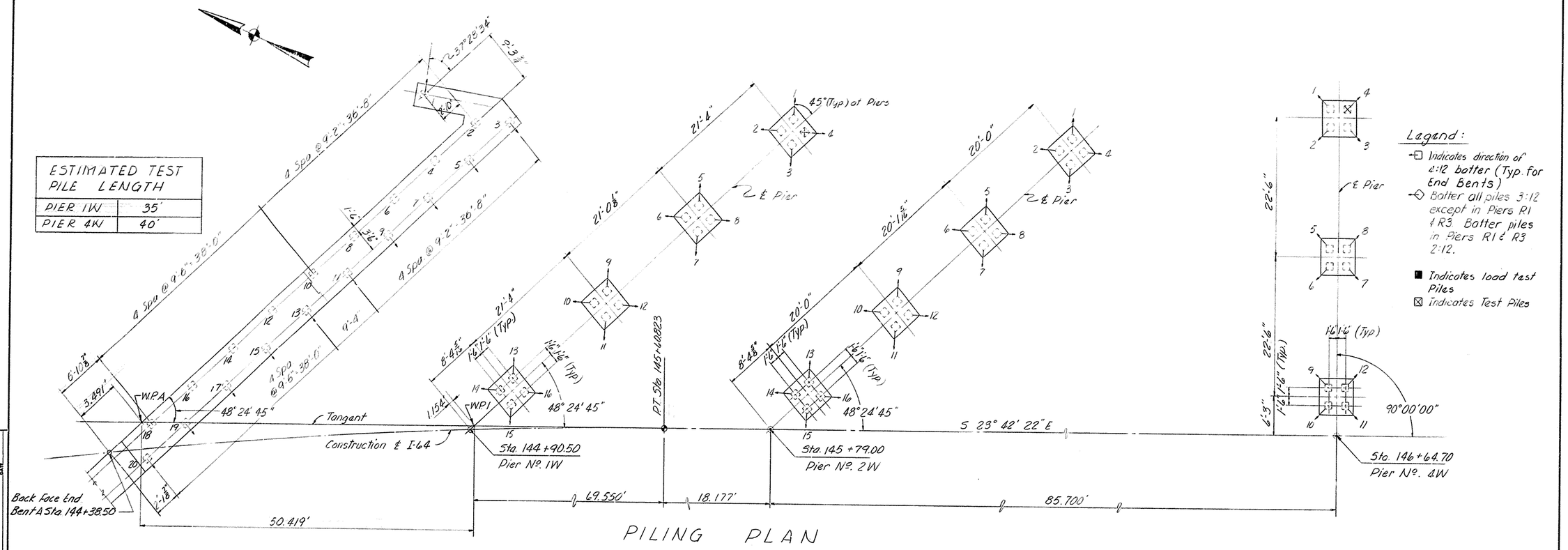

PILING PLAN

END BENT A				
Pile No.	Cut-off Elevation	Tip of Pile Elevation As Driven	Length of Pile in Place	Calculated Bearing Capacity Tons
1	464.662			
2				
3				
4				
5				
6				
7				
8				
9				
10				
11	464.662			
12	463.286			
13				
14				
15				
16				
17				
18				
19				
20	463.286			

PIER No. 1W				
Pile No.	Cut-off Elevation	Tip of Pile Elevation As Driven	Length of Pile in Place	Calculated Bearing Capacity Tons
1	449.044			
2				
3				
4				
5				
6				
7				
8				
9				
10				
11				
12				
13				
14				
15				
16	449.044			

PIER No. 2W				
Pile No.	Cut-off Elevation	Tip of Pile Elevation As Driven	Length of Pile in Place	Calculated Bearing Capacity Tons
1	450.120			
2				
3				
4				
5				
6				
7				
8	450.120			
9	450.119			
10				
11				
12				
13				
14				
15				
16	450.119			

PIER No. 4W				
Pile No.	Cut-off Elevation	Tip of Pile Elevation As Driven	Length of Pile in Place	Calculated Bearing Capacity Tons
1	453.779			
2				
3				
4				
5				
6				
7				
8				
9				
10				
11				
12	453.779			

Note:

This pile record does not replace other records of piles required to be kept and submitted by the Resident Engineer. After all piles have been driven, the Resident Engineer shall record tip of pile elevation as driven, the length of pile in place, and the calculated bearing capacity of each pile. He shall return one set of blueprints of the pile record sheet to the Director of Bridges, so that the data may be recorded on the original plans. Lengths of piles in place shown hereon are the actual lengths of piles in the finished structure below the cut-off elevation and are not necessary pay items.

Pile cut-off elevations for End Bents are for alternate A or E only. For Alternate B or C, add 2.0'

BRIDGE OVER NORTH WESTERN PARKWAY AND 22ND STREET

SHEET 59 OF 63

COMMONWEALTH OF KENTUCKY
DEPARTMENT OF HIGHWAYS
FRANKFORT
COUNTY OF
JEFFERSON
I64-CEDAR GROVE TERRACE TO 13TH STREET
LOUISVILLE-LEXINGTON ROAD
S.P. 56-273-11L
STATION 146+90
PROJECT NO. 164-2(34) I

BRIDGE NUMBER

DRAWING NO. 17123

INDEX

PILE RECORD

DESIGNED BY: DATE: REVISED:
DETAILED BY: RLE CHECKED BY: DATE: 8-66 REVISED:
TRACED BY: CHECKED BY: DATE: REVISED:

DIETZGEN NO. 196-2 ARCPROOF

FED. ROAD DIST.	STATE	FED. AID PROJ. NO.	FISCAL YEAR	SHEET NO.	TOTAL SHEETS
7	KY.				

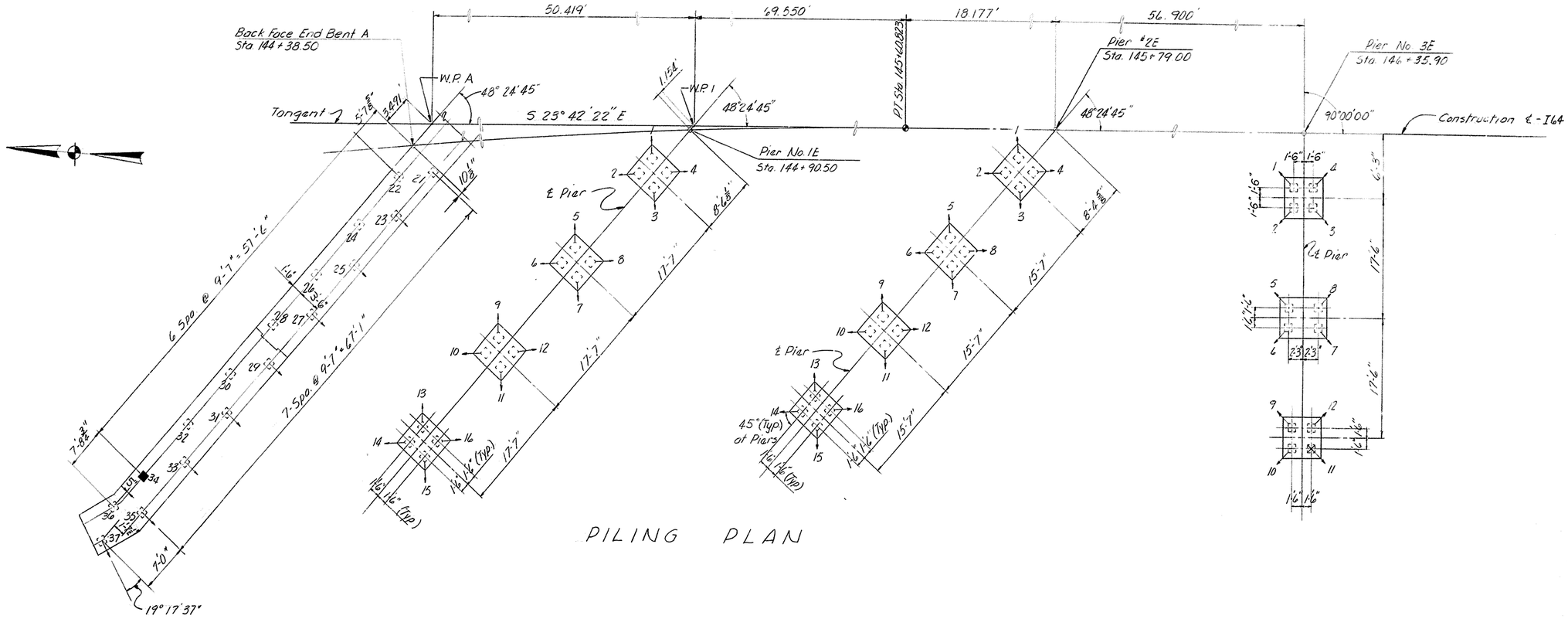

PILING PLAN

END BENT A				
Pile No.	Cut-off Elevation	Tip of Pile Elevation As Driven	Length of Pile in Place	Calculated Bearing Capacity-Tons
21	462.116			
22	↓			
23				
24				
25				
26				
27				
28	462.116			
29	460.578			
30	↓			
31				
32				
33				
34				
35				
36				
37	460.578			

PIER NO. 1E				
Pile No.	Cut-off Elevation	Tip of Pile Elevation As Driven	Length of Pile in Place	Calculated Bearing Capacity-Tons
1	447.990			
2	↓			
3				
4				
5				
6				
7				
8				
9				
10				
11				
12				
13				
14				
15	↓			
16	447.990			

PIER NO. 2E				
Pile No.	Cut-off Elevation	Tip of Pile Elevation As Driven	Length of Pile in Place	Calculated Bearing Capacity-Tons
1	448.975			
2	↓			
3				
4				
5				
6				
7				
8				
9				
10				
11				
12				
13				
14				
15	↓			
16	448.975			

PIER NO. 3E				
Pile No.	Cut-off Elevation	Tip of Pile Elevation As Driven	Length of Pile in Place	Calculated Bearing Capacity-Tons
1	454.159			
2	↓			
3				
4				
5				
6				
7				
8				
9				
10				
11	↓			
12	454.159			

ESTIMATED TEST PILE LENGTH	
END BENT A	46'
PIER 3E	40'

Note:
For Notes and Legend see Sheet 59.

PILE RECORD

BRIDGE OVER NORTH WESTERN PARKWAY AND 22ND STREET

SHEET 60 OF 63

COMMONWEALTH OF KENTUCKY
DEPARTMENT OF HIGHWAYS
FRANKFORT
COUNTY OF
JEFFERSON
I 64-CEDAR GROVE TERRACE TO 13TH STREET
LOUISVILLE-LEXINGTON ROAD
S.P. 56-273-IIL

STATION 146+90 **PROJECT NO.** 164-2(34) I

BRIDGE NUMBER

DRAWING NO. 17123

INDEX

DESIGNED BY N.J.F. CHECKED BY R. LIN DATE 7-66
DETAILED BY CHECKED BY DATE
TRACED BY CHECKED BY DATE
REVISED REVISED REVISED

FED. ROAD DIST.	STATE	FED. AID PROJ. NO.	FISCAL YEAR	SHEET NO.	TOTAL SHEETS
7	KY.				

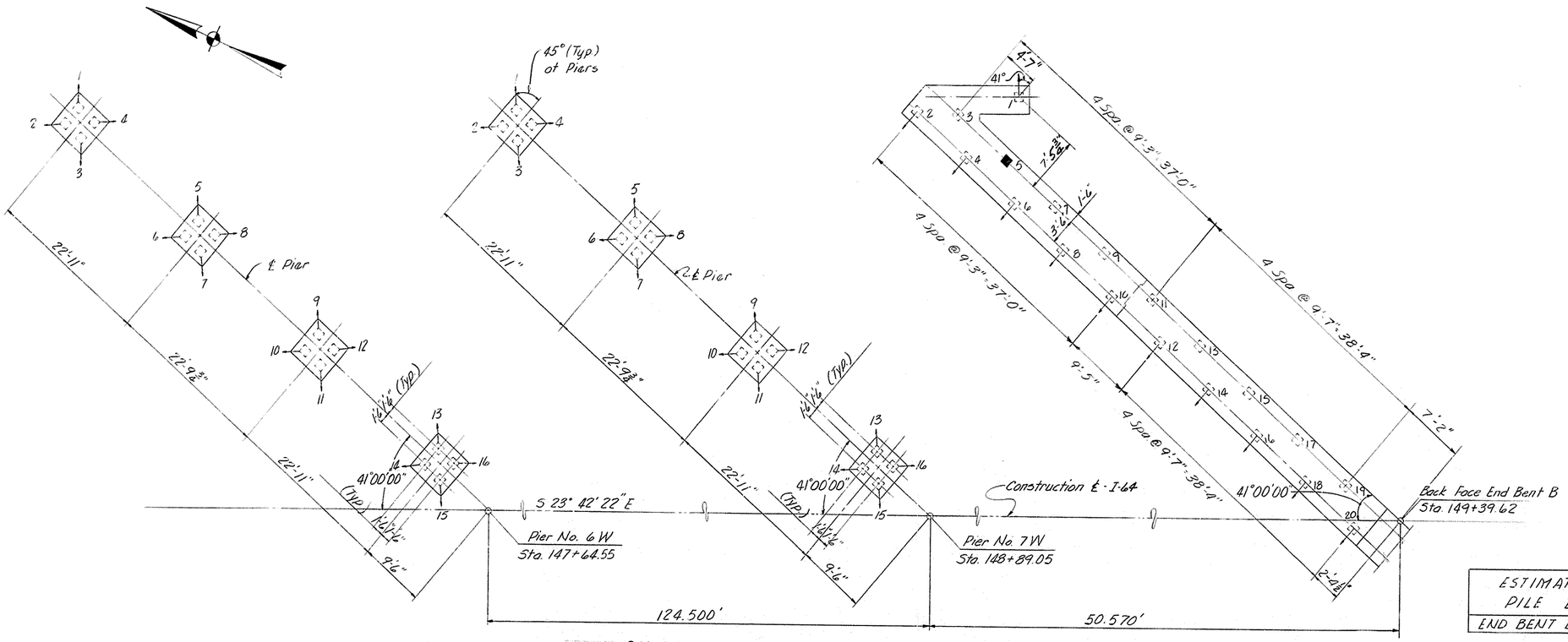

PILING PLAN

ESTIMATED TEST PILE LENGTH	
END BENT B	49'

PIER No. 6W				
Pile No.	Cut-off Elevation	Tip of Pile Elevation As Driven	Length of Pile in Place	Calculated Bearing Capacity-Tons
1	450.370			
2	↑			
3				
4				
5				
6				
7				
8				
9				
10				
11				
12				
13				
14				
15	↓			
16	450.370			

PIER No. 7W				
Pile No.	Cut-off Elevation	Tip of Pile Elevation As Driven	Length of Pile in Place	Calculated Bearing Capacity-Tons
1	450.500			
2	↑			
3				
4				
5				
6				
7				
8				
9				
10				
11				
12				
13				
14				
15	↓			
16	450.500			

END BENT B				
Pile No.	Cut-off Elevation	Tip of Pile Elevation As Driven	Length of Pile in Place	Calculate Bearing Capacity-Tons
1	463.753			
2	↑			
3				
4				
5				
6				
7				
8				
9				
10				
11				
12				
13				
14				
15				
16				
17				
18				
19				
20	463.753			

PILE RECORD

Note:
For Notes and Legend, see sht. 59.

BRIDGE OVER NORTH WESTERN PARKWAY AND 22ND STREET

SHEET 61 OF 63

COMMONWEALTH OF KENTUCKY
DEPARTMENT OF HIGHWAYS
FRANKFORT
COUNTY OF
JEFFERSON
164-CEDAR GROVE TERRACE TO 13TH STREET
LOUISVILLE-LEXINGTON ROAD
S.P. 56-273-IIL

STATION 146+90 PROJECT NO. 164-2(34)1

BRIDGE NUMBER — DRAWING NO. 17123 — INDEX

DESIGNED BY: ALE DATE: CHECKED BY: R. LIN DATE: 1-66 REVISED:
DETAILED BY: DATE: CHECKED BY: DATE: REVISED:
TRACED BY: DATE: REVISED:

FED. ROAD DIST.	STATE	FED. AID PRO. NO.	FISCAL YEAR	SHEET NO.	TOTAL SHEETS
7	KY.				

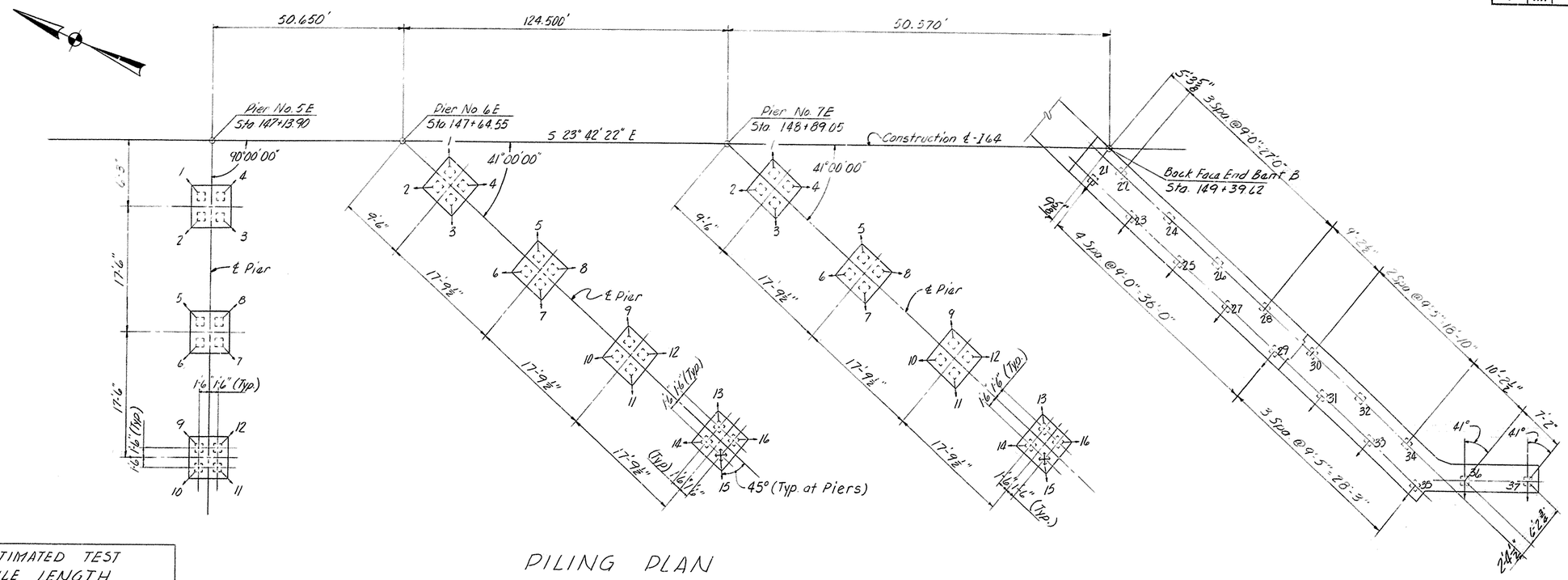

PILING PLAN

ESTIMATED TEST PILE LENGTH	
PIER 6E	38'
PIER 7E	37'

PIER No. 5E

Pile No.	Cut-off Elevation	Tip of Pile Elevation As Driven	Length of Pile in Place	Calculated Bearing Capacity-Tons
1	454.057			
2	↑			
3				
4				
5				
6				
7				
8				
9				
10				
11	↓			
12	454.057			

PIER No. 6E

Pile No.	Cut-off Elevation	Tip of Pile Elevation As Driven	Length of Pile in Place	Calculated Bearing Capacity-Tons
1	451.987			
2	↑			
3				
4				
5				
6				
7				
8				
9				
10				
11				
12				
13				
14				
15	↓			
16	451.987			

PIER No. 7E

Pile No.	Cut-off Elevation	Tip of Pile Elevation As Driven	Length of Pile in Place	Calculated Bearing Capacity-Tons
1	451.182			
2	↑			
3				
4				
5				
6				
7				
8				
9				
10				
11				
12				
13				
14				
15	↓			
16	451.182			

END BENT B

Pile No.	Cut-off Elevation	Tip of Pile Elevation As Driven	Length of Pile in Place	Calculated Bearing Capacity-Tons
21	463.753			
22	↑			
23				
24				
25				
26				
27				
28				
29				
30				
31				
32				
33				
34				
35				
36	↓			
37	463.753			

Note:

For Notes and Legend, see Sheet 59.

PILE RECORD

BRIDGE OVER NORTH WESTERN PARKWAY AND 22ND STREET

SHEET 62 OF 63

COMMONWEALTH OF KENTUCKY
DEPARTMENT OF HIGHWAYS
FRANKFORT
COUNTY OF
JEFFERSON
I 64-CEDAR GROVE TERRACE TO 13TH STREET
LOUISVILLE-LEXINGTON
ROAD

S.P. 56-273-11L

STATION 146+90 PROJECT NO. 164-2(34)1

BRIDGE NUMBER | DRAWING NO. 17123 | INDEX

DESIGNED BY ... CHECKED BY ... DATE ...
DETAILED BY R. LIN CHECKED BY ... DATE 8-66
TRACED BY ... CHECKED BY ... DATE ...
REVISED ... REVISED ... REVISED ...

FED. ROAD DIST.	STATE	FED. AID PROJ. NO.	FISCAL YEAR	SHEET NO.	TOTAL SHEETS
7	KY.				

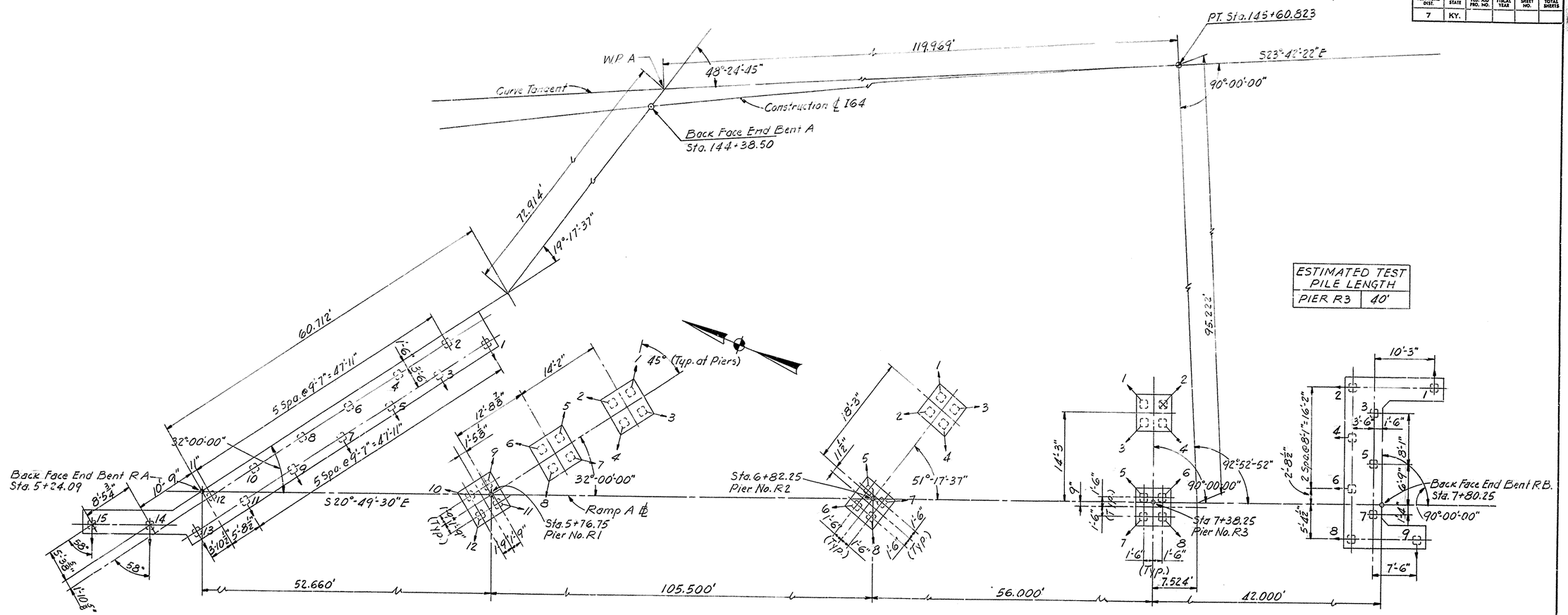

ESTIMATED TEST PILE LENGTH	
PIER R3	40'

END BENT RA				
Pile No.	Cut-off Elevation	Tip of Pile Elevation as driven	Length of Pile in Place	Calculated Bearing Capacity Tons
1	460.578			
2	↑			
3				
4				
5				
6				
7				
8				
9				
10				
11				
12				
13				
14	↓			
15	460.578			

PIER NO. R1				
Pile No.	Cut-off Elevation	Tip of Pile Elevation as driven	Length of Pile in Place	Calculated Bearing Capacity Tons
1	447.528			
2	↑			
3				
4				
5				
6				
7				
8				
9				
10				
11	↓			
12	447.528			

PIER NO. R2				
Pile No.	Cut-off Elevation	Tip of Pile Elevation as driven	Length of Pile in Place	Calculated Bearing Capacity Tons
1	449.266			
2	↑			
3				
4				
5				
6				
7	↓			
8	449.266			

PIER NO. R3				
Pile No.	Cut-off Elevation	Tip of Pile Elevation as driven	Length of Pile in Place	Calculated Bearing Capacity Tons
1	454.500			
2	↑			
3				
4				
5				
6				
7	↓			
8	454.500			

END BENT RB				
Pile No.	Cut-off Elevation	Tip of Pile Elevation as driven	Length of Pile in Place	Calculated Bearing Capacity Tons
1	459.789			
2	↑			
3				
4				
5				
6				
7				
8	↓			
9	459.789			

NOTE:
For Notes and Legend see Sht. No. 59.

BRIDGE OVER NORTH WESTERN PARKWAY AND 22ND STREET

SHEET 63 OF 63

COMMONWEALTH OF KENTUCKY
DEPARTMENT OF HIGHWAYS
FRANKFORT
COUNTY OF
JEFFERSON
I64-CEDAR GROVE TERRACE TO 13TH. STREET
LOUISVILLE-LEXINGTON
ROAD
S.P. 56-273-11L
STATION 146+90 PROJECT NO. I64-2(34)1

BRIDGE NUMBER | DRAWING NO. 17123 | INDEX

PILE RECORD

DESIGNED BY L.M.H. CHECKED BY T.I.G. DATE 8-66
DETAILED BY R.E.L. CHECKED BY DATE
TRACED BY CHECKED BY DATE
REVISED DATE REVISED DATE REVISED DATE

GENERAL NOTES

SPECIFICATIONS:

Kentucky Department of Highways 1965 Standard Specifications for Road and Bridge Construction, current edition, with Revisions, Special Provisions and Special Notes shall apply for this project.

MATERIAL:

Structural Carbon Steel----------ASTM-A36

Pins----------ASTM A108 Gr. 1016/1030 with a minimum Rockwell Scale B hardness of 8D

Lead----------ASTM-B29

H. S. Bolts, Nuts and Washers----------ASTM-A325

Machine Bolts----------ASTM-A307, Gr. A

Shear Connectors----------ASTM-A108 Gr. 1015

PUNCHING AND REAMING:

Holes marked "RA" for girder web and flange field splices shall be sub-punched or sub-drilled 11/16 ø and reamed to 15/16 ø while assembled in the shop in the cambered position. Girders shall remain assembled for inspection by the Kentucky Department of Highways Inspector and shall be match-marked while assembled.

All other holes may be punched full size, except holes in material thicker than 3/4" shall be drilled.

EDGE PLANING:

Sheared edges of plates of main material more than 5/8" thick shall be planed to a depth of 1/4".

FLAME CUTTING:

Steel may be flame cut, provided a smooth surface is secured by the use of a mechanical guide. Flame cutting by hand shall be done only where approved by the Engineer and the surface shall be made smooth by planing, grinding or chipping of the flame cut surface.

Flame cut surfaces shall meet the American Standards Association surface roughness rating value of 800.

RE-ENTRANT CUTS:

Re-entrants shall be filleted to a radius of not less than 3/4".

WELDING:

All welding, welders, welding materials and welding procedures shall comply with the American Welding Society Specifications for Welded Highway and Railway Bridges, 1966 edition, with modifications and additions listed on the Kentucky Department of Highways Standard Drawing A. W. S. 2A and the Nashville Bridge Company approved welding procedures.

All fillet welds shall be optional manual type M217 or submerged arc type S217 unless noted. Flange to web welds shall be submerged arc type S217.

EXTENSION BARS:

Groove welds shall be terminated at the ends of a joint in a manner that will insure sound welds by the use of extension bars as shown in detail "A" on this drawing.

PREHEAT AND INTERPASS TEMPERATURES:

Preheat and interpass temperatures shall be in accordance with Table 2, Page 41 of A.W.S. D2.0-66, except as modified on the Kentucky Department of Highways Standard drawing A.W.S. 2A, (Nashville Bridge Company Welding Procedure Sheet SP3).

RADIOGRAPHIC INSPECTION:

At the expense of the Kentucky Department of Highways, the following radiographic inspection is required:

1. 100% of all tension flange butt welds in girders.
2. 25% of all compression butt welds and web butt welds in girders but not less than 100% of any one splice.

If unacceptable defects are found in more than 10% of the radiographs of the compression flange butt welds, the remaining 75% of these welds shall be radiographed.

MAGNETIC PARTICLE INSPECTION:

At the expense of the Kentucky Highway Department, the following magnetic particle inspection in required:

1. At least five feet of every ten foot length of weld and five feet of each weld less than ten feet in length of each size of web to flange fillet welds in girders and fillet welds in bearing stiffeners shall be tested by the dry powder magnetic particle inspection method in accordance with ASTM designation E109.

The tests shall be located at random in the members so as to be typical for each size of weld.

If unacceptable defects are found in any test length of weld, the full length of the weld shall be magnetic particle tested.

Welds requiring repairs shall be retested after the repairs are made.

CLEANING:

After fabrication and immediately prior to painting, all exposed surfaces of structural steel, except pins and pin bearing surfaces shall be cleaned free of oil, dirt, rust, burrs and mill scale in accordance with the Steel Structures Painting Council Preparation Specification SSPC-SP-6-63 for Commercial Blast Cleaning.

Weld spatter shall be cleaned from assemblies in accordance with A.W.S. -413 (a) before painting.

SHOP PAINT:

Unless otherwise noted, all structural steel shall be given one brush or spray coat of shop primer paint to meet the requirements of Federal Specifications TT-P-615d for Type II and with Special Provision No. 80 of Kentucky Highway Department.

Surfaces within 3 inches of field holes shall not be painted except for holes in base plates.

Surfaces in contact with concrete (as noted on detail drawings) shall not be painted.

No paint shall be applied until it has been approved by the Testing Laboratory of the Kentucky Department of Highways.

The dry film thickness of the shop coat paint shall be uniform and not less than 1.5 mils as measured with a calibrated magnetic thickness gage.

Paint shall be applied only when the air temperature is 40° F. or higher. It shall not be applied upon damp surfaces or upon metal containing frost, nor shall it be applied when the air is misty or when the metal is hot enough to cause the paint to blister and produce a porous paint film.

Pins and pin bearing surfaces shall be coated with a hot mixture of white lead and tallow.

MARKING:

Members weighing more than 3 tons shall have the weights marked thereon.

INSPECTION:

By the Kentucky Department of Highways or their Authorized Agent.

Notarized mill test Reports or triplicate shall be furnished showing that all materials conform to the Specifications.

FIELD CONNECTIONS:

1. 7/8" ø high strength bolts with one hardened washer under the turned element, unless noted.
2. 7/8" ø threaded rods for roadway expansion devices.

All high strength bolts are friction type. Use turn-of-nut method for tightening.

ERECTION:

By others. Erect all members with mark on top side and on end as shown on erection drawings.

FIELD PLANT:

By Others.

DWG# 17123

1

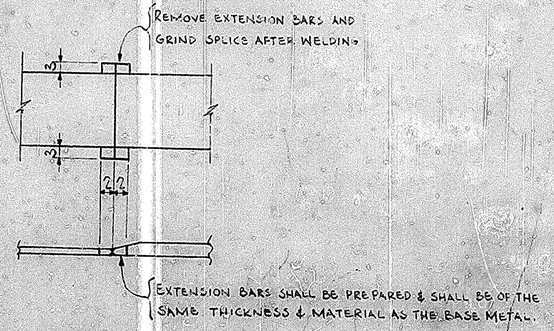

DETAIL A
TYPICAL FOR ALL FLANGE & WEB BUTT WELDS

STA. 146+90
DRAWING 17123
LETTING DATE - MAY 29, 1969

GENERAL NOTES
BRIDGE OVER NORTHWESTERN PKWY. & 22ND. ST.
DEPT. OF HWYS. - COMMONWEALTH OF KENTUCKY
JEFFERSON CO. - FAP I 64-2(13)2-SP16-8273-2651
CONTRACTOR: MATTINGLY BRIDGE CO.

NASHVILLE BRIDGE COMPANY
NASHVILLE, TENN.
BESSEMER PLANT

APPROVED FOR SHOP
CHIEF DRAFTSMAN
CHIEF ENGINEER
APPR. 6/4/70

RIVETS — OR NOTED
BOLTS — OR NOTED
FIELD CONN.
SHOP PAINT
FIELD
BILLS MATERIAL NO.

DRAWN BY BF DATE 1-15-70
TRACED BY DATE
CHECKED BY NMF DATE 1-15-70
DATE PRINTED

CONT. 0.118.8
S.A. BETHANY

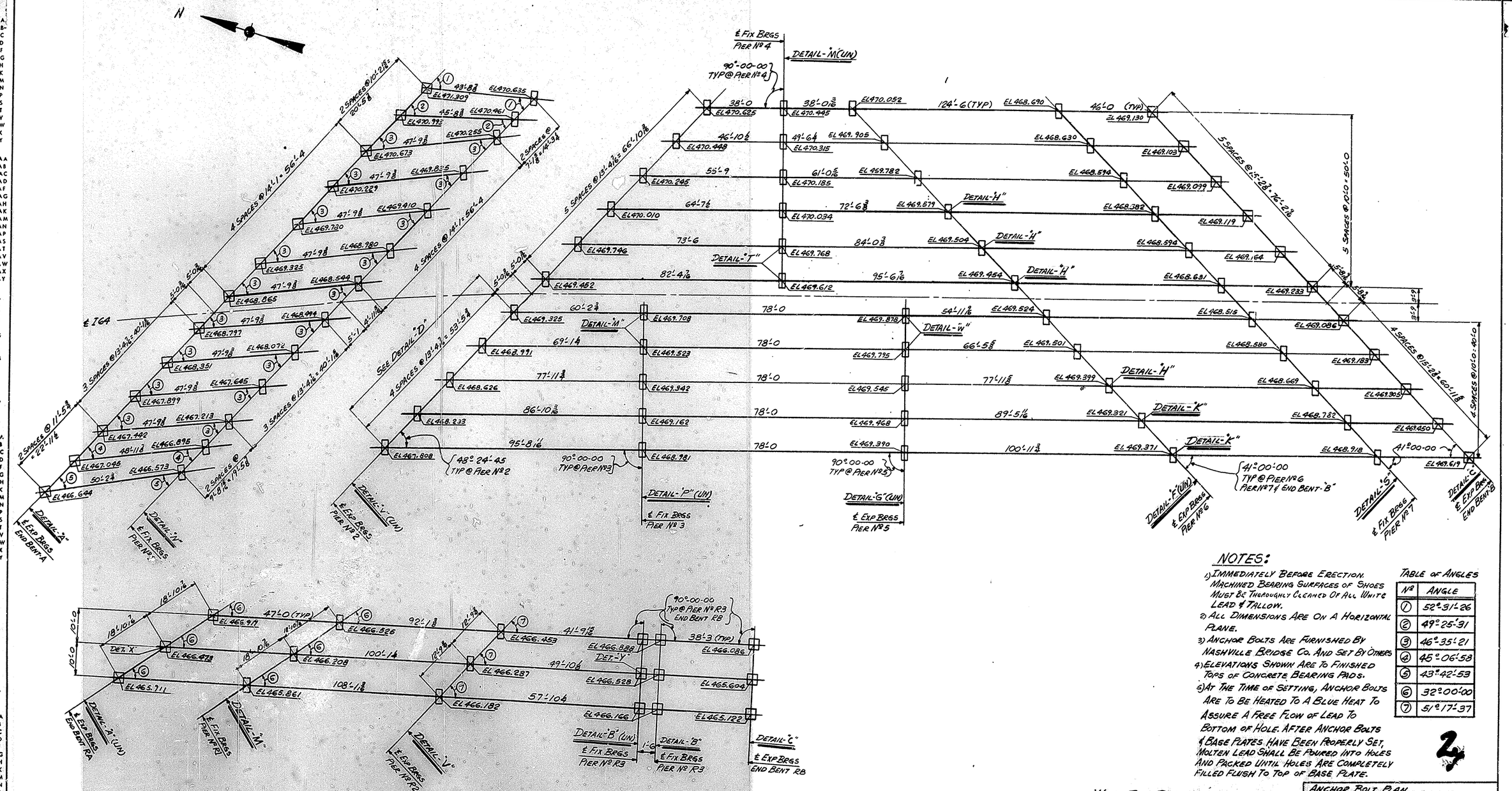

NOTES:

1) IMMEDIATELY BEFORE ERECTION, MACHINED BEARING SURFACES OF SHOES MUST BE THOROUGHLY CLEANED OF ALL WHITE LEAD & TALLOW.
2) ALL DIMENSIONS ARE ON A HORIZONTAL PLANE.
3) ANCHOR BOLTS ARE FURNISHED BY NASHVILLE BRIDGE CO. AND SET BY OTHERS
4) ELEVATIONS SHOWN ARE TO FINISHED TOPS OF CONCRETE BEARING PADS.
5) AT THE TIME OF SETTING, ANCHOR BOLTS ARE TO BE HEATED TO A BLUE HEAT TO ASSURE A FREE FLOW OF LEAD TO BOTTOM OF HOLE. AFTER ANCHOR BOLTS & BASE PLATES HAVE BEEN PROPERLY SET, MOLTEN LEAD SHALL BE POURED INTO HOLES AND PACKED UNTIL HOLES ARE COMPLETELY FILLED FLUSH TO TOP OF BASE PLATE.

TABLE OF ANGLES

Nº	ANGLE
1	52°-31'-26
2	49°-25'-31
3	46°-35'-21
4	45°-06'-53
5	43°-42'-53
6	32°-00'-00
7	51°-17'-37

2

WORK THIS DWG. WITH DWG. E2

STA. 146+90
DRAWING 17123
LETTING DATE - MAY 29, 1969

NOTICE TO ERECTOR

The dimensions on this plan must be strictly adhered to in all masonry concrete and building construction, or the steelwork will not fit. Report any misfit, error or misunderstanding of requirements immediately to Nashville Bridge Company. Backcharges for corrective work or replaced materials will not be accepted unless expressly authorized by Nashville Bridge Company before any such costs are incurred.

APPROVED FOR SHOP

WMF	1/2/70	CHIEF DRAFTSMAN
HK	1/2/70	CHIEF ENGINEER

REVISION NOTES
APPROVAL 1/2/70

ANCHOR BOLT PLAN
BRIDGE OVER NORTHWESTERN PKWY & 22ND ST.
DEPT. OF HIGHWAYS - COMMONWEALTH OF KENTUCKY
JEFFERSON CO. FAP I-64-2(73)2; SP56-8273-7181
CONTRACTOR: MATTINGLY BRIDGE CO.

NASHVILLE BRIDGE COMPANY
NASHVILLE, TENN.
[redacted] BESSEMER PLANT

RIVETS NONE
HOLES NONE
FIELD CONN. } SEE SHT
SHOP PAINT } FOR GEN.
FIELD } NOTES
DRAWN BY RK DATE 10-15-69
M. CHARLE - GATT (TRAVSOR)
CHECKED BY VM DATE 11/24/69
DATE PRINTED [redacted]
BILLS MATERIAL NO. CONT. C6736
S. O.
DRAWING NO. E1

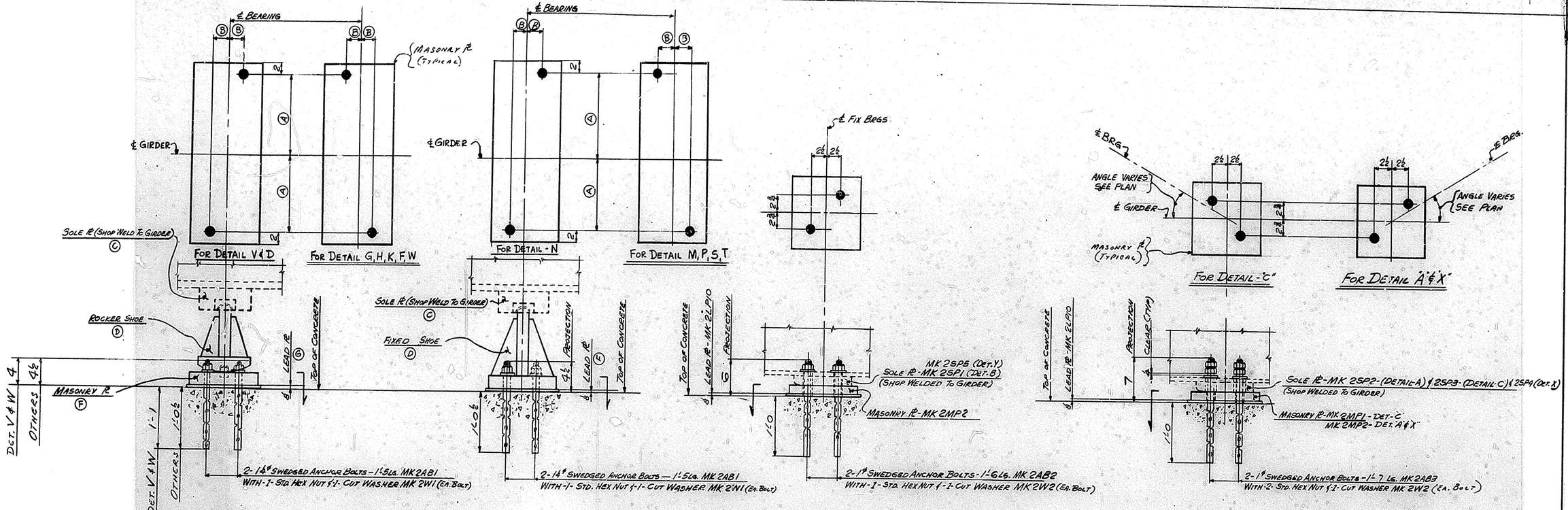

DETAIL	Ⓐ	Ⓑ	Ⓒ	Ⓓ	Ⓕ	Ⓖ
V	1'-1	1½	1SP1	1RS1	1MP1	2LP1
D	1'-1	2	1SP2	1RS2	1MP2	2LP2
F	1'-1	2½	1SP2	1RS3	1MP3	2LP3
G	1'-1	2½	1SP3	1RS4	1MP3	2LP3
H	1'-1	3	1SP4	1RS5	1MP4	2LP4
K	1'-1	3½	1SP4	1RS6	1MP5	2LP5
W	1'-1	1½	1SP1	1RS1	1MP6	2LP1

DETAIL	Ⓐ	Ⓑ	Ⓒ	Ⓓ	Ⓕ
N	8½	2	1SP1	1FS1	2LP6
P	10	2	1SP5	1FS2	2LP7
S	9	3	1SP2	1FS3	2LP8
T	10	2½	1SP3	1FS4	2LP9
M	8½	2	1SP1	1FS5	2LP6

WORK THIS DWG. WITH DWG. E1

3

NOTICE TO ERECTOR

The dimensions on this plan must be strictly adhered to in all masonry, concrete and building construction or the steelwork will not fit. Report any shop error or misunderstanding of requirements immediately to Nashville Bridge Company. Backcharges for corrective work or replaced materials will not be accepted unless expressly authorized by Nashville Bridge Company before any such costs are incurred.

APPROVED FOR SHOP
MMB 1/16/70 — CHIEF DRAFTSMAN
JWK 1/16/70 — CHIEF ENGINEER

REVISION NOTES
APPROVAL 1/2/70

ANCHOR BOLT PLAN
BRIDGE OVER NORTHWESTERN PKWY & 22ND ST.
DEPT. OF HIGHWAYS - COMMONWEALTH OF KENTUCKY
JEFFERSON CO. FAP I-64-2(73)2; SP56-8273-2LB1
CONTRACTOR: MATTINGLY BRIDGE CO.

NASHVILLE BRIDGE COMPANY
NASHVILLE, TENN.
[redacted] BESSEMER PLANT

RIVETS: NONE
HOLES: NONE
FIELD CONN. } SEE GN
SHOP PAINT } FOR GEN.
FIELD } NOTES
DRAWN BY: FK DATE: 10-15-69
W. CHARLES SMITH (TENNESSEE)
CHECKED BY: VW DATE: 11/24/69
DATE PRINTED: [redacted]
BILLS MATERIAL NO.
CONT. C 6736
S. O.
DRAWING NO. E2

B. K. ELLIOTT CO., PGH., PA. REORDER A-4373

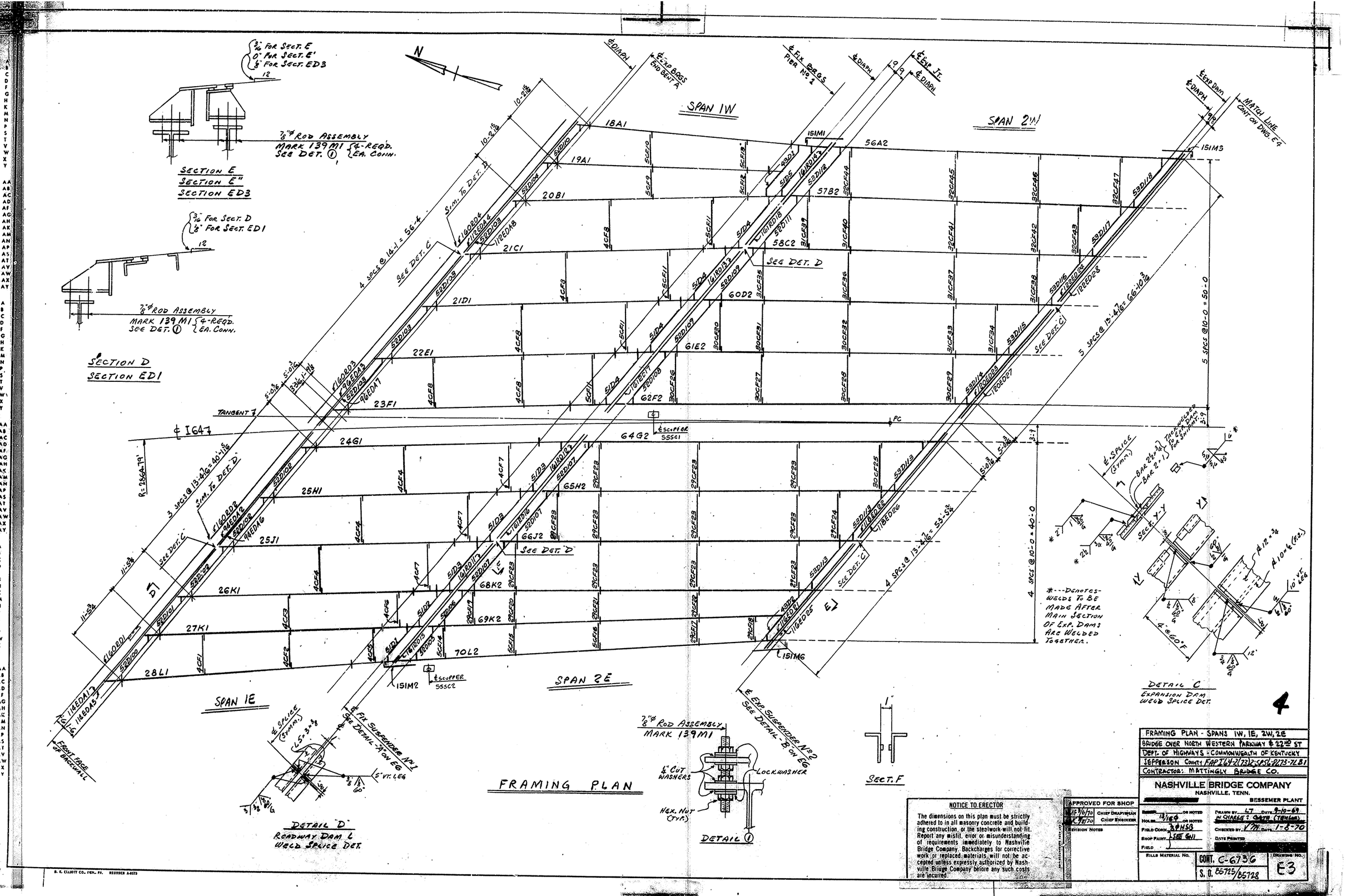
SPAN 1W
SPAN 2W
SPAN 1E
SPAN 2E
FRAMING PLAN
SECTION E
SECTION E"
SECTION ED3
SECTION D
SECTION ED1
7/8"ϕ ROD ASSEMBLY
MARK 139M1 {4-REQ'D. EA. CONN.
SEE DET. 1
SEE DET. C
SEE DET. D
SEE DET. C'
SEE DET. D'
SEE DET. E'
SEE DETAIL "A" ON E6
SEE DETAIL "B" ON E6
℄ EXP BRGS END BENT A
℄ FIX BRGS PIER No. 2
℄ EXP JT.
℄ DIAPH.
℄ EXP DAM
MATCH LINE CONT. ON DWG. E4
℄ I64
TANGENT
PC
℄ SCUPPER 555C1
℄ SCUPPER 555C2
℄ SCUPPER 555C3
℄ SPLICE (SYMM.)
℄ FIX SUSPENDER No. 1
℄ EXP SUSPENDER No. 2
FRONT FACE OF BACKWALL
R=2664.79'
4 SPCS @ 14'-1 = 56'-4
3 SPCS @ 13'-4 1/16 = 40'-1 5/16
4 SPCS @ 13'-4 1/16 = 53'-5 1/4
5 SPCS @ 13'-4 7/16 = 66'-10 3/4
5 SPCS @ 10'-0 = 50'-0
4 SPCS @ 10'-0 = 40'-0
SIM. TO DET. D
SIM. TO DET. D'
18A1
19A1
20B1
21C1
21D1
22E1
23F1
24G1
25H1
25J1
26K1
27K1
28L1
56A2
57B2
58C2
60D2
61E2
62F2
64G2
65H2
66J2
68K2
69K2
70L2
151M1
151M2
151M3
151M6
*---DENOTES WELDS TO BE MADE AFTER MAIN SECTION OF EXP. DAMS ARE WELDED TOGETHER.
DETAIL C
EXPANSION DAM WELD SPLICE DET.
DETAIL D
ROADWAY DAM L WELD SPLICE DET.
DETAIL 1
SECT. F
7/8"ϕ ROD ASSEMBLY
MARK 139M1
4" CUT WASHERS
LOCKWASHER
HEX. NUT (TYP.)
4
FRAMING PLAN - SPANS 1W, 1E, 2W, 2E
BRIDGE OVER NORTH WESTERN PARKWAY & 27TH ST
DEPT. OF HIGHWAYS - COMMONWEALTH OF KENTUCKY
JEFFERSON COUNTY FAP I64-2(73)2; SPSL-7173-71.81
CONTRACTOR: MATTINGLY BRIDGE CO.
NASHVILLE BRIDGE COMPANY
NASHVILLE, TENN.
BESSEMER PLANT
NOTICE TO ERECTOR
The dimensions on this plan must be strictly adhered to in all masonry concrete and building construction, or the steelwork will not fit. Report any misfit, error or misunderstanding of requirements immediately to Nashville Bridge Company. Backcharges for corrective work or replaced materials will not be accepted unless expressly authorized by Nashville Bridge Company before any such costs are incurred.
APPROVED FOR SHOP
CHIEF DRAFTSMAN
CHIEF ENGINEER
REVISION NOTES
DRAWN BY LT DATE 9-10-69
IN CHARGE: CATTS (TENTAT.)
CHECKED BY VM DATE 1-8-70
DATE PRINTED
BILLS MATERIAL NO.
CONT. C-6736
S.O. 85725/85728
DRAWING NO. E3

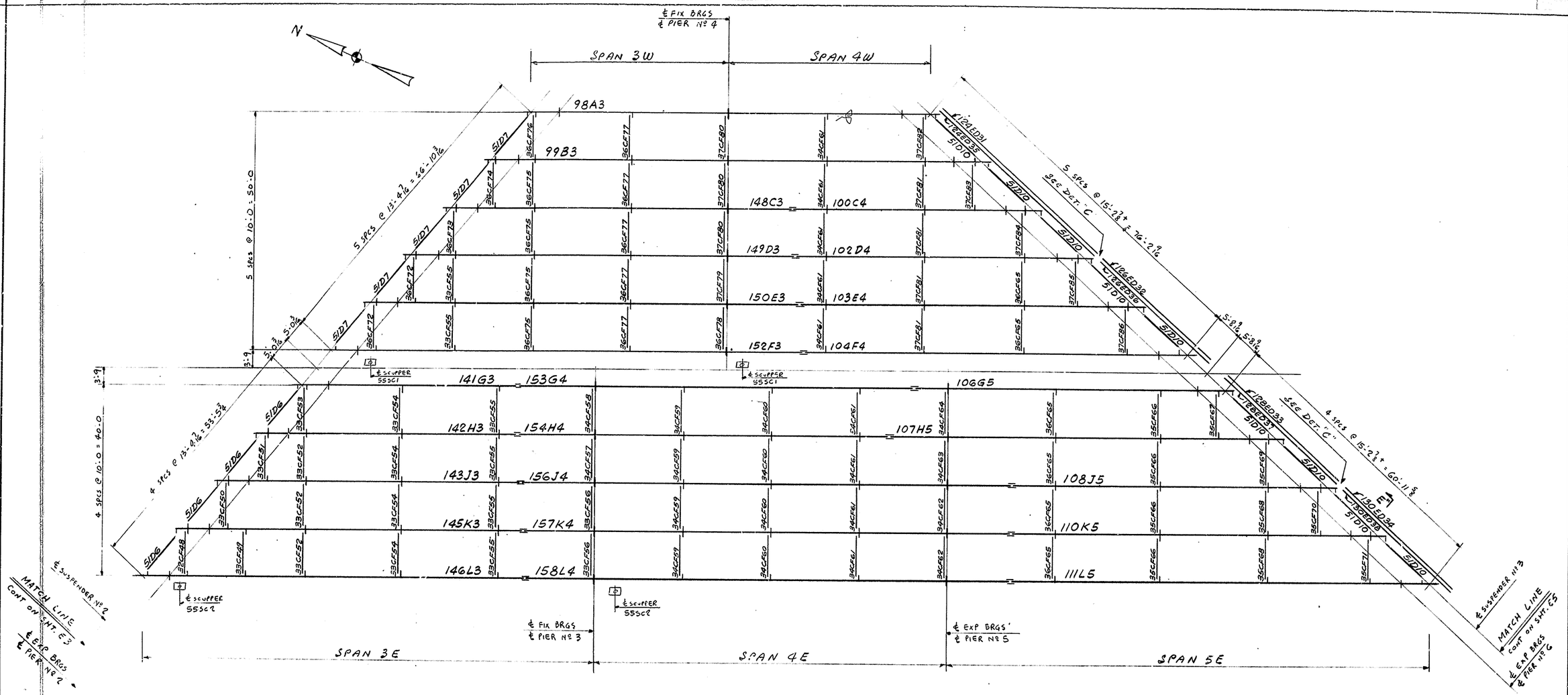

FRAMING PLAN

FOR DETAIL "C" & SECTION "E"
SEE DWG. No. E3

5

FRAMING PLAN - SPANS 3W, 3E, 4W, 4E, 5E
BRIDGE OVER NORTH WESTERN PARKWAY & 22ND ST
DEPT OF HIGHWAYS COMMONWEALTH OF KENTUCKY
JEFFERSON CTY - FAP-T-L4-2(73)2; SPSL-0273-2181
CONTRACTOR: MATTHEWS BRIDGE CO.

NOTICE TO ERECTOR

The dimensions on this plan must be strictly adhered to in all masonry concrete and building construction, or the steelwork will not fit. Report any misfit, error or misunderstanding of requirements immediately to Nashville Bridge Company. Backcharges for corrective work or replaced materials will not be accepted unless expressly authorized by Nashville Bridge Company before any such costs are incurred.

APPROVED FOR SHOP

WMF 3/6/70	CHIEF DRAFTSMAN
JEF 3/6/70	CHIEF ENGINEER

REVISION NOTES

NASHVILLE BRIDGE COMPANY
NASHVILLE, TENN.
BESSEMER PLANT

[redacted] OR NOTED	DRAWN BY LT DATE 9-11-69
HOLES 13/8 OR NOTED	IN CHARGE: GATTI (TENSOR)
FIELD CONN. 3/4 HSB	CHECKED BY VM DATE 1-8-70
SHOP PAINT TEG GMI	DATE PRINTED
FIELD "	[redacted]
BILLS MATERIAL NO.	CONT. C-6736
	S. O. B5725/B5728
	DRAWING NO. E4

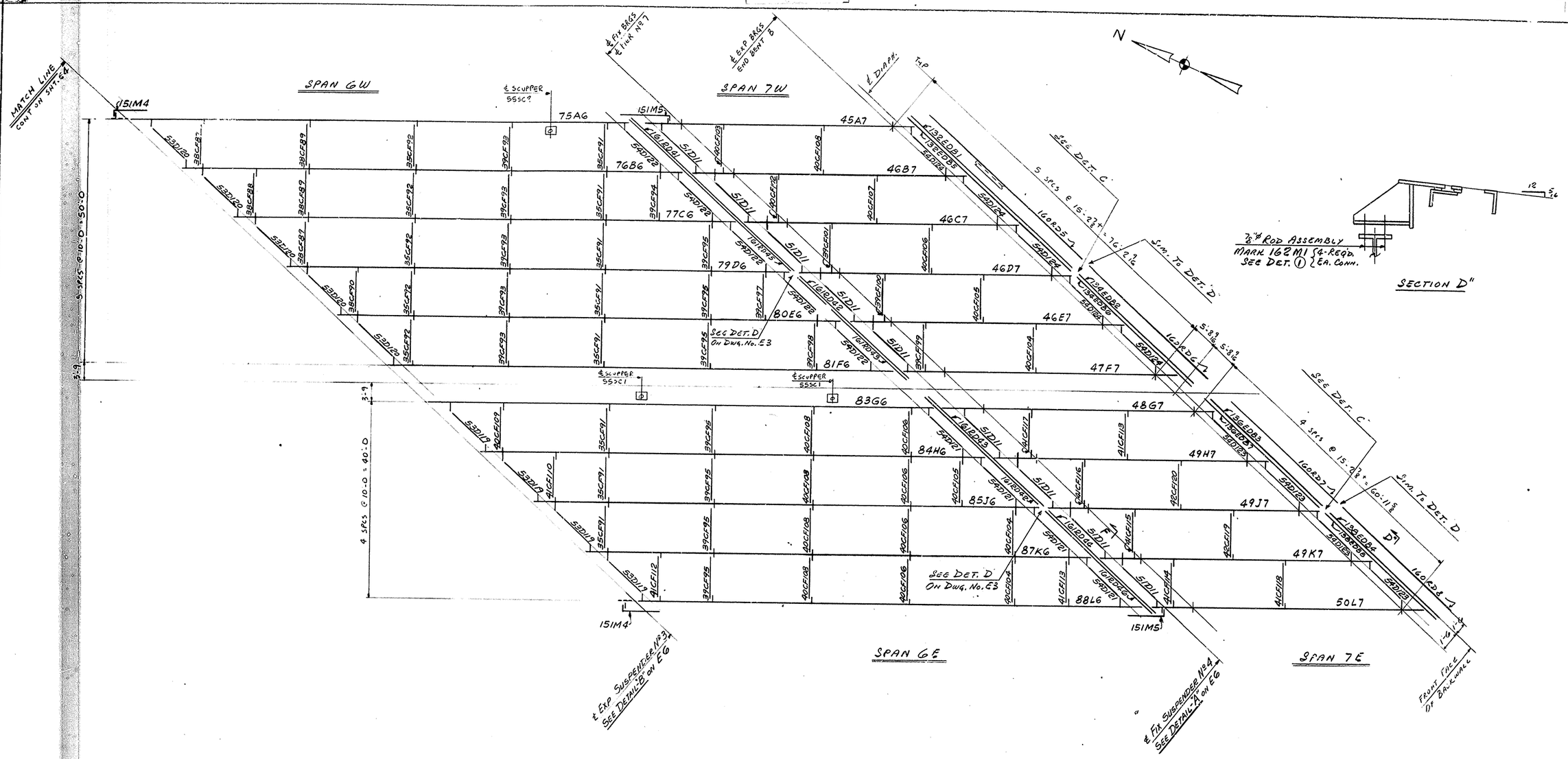

FRAMING PLAN

6

NOTICE TO ERECTOR

The dimensions on this plan must be strictly adhered to in all masonry concrete and building construction, or the steelwork will not fit. Report any misfit, error or misunderstanding of requirements immediately to Nashville Bridge Company. Backcharges for corrective work or replaced materials will not be accepted unless expressly authorized by Nashville Bridge Company before any such costs are incurred.

APPROVED FOR SHOP	
WMF 3/6/70	Chief Draftsman
[illegible] 3/6/70	Chief Engineer
Revision Notes	

FRAMING PLAN - SPANS 6W, 6E, 7W, 7E
BRIDGE OVER NORTH WESTERN PARKWAY & 22ND ST
DEPT. OF HIGHWAYS - COMMONWEALTH OF KENTUCKY
JEFFERSON CTY FAP I-64-2(73)7; S-956-(273-76.81)
CONTRACTOR: MATTINGLY BRIDGE CO.

NASHVILLE BRIDGE COMPANY
NASHVILLE, TENN.
BESSEMER PLANT

[redacted] OR NOTED	Drawn by LT Date 9-11-69
Holes 18 ø OR NOTED	In Charge: GATTI (TENSOR)
Field Conn. 3 ø HSB	Checked by VM Date 1-8-70
Shop Paint } SEE GN1	Date Printed
Field }	[redacted]
Bills Material No.	CONT. C-6736
	S. O. 65725/65728
	Drawing No. E5

B. E. ELLIOTT CO. REORDER A-8373

BRIDGE

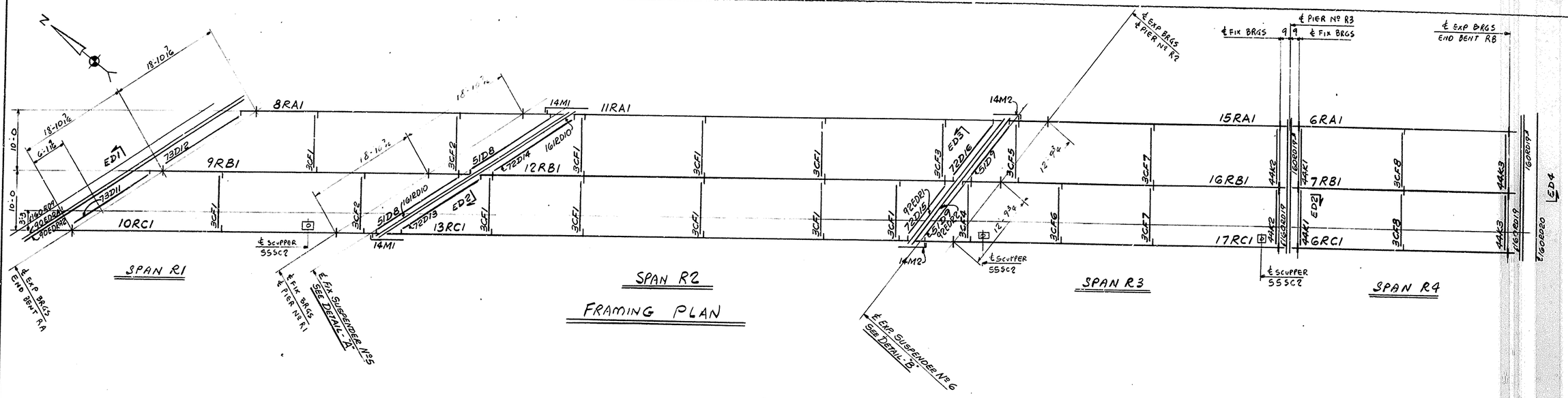

FRAMING PLAN

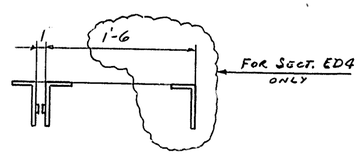

SECTION ED2
SECTION ED4

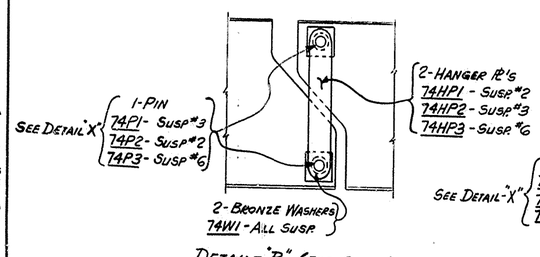

DETAIL - "B" (EXP. SUSP.)

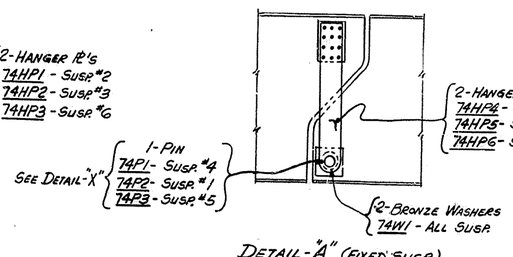

DETAIL - "A" (FIXED SUSP.)

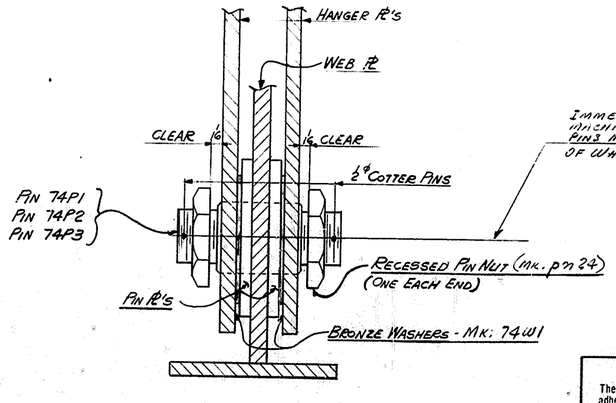

DETAIL - "X"

FOR SECTIONS ED1 & ED2
SEE DWG. No. E3

7

FRAMING PLAN - RAMP "A" - SPANS R1, R2, R3, R4
BRIDGE OVER NORTH WESTERN PARKWAY & 22ND ST
DEPT. OF HIGHWAYS - COMMONWEALTH OF KENTUCKY
JEFFERSON CTY - FAP I-64-2(73)2 (SPSG-8273-76B)
CONTRACTOR : MATTINGLY BRIDGE CO.

NASHVILLE BRIDGE COMPANY
NASHVILLE, TENN.
BESSEMER PLANT

Drawn by	CT	Date	4-11-69
In Charge	MATTI (TRUSS R)		
Checked by	VM	Date	1-8-70
Date Printed			

Holes: 13/16 ϕ or noted
Field Conn.: 3/4 ϕ HSB
Shop Paint: SEE GHI
Field:
Bills Material No.

CONT. C-6736
S. O. 35725/35728
Drawing No. E6

NOTICE TO ERECTOR

The dimensions on this plan must be strictly adhered to in all masonry concrete and building construction, or the steelwork will not fit. Report any misfit, error or misunderstanding of requirements immediately to Nashville Bridge Company. Backcharges for corrective work or replaced materials will not be accepted unless expressly authorized by Nashville Bridge Company before any such costs are incurred.

APPROVED FOR SHOP
WMF 1/6/70 Chief Draftsman
JAC 1/7/70 Chief Engineer
Revision Notes

B. E. ELLIOTT CO., PGH., PA. REORDER A-6573

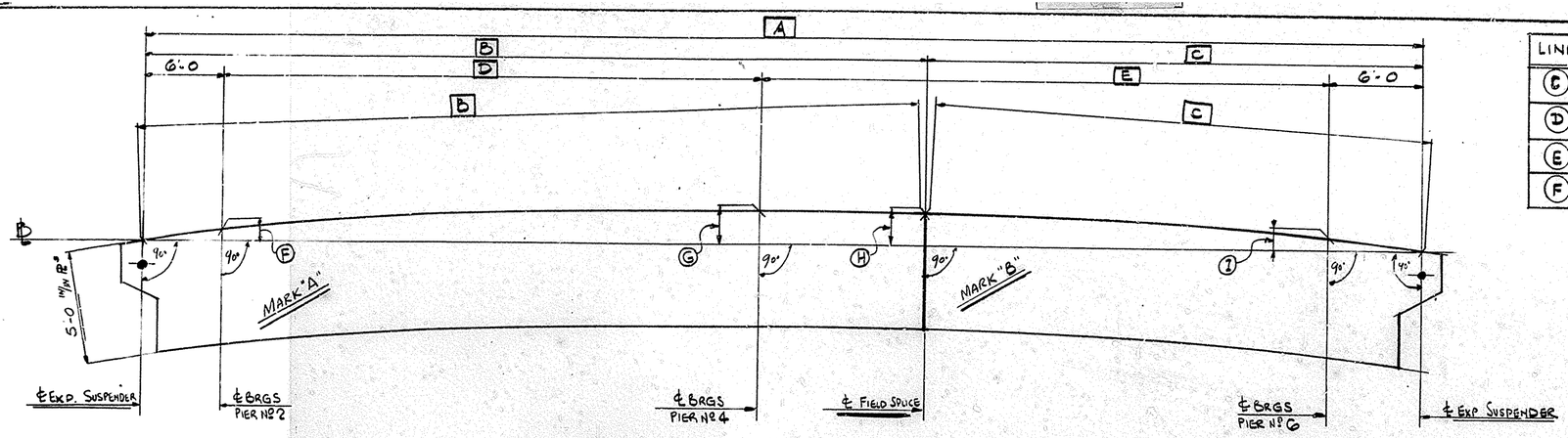

SHOP ASSEMBLY DIAGRAMS FOR LINES ©Ⓓ Ⓔ & Ⓕ

LINE	MK "A"	MK "B"	A	B	C	D	E	F	G	H	I
©	148C3	100C4	128-9 9/16	74'-3	54-6 5/16	55-9	61-0 5/16	1/4	1 7/16	1 1/2	3/16
Ⓓ	149D3	102D4	149-1 7/8	85-1 1/2	64-0 3/8	64'-7 1/2	72-6 3/8	5/16	2	2 1/8	5/16
Ⓔ	150E3	103E4	169-6 3/8	96'-6	73-0 3/8	73'-6	84-0 3/8	3/8	2 5/8	2 15/16	7/16
Ⓕ	152F3	104F4	189'-10 7/8	107-4 7/16	82-6 7/16	82-4 7/16	95-6 7/16	7/16	3 5/16	3 7/8	1/2

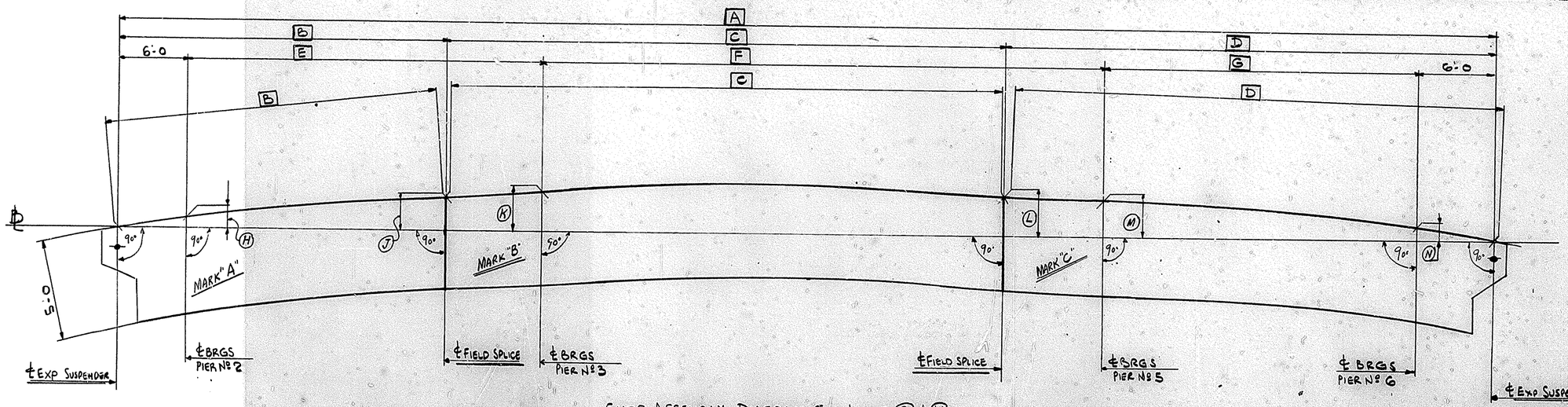

SHOP ASSEMBLY DIAGRAM FOR LINES Ⓖ & Ⓗ

LINE	MARK "A"	MARK "B"	MARK "C"	A	B	C	D	E	F	G	H	J	K	L	M	N
Ⓖ	141G3	153G4	106G5	205-2 9/16	47-8 3/4	88-0	69-5 9/16	60-2 3/4	78-0	54-11 9/16	7/16	2 3/4	3/4	3 9/16	3 1/16	5/16
Ⓗ	142H3	154H4	107H5	225-6 7/8	56-7 1/4	81'-6	87-5 5/8	69-1 1/4	78-0	66-5 5/8	9/16	3 3/4	4 1/16	4 9/16	4	7/16

8

SHOP ASSEMBLY DIAGRAMS
BRIDGE OVER NORTHWESTERN PKWY & 22ND STREET
DEPT OF HIGHWAYS - COMMONWEALTH OF KENTUCKY
JEFFERSON COUNTY - FAP I 64-2(732) & SP 56-273-7.77
CONTRACTOR: MATTINGLY BRIDGE CO.

NASHVILLE BRIDGE COMPANY
NASHVILLE, TENN.
BESSEMER PLANT

APPROVED FOR SHOP
HMF 7/9/70 Chief Draftsman
7/9/70 Chief Engineer
Revision Notes

Hole 15/16 or noted
Field Conn. 3 Ø H & B
Shop Paint } See Gen. Notes
Field

Drawn by W.J.G. Date 10/14/69
In Charge Contract Engr.
Checked by L.T. Date 10/24/69
Date Printed

Bills Material No.
CONT. C6736
S.O. B-5730
Drawing No. SA 1

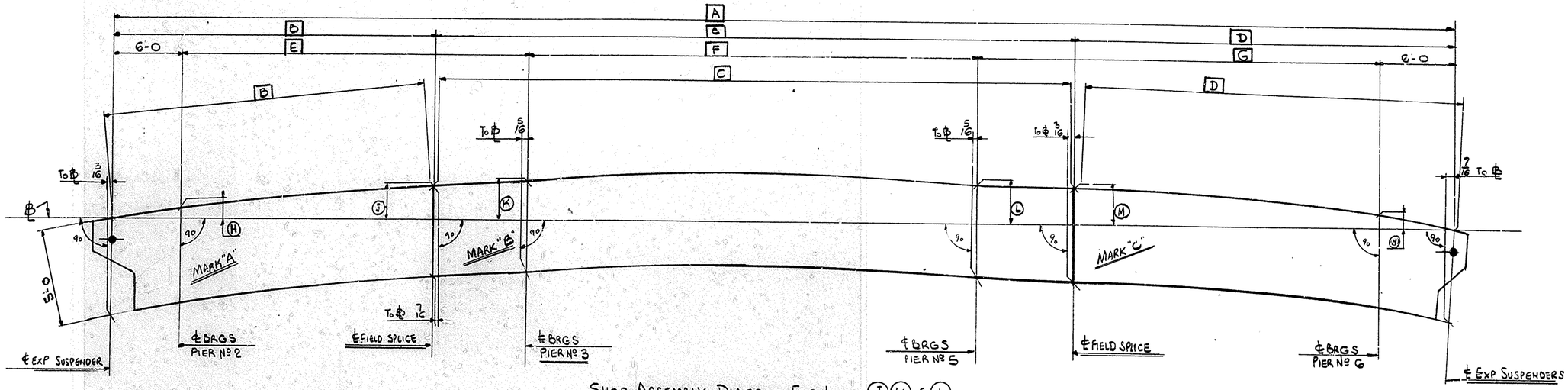

SHOP ASSEMBLY DIAGRAM FOR LINES (J)(K) & (L)

LINE	MARK "A"	MARK "B"	MARK "C"	A	B	C	D	E	F	G	H	J	K	L	M	N
(J)	143J3	156J4	108J5	245-11½	65-11⅞	113-11⅞	65-11¾	77-11 13/16	78-0	77-11 11/16	⅝	4¾	5	4 15/16	4⅝	½
(K)	145K3	157K4	110K5	266-4 1/16	75-10⅜	112-5⅞	77-11 13/16	86-10 5/16	78-0	89-5¾	¾	5 1/16	6	6	6 1/16	11/16
(L)	146L3	158L4	111L5	286-8 1/16	85-8 15/16	110-11⅞	89-11⅞	95-8⅞	78-0	100-11 13/16	13/16	7¼	7 1/16	7 3/16	7⅝	15/16

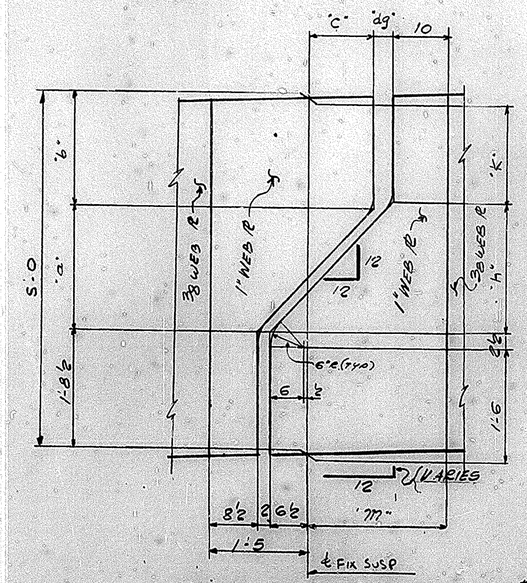

TABLE FOR SUSPENDERS 1 & 4 (SEE WG)

SUSP #	GIRD. #	"c"	"dg"	"a"	"b"	"h"	"k"	"m"
1	(A)	10	2⅝	1'-6½	1'-9	1'-7⅛	1'-8⅜	1'-10⅝
	(B)	10½	3⅜	1'-7	1'-8½	1'-8⅜	1'-7 5/16	1'-11⅛
	(C)		3¼			1'-8¼	1'-7¼	1'-11⅜
	(D)		3⅜			1'-8⅜	1'-7⅛	1'-11⅛
	(E)		3 7/16			1'-8 7/16	1'-7 1/16	1'-11 13/16
	(P) TO (K)		3½			1'-8½	1'-7	2'-0
	(K')		4⅛			1'-9⅛	1'-6⅜	2'-0⅝
1	(L)	10½	4⅜	1'-7	1'-8½	1'-9⅜	1'-5⅛	2'-1 5/16
4	(A) TO (L)	1'-0	3½	1'-8½	1'-7	1'-10	1'-5½	2'-1½

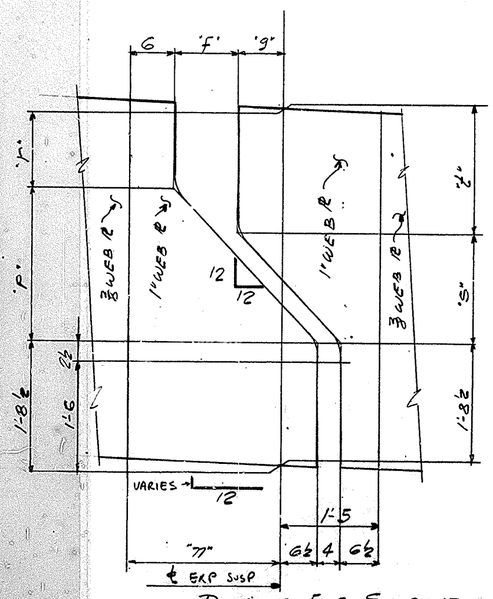

TABLE FOR SUSPENDERS 2 & 3 (SEE WG)

SUSP #	GIRD. #	"f"	"g"	"m"	"p"	"r"	"s"	"t"
2	(A) & (B)	9 13/16	7	1'-10 13/16	1'-11 5/16	1'-4 3/16	1'-5½	1'-10
	(C)	9⅞		1'-10⅞	1'-11⅜	1'-4⅛		
	(D)	10		1'-11	1'-11½	1'-4		
	(E)	10⅛		1'-11⅛	1'-11 9/16	1'-3 15/16		
	(P) TO (K)	10⅛		1'-11⅛	1'-11⅝	1'-3⅞		
2	(L)	10 13/16	7	1'-11 13/16	2'-0 5/16	1'-3 3/16	1'-5½	1'-10
3	(A) TO (L)	11½	8	2'-1½	2'-2	1'-1½	1'-6½	1'-9

DETAIL C FIXED SUSPENDERS #1 & #4

(SUSPENDER #1 AS SHOWN)
(SUSPENDER #4 OPP HAND TO SKETCH)

DETAIL C EXP. SUSPENDERS #2 & #3

(SUSPENDER # 2 AS SHOWN)
(SUSPENDER # 3 OPP HAND TO SKETCH)

9

SHOP ASSEMBLY DIAGRAM
BRIDGE OVER NORTHWESTERN PKWY & 22ND ST
DEPARTMENT OF HIGHWAYS · COMMONWEALTH OF KENTUCKY
JEFFERSON COUNTY - FAP-I-64-2(7332); S256-B273-7LPI
CONTRACTOR: MATTINGLY BRIDGE COMPANY

NASHVILLE BRIDGE COMPANY
NASHVILLE, TENN.
[redacted] BESSEMER PLANT

APPROVED FOR SHOP
WWF 7/8/70 CHIEF DRAFTSMAN
HRC 7/8/70 CHIEF ENGINEER
REVISION NOTES

SCALE	15/16 OR INCHES	DRAWN BY WJG	DATE 7/16/69
HOLES	15/16 OR NOTED	W CHORBEE / GATTI (TENTER)	
FIELD CONN.	7/8 HSB	CHECKED BY CT	DATE 10-22-69
SHOP PAINT	1 CE GRY	DATE PRINTED	
FIELD	1 NOTES	[redacted]	
BILLS MATERIAL NO.	CONT. C 6736 S.O. B-5730	DRAWING NO. SA2	

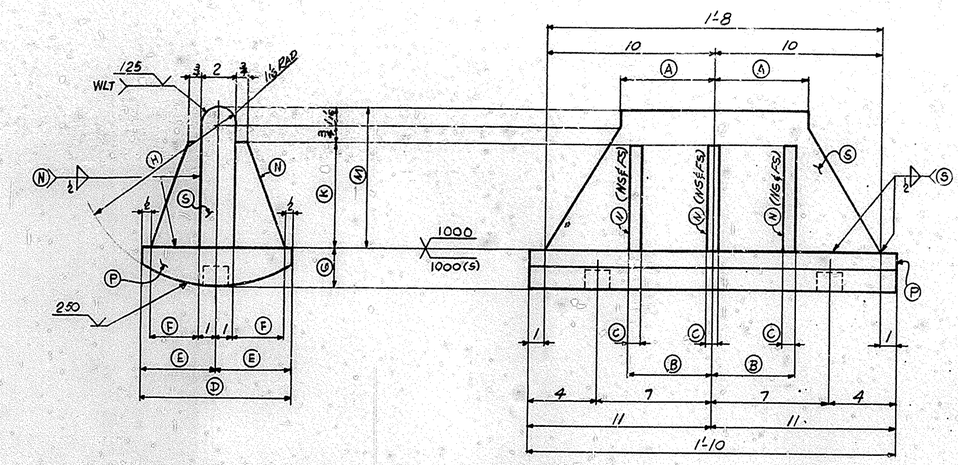

ROCKER SHOES 1RS1 TO 1RS6 (SEE TABLE BELOW FOR DIM.)

MARK	NO REQ'D	Ⓐ	Ⓑ	Ⓒ	Ⓓ	Ⓔ	Ⓕ	Ⓖ	Ⓗ	Ⓚ	Ⓜ	Ⓝ	Ⓟ	Ⓢ
1RS1	11	5⅞	5	¾	9	4½	3	2¼	8⅞	5⅞	7⅛	pc	pd	pf
1RS2	5	5⅞	5	¾	10	5	3½	2½	9⅞	6⅜	8 3/16	pg	ph	pk
1RS3	5	5⅞	5	¾	11	5½	4	2¾	10⅝	7⅛	8 15/16	pm	pn	pp
1RS4	3	7⅞	7	¾	11	5½	4	2¾	10⅝	7⅛	8 15/16	pm	pn	py
1RS5	4	5⅞	5	¾	1'-0	6	4½	3	11⅛	7⅞	9 11/16	ps	pt	pv
1RS6	2	5⅞	5	1	1'-0	6	4½	3	12⅛	8⅞	10 1/16	pw	pt	px

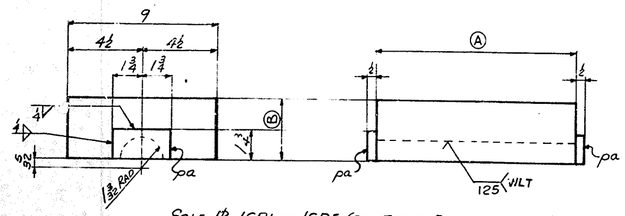

SOLE PL'S 1SP1 TO 1SP5 (SEE TABLE BELOW FOR DIM.)
(SHOP WELDED TO GIRDERS - NO PAINT)

MARK	NO REQ'D	Ⓐ	Ⓑ
1SP1	33	1'-0	3½
1SP2	21	1'-0	3¾
1SP3	5	1'-4	3½
1SP4	6	1'-0	4
1SP5	3	1'-4	3¼

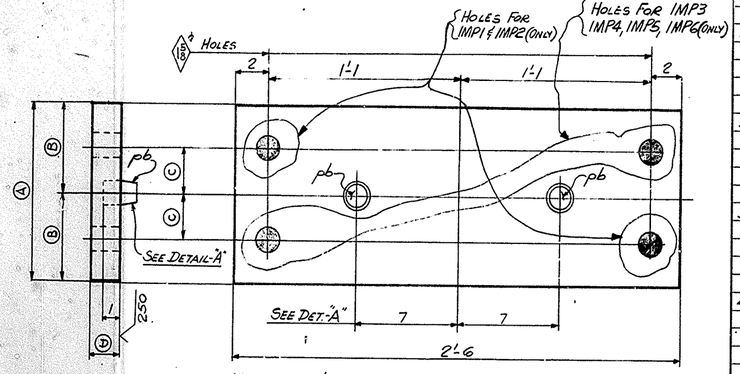

MASONRY PL'S 1MP1 TO 1MP6 (SEE TABLE BELOW FOR DIM.)

MARK	NO REQ'D	Ⓐ	Ⓑ	Ⓒ	Ⓓ
1MP1	9	10	5	1½	1¾
1MP2	5	11	5½	2	2
1MP3	8	1'-0	6	2½	2¼
1MP4	4	1'-1	6½	3	2¼
1MP5	2	1'-2	7	3½	2½
1MP6	2	10	5	1½	1¾

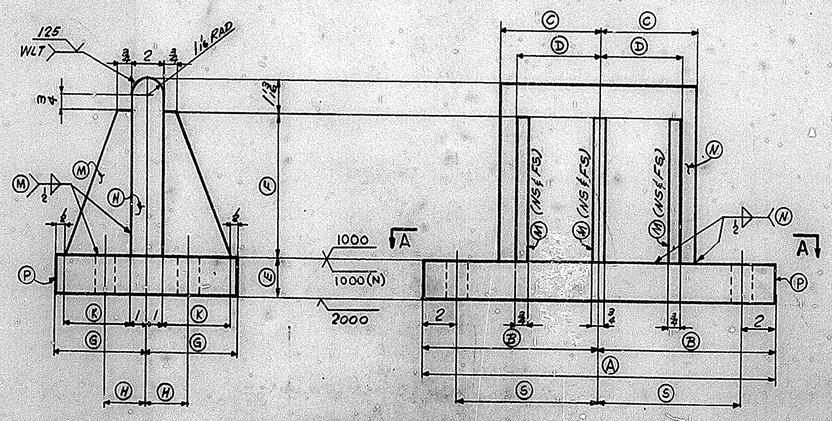

FIXED SHOES 1FS1 TO 1FS5 (SEE TABLE BELOW FOR DIM.)

MARK	NO REQ'D	Ⓐ	Ⓑ	Ⓒ	Ⓓ	Ⓔ	Ⓕ	Ⓖ	Ⓗ	Ⓚ	Ⓜ	Ⓝ	Ⓟ	Ⓢ
1FS1	13	1'-9	10½	5⅞	5	2¼	8⅛	5⅛	2	4	paa	pab	pac	8½
1FS2	3	2'-0	1'-0	7⅞	7	2	8⅞	5⅛	2	4	pad	paf	pag	10
1FS3	11	1'-10	11	5⅞	5	2¼	9⅛	6⅛	3	5	pah	pak	pam	9
1FS4	2	2'-0	1'-0	7⅞	7	2	9⅛	6	2½	4½	pan	pap	pas	10
1FS5	9	1'-9	10½	5⅞	5	2¼	8⅛	5½	2	4	paa	pab	pac	8½

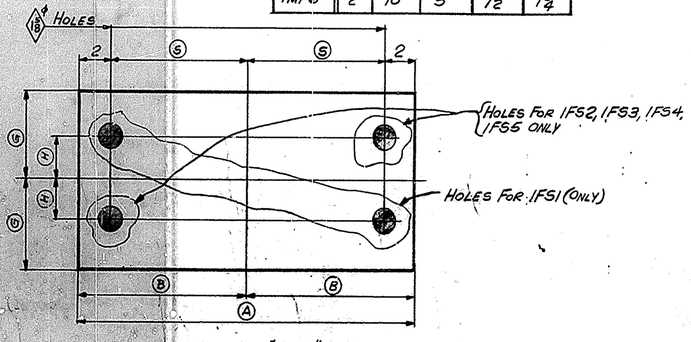

SECTION "A-A"

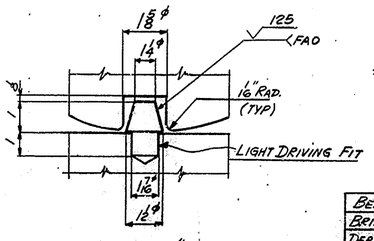

DETAIL - "A"

WORK THIS DWG. WITH DWG #2

NASHVILLE BRIDGE COMPANY

SHOP ORDER NO. B5729
WORK ORDER NO.
CONTRACT NO. CG T36

COMMONWEALTH OF KENTUCKY DEPT. OF HIGHWAYS, BRIDGE OVER NORTHWESTERN PKWY & 22ND ST. JEFFERSON COUNTY

BILL NO. 1A
DRAWING NO. 1

FABRICATION BESSEMER PLANT

WEIGHTS BY
CHECKED BY

SHIP	SHIPPING MARK	ITEM QUANT.	ASSEMBLY MARK	SHAPE	SECTION	FINISHED LENGTH FT.	FINISHED LENGTH IN.	ORDERED LENGTH FT.	ORDERED LENGTH IN.	P.O. NO.	ITEM NO.	REMARKS	SPECIF. WEIGHT	A.I.S.C. WEIGHT
					MAT'L ASTM A36									
33	1SP1	33		PL	9 x 3½	1	0					STK 26.04 135		
21	1SP2	21		PL	9 x 3¾	1	0					STK 9.82 134		
5	1SP3	5		PL	9 x 3½	1	4					STK 26.04 135		
6	1SP4	6		PL	9 x 4	1	0					STK 3.78 133		
3	1SP5	3		PL	9 x 3¼	1	4					STK 20.9 130		
		136	pa	PL	1¾ x ½	0	3½					STK 26.82 144		
9	1MP1	9		PL	10 x 1¾	2	6			3910	213	F1S - FIN. 2¾		
5	1MP2	5		PL	11 x 2	2	6			3910	213	F1S - FIN. 2½		
8	1MP3	8		PL	12 x 2¼	2	6			3910	207	F1S - FIN. 2⅜		
4	1MP4	4		PL	13 x 2¼	2	6			3910	207	F1S		
2	1MP5	2		PL	14 x 2½	2	6			3910	207	F1S - FIN. 2⅝		
2	1MP6	2		PL	10 x 1¾	2	6			3910	213	F1S - FIN. 2¾		
		56	pb	PL	1½ DIA.	0	2			STK				
11	1RS1				ROCKER SHOE									
		66	pc	PL	3 x ⅝	0	5⅞			STK	316	PL 4 x 6 CUTS 2		
		11	pd	PL	9 x 2½	1	10			3910	207	F2S - FIN. 2⅜		
		11	pf	PL	7 11/16 x 2	1	8			3910	213	F2W - FIN. 2 x 2		
5	1RS2				ROCKER SHOE									
		30	pg	PL	3½ x ¾	0	6⅞			3910	316	PL 4½ x 6½ CUTS 2		
		5	ph	PL	10 x 2½	1	10			3910	207	F2S - FIN. 2⅝		
		5	pk	PL	8 3/16 x 2	1	8			3910	213	F2W - FIN. 2 x 2		
5	1RS3				ROCKER SHOE									
		30	pm	PL	4 x ¾	0	7⅛			3910	316	PL 5 x 7½ CUTS 2		
		5	pn	PL	11 x 2¾	1	10			3910	207	F2S - FIN. 2¾		
		5	pp	PL	8 15/16 x 2	1	8			3910	213	F2W - FIN. 2 x 2		
3	1RS4				ROCKER SHOE									
		18	pm	PL	4 x ¾	0	7⅛			3910	316	PL 5 x 7½ CUTS 2		
		3	pn	PL	11 x 2¾	1	10			3910	207	F2S - FIN. 2¾		
		3	py	PL	8 15/16 x 2	1	8			3910	213	F2W - FIN. 2 x 2		
4	1RS5				ROCKER SHOE									
		24	ps	PL	4½ x ¾	0	7⅞			3910	316	PL 5½ x 8 CUTS 2		
		4	pt	PL	12 x 3	1	10			3910	201	F2S FIN. 2⅞		
		4	pv	PL	9 11/16 x 2	1	8			3910	213	F2W - FIN. 2 x 2		
2	1RS6				ROCKER SHOE									
		12	pw	PL	4½ x 1	0	8⅞			3910	316	PL 5½ x 8 CUTS 2		
		2	px	PL	12 x 3	1	10			3910	201	F2S FIN. 2⅞		
		2	px	PL	10 1/16 x 2	1	8			3910	213	F2W - FIN. 2 x 2		
					BILL CONT'D ON DWG. Nº 2									

BEARING DETAILS
BRIDGE OVER NORTHWESTERN PKWY & 22ND ST.
DEPT. OF HIGHWAYS, COMMONWEALTH OF KENTUCKY
JEFFERSON CO. FAP I-64-8(13) 2; SPSL-8273-2(8)
CONTRACTOR: MATTINGLY BRIDGE CO.

NASHVILLE BRIDGE COMPANY
NASHVILLE, TENN.
BESSEMER PLANT

RIVETS NONE
HOLES AS NOTED
FIELD CONN. SEE GN
SHOP PAINT FOR GEN
FIELD " NOTES
DRAWN BY FK DATE 10-17-69
CHECKED BY VM DATE 1-24-69
DATE PRINTED

APPROVED FOR SHOP
MMF 1/12/70 CHIEF DRAFTSMAN
AK 1/12/70 CHIEF ENGINEER
REVISION NOTES
APPROVAL 1/12/70

BILLS MATERIAL NO. 1A & 1B
CONT. C6736
S.O. B-5729

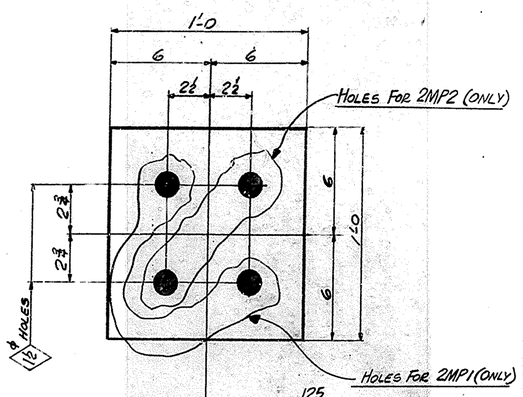

MAKE - 14 - MASONRY PL'S MK 2MP1

MAKE - 22 - MASONRY PL'S MK 2MP2

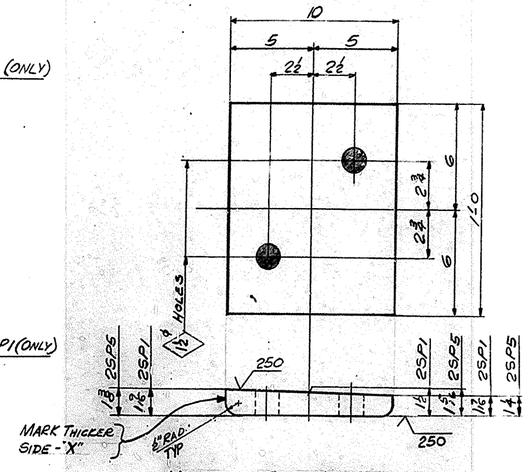

MAKE - 5 - SOLE PL'S MK 2SP1

MAKE - ONE - SOLE PL MK 2SP5

(SHOP WELDED TO GIRDER - NO PAINT)

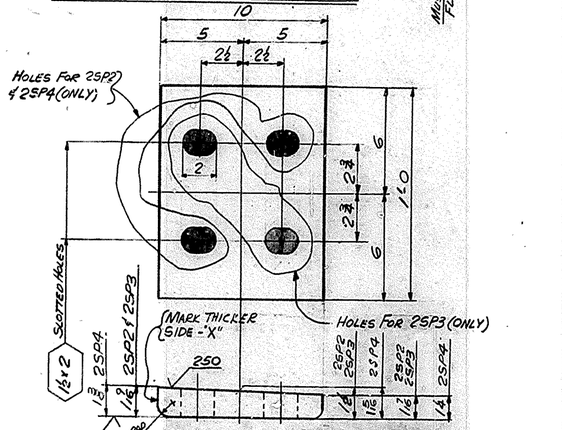

MAKE - 15 - SOLE PL'S MK 2SP2

MAKE - 14 - SOLE PL'S MK 2SP3

MAKE - ONE - SOLE PL MK 2SP4

(SHOP WELDED TO GIRDER NO PAINT)

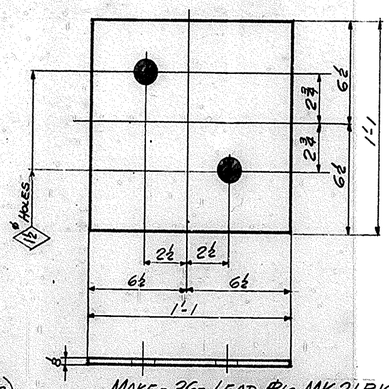

MAKE - 36 - LEAD PL'S MK 2LP10

(ASTM B29) - (NO PAINT)

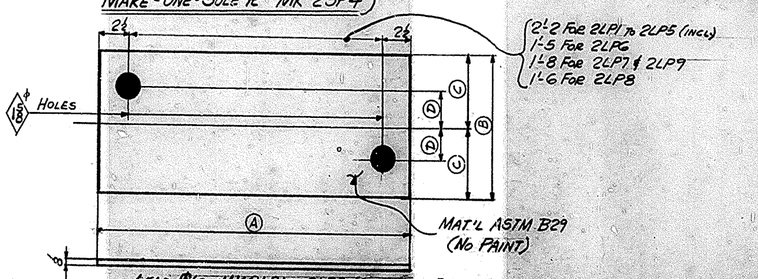

LEAD PL'S MK 2LP1 TO 2LP9 (SEE TABLE BELOW FOR DIM.)

MARK	No Req'd	Ⓐ	Ⓑ	Ⓒ	Ⓓ	MARK	No Req'd	Ⓐ	Ⓑ	Ⓒ	Ⓓ
2LP1	11	2'-7	11	5½	1½	2LP6	22	1'-10	1'-0	6	2
2LP2	5	2'-7	1'-0	6	2	2LP7	3	2'-1	1'-0	6	2
2LP3	8	2'-7	1'-1	6½	2½	2LP8	11	1'-11	1'-2	7	3
2LP4	4	2'-7	1'-2	7	3	2LP9	2	2'-1	1'-1	6½	2½
2LP5	2	2'-7	1'-3	7½	3½						

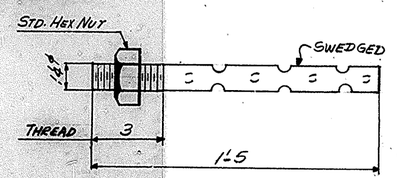

MAKE - 136 - ANCHOR BOLTS MK 2AB1

(NO PAINT)

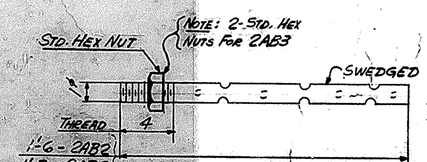

MAKE - 12 - ANCHOR BOLTS MK 2AB2

MAKE - 60 - ANCHOR BOLTS MK 2AB3

NO PAINT

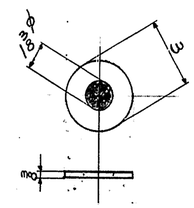

MAKE - 136 - WASHERS MK 2WI

(NO PAINT)

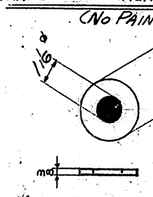

MAKE - 72 - WASHERS MK 2W2

(NO PAINT)

NASHVILLE BRIDGE COMPANY

SHOP ORDER NO. B-5729 | WORK ORDER NO. | CONTRACT NO. C6736

COMMONWEALTH OF KENTUCKY, DEPT. OF HIGHWAYS, BRIDGE OVER NORTHWESTERN PKWY & 22ND ST., JEFFERSON COUNTY

FABRICATION BESSEMER PLANT

BILL NO. 2 | DRAWING NO. 2

ITEM | WEIGHTS BY | CHECKED BY

SHIP	SHIPPING MARK	ITEM QUANT	ASSEMBLY MARK	SHAPE	SECTION	FINISHED LENGTH FT. IN.	OPTIONED LENGTH FT. IN.	P.O. NO.	ITEM NO.	REMARKS	SPECIF. WEIGHT	A.I.S.C. WEIGHT
					ALL MATERIAL A36 (UN)							
22	2MI2	22		PL	12 x 1½	1 0		STK 3574	217	FIS - FIN. 1⅝ PL		
14	2MI3	14		PL	12 x 1½	1 0			217	FIS		
5	2SI7	5		PL	10 x 1 7/16	1 0		STK 2574	217	F2S - FIN. 1⅝ PL		
15	2SI2	15		PL	10 x 1 7/16	1 0			217			
14	2SF3	14		PL	10 x 1 7/16	1 0			217			
ONE	2SP4	ONE		PL	10 x 1 3/8	1 0			217			
ONE	2SP5	ONE		PL	10 x 1 3/8	1 0		STK 3574	217			
11	2LP1	11		PL	11 x ⅞	2 7		R28678	111	LEAD PL (ASTM B29)		
5	2LP2	5			12 x ⅞	2 7		R28678	111			
8	2LP3	8			13 x ⅞	2 7		R28678	108			
4	2LP4	4			14 x ⅞	2 7		R28678	106			
2	2LP5	2			15 x ⅞	2 7		R28678	105			
22	2LP6	22			12 x ⅞	1 10		R28678	113			
3	2LP7	3			12 x ⅞	2 1		R28678	112			
11	2LP8	11			14 x ⅞	1 11		R28678	107			
2	2LP9	2		PL	13 x ⅞	2 1		R28678	109	LEAD PL ASTM B29		
36	2LP10	36		PL	13 x ⅞	1 1		R28678	111	LEAD PL (ASTM B29)		
136	2AB1	136		RD	1¼" DIA.	1 5		STK 2817	611	SWEDGED, 4" THRD.		
		136			STD. HEX NUT FOR 1¼" BOLT			R28679	201	ASTM A307		
12	2AB2	12		RD	1" DIA.	1 6		STK 2817	611	SWEDGED, 4" THRD		
60	2AB3	60		RD	1" DIA.	1 7		STK 2817	611	SWEDGED, 4" THRD		
		132			STD. HEX NUT FOR 1" BOLT			STK		ASTM A307		
136	2WI	136		PL	3" x ⅜	0 3		STK 3740	410			
72	2W2	72		PL	3" x ⅜	0 3		STK 3740	410			
1140	LBS.				LEAD			STK		ASTM B29		

SHEET TOTAL

NASHVILLE BRIDGE COMPANY

SHOP ORDER NO. B5729 | WORK ORDER NO. | CONTRACT NO. C6736

COMMONWEALTH OF KENTUCKY, DEPT. OF HIGHWAYS, BRIDGE OVER NORTHWESTERN PKWY & 22ND ST., JEFFERSON COUNTY

FABRICATION BESSEMER PLANT

BILL NO. 1B | DRAWING NO. 1

ITEM | WEIGHTS BY | CHECKED BY

SHIP	SHIPPING MARK	ITEM QUANT	ASSEMBLY MARK	SHAPE	SECTION	FINISHED LENGTH FT. IN.	OPTIONED LENGTH FT. IN.	P.O. NO.	ITEM NO.	REMARKS	SPECIF. WEIGHT	A.I.S.C. WEIGHT
					ALL MATERIAL A36							
					BILL CONT'D FROM DWG #1							
13	1FS1				FIXED SHOES							
		78	pac	PL	4 x ⅜	0 8⅝			3910	316	PL 5 x 8½ WTS 2	
		13	pab	PL	9 15/16 x 2	0 11¾			3910	213	F2W - PL 10½ x 2	
		13	pac	PL	11 x 24	1 9	68 x 7/13 WITH 24		3910	210	F2S	
3	1FS2				FIXED SHOE							
		18	pad	PL	4 x ⅜	0 8⅝			3910	316	PL 5 x 9 WTS 2	
		3	paf	PL	10 11/16 x 2	1 3¾			3910	213	F2W - PL 11 x 2	
		3	pag	PL	11 x 2	2 0			3910	213	F2S	
11	1FS3				FIXED SHOE							
		66	pah	PL	5 x ⅜	0 9⅞		STK 2574	316	PL 6 x 10 WTS 2		
		11	pak	PL	11 11/16 x 2	0 11¾			3910	213	F2W - PL 12 x 2	
		11	pam	PL	13 x 2½	1 10		STK 2574	206	F2S		
2	1FS4				FIXED SHOE							
		12	pan	PL	4½ x ⅜	0 9⅞			3910	316	PL 5½ x 10 WTS 2	
		2	pap	PL	11 11/16 x 2	1 3¾			3910	213	F2W - PL 12 x 2	
		2	pas	PL	12 x 2	2 0			3910	213	F2S	
9	1FS5				FIXED SHOE							
		54	paa	PL	4 x ⅜	0 8⅝		STK 2574	316	PL 5 x 8½ WTS 2		
		9	pab	PL	9 15/16 x 2	0 11¾			3910	213	F2W - PL 10½ x 2	
		9	pac	PL	11 x 24	1 9	68 x 7/13 WITH 24		3910	210	F2S	

SHEET TOTAL

WORK THIS DWG WITH DWG #1

FOR GENERAL NOTES SEE DWG GN1

MAT'L ASTM A36 (UN)

NOTES:
ALL SURFACE MARKED - WL7 ARE TO BE COATED WITH A HOT MIXTURE OF WHITE LEAD & TALLOW
ALL OTHER SURFACES TO RECEIVE ONE COAT OF SHOP PAINT.

APPROVED FOR SHOP: AHMP 1/7/70 CHIEF DRAFTSMAN; AK 1/7/70 CHIEF ENGINEER

REVISION NOTES: Approval 1/2/70

BEARING DETAILS
BRIDGE OVER NORTHWESTERN PKWY & 22ND ST.
DEPT. OF HIGHWAYS, COMMONWEALTH OF KENTUCKY
JEFFERSON CO. FAP 1-65-2(23)2; SP56-8273-7281
CONTRACTOR: MATTINGLY BROS. GE CO.

NASHVILLE BRIDGE COMPANY
NASHVILLE, TENN.
BESSEMER PLANT

RIVETS NONE | HOLES A6 | FIELD CONN. SEE GN1 | SHOP PAINT FOR GEN. | FIELD NOTES

DRAWN BY FK DATE 10-20-69 | IN CHARGE: GATT: (714-830) | CHECKED BY VM DATE 11/24/69 | DATE PRINTED

BILLS MATERIAL NO. 2 | CONT. C6736 | S.O. B-5729 | DRAWING NO. 2

BRIDGE

R. K. ELLIOTT CO., PITT., PA. REORDER 6-1967

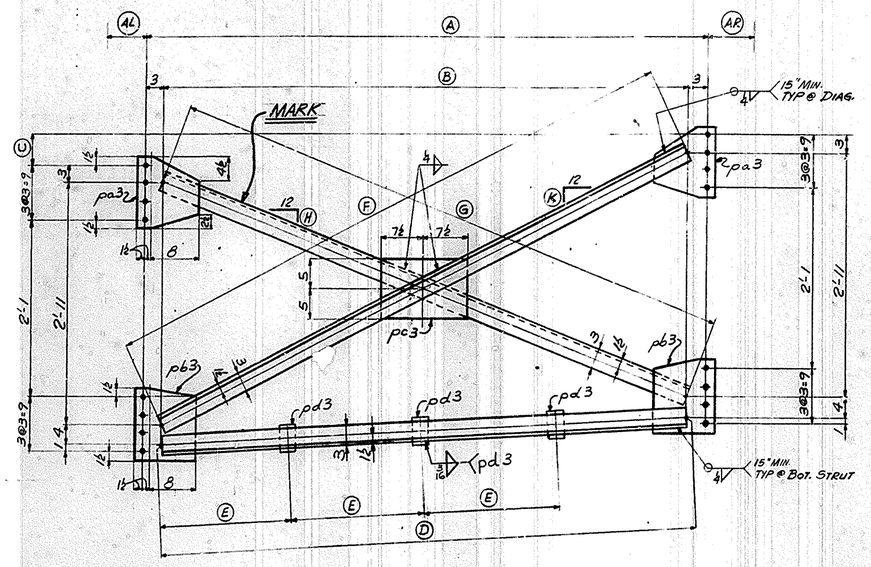

CROSS FRAMES MK 3CF1 TO 3CF8 (INCL)
(SEE TABLE BELOW FOR DIM.)

MARK	REQD	Ⓐ	Ⓑ	Ⓒ	Ⓓ	Ⓔ	Ⓕ	Ⓖ	Ⓗ	Ⓚ	Ⓐⓛ	Ⓐⓡ
3CF1	10	9'-6½	9'-0½	1⅞	9'-0½ (ac)	2'-3	9'-6⅝ (aa)	9'-5 7/16 (ab)	3 11/16	4 1/16	2¾	2¾
3CF2	2	9'-6¼	9'-0¼	1⅞	9'-0¼ (ad)	2'-3	9'-6⅜ (af)	9'-5 3/16 (ag)	3 11/16	4 1/16	3	2¾
3CF3	ONE	9'-6½	9'-0½	2⅛	9'-0½ (ac)	2'-3	9'-6 11/16 (ah)	9'-5⅜ (ak)	3⅝	4⅛	2¾	2¾
3CF4	ONE	9'-6¼	9'-0¼	2¼	9'-0¼ (ad)	2'-3	9'-6½ (am)	9'-5⅜ (an)	3⅝	4⅛	2¾	3
3CF5	ONE	9'-6¼	9'-0¼	2½	9'-0¼ (ad)	2'-3	9'-6 9/16 (ap)	9'-5 (as)	3⅝	4 3/16	2¾	3
3CF6	ONE	9'-6 9/16	9'-0 9/16	2 13/16	9'-0 9/16 (at)	2'-3	9'-6⅞ (av)	9'-5 3/16 (ag)	3 9/16	4 3/16	2¾	2¾
3CF7	2	9'-6 9/16	9'-0 9/16	3 7/16	9'-0 9/16 (at)	2'-3	9'-7⅛ (aw)	9'-5 (as)	3½	4¼	2¾	2¾
3CF8	2	9'-6⅝	9'-0⅝	5⅛	9'-0⅝ (aab)	2'-3	9'-7 11/16 (ax)	9'-4 9/16 (ay)	3 5/16	4 7/16	2¾	2¾

NASHVILLE BRIDGE COMPANY

SHOP ORDER NO. B-5727 | WORK ORDER NO. | CONTRACT NO. C6736 | ITEM

COMMONWEALTH OF KENTUCKY, DEPT. OF HIGHWAYS, BRIDGE
OVER NORTHWESTERN PKWY & 22ND ST., JEFFERSON COUNTY

FABRICATION BESSEMER PLANT

BILL NO. 3A | DRAWING NO. 3

WEIGHTS BY | CHECKED BY

SHOP	SHIPPING MARK	ITEM QUANT	ASSEMBLY MARK	SECTION	FINISHED LENGTH FT. IN.	ORDERED LENGTH FT. IN.	P.O. NO.	ITEM NO.	REMARKS	SPECIF. WEIGHT	A.I.S.C. WEIGHT
				MAT'L ASTM A36							
10	3CF1			CROSS FRAME							
		20	ac	L 3x2½x5/16	9 0½			3905	132		
		10	aa	L 3½x3x⅜	9 6⅝			3943	130		
		10	ab	L 3½x3x⅜	9 5 7/16			3943	130		
		20	pa3	PL 11x⅜	1 0	90 CUTS @ 11		3909	409		
		20	pb3	PL 11x⅜	1 0				409		
		10	pc3	PL 10x⅜	1 3	22 x 38 x 3 CUTS 280			412		
		30	pd3	BR 1½x⅜	0 3¾			STK 686	606		
2	3CF2			CROSS FRAME							
		4	ad	L 3x2½x5/16	9 0¼			3905	132		
		2	af	L 3½x3x⅜	9 6⅜			3943	130		
		2	ag	L 3½x3x⅜	9 5 3/16			3943	130		
		4	pa3	PL 11x⅜	1 0	90 CUTS @ 11		3909	409		
		4	pb3	PL 11x⅜	1 0				409		
		2	pc3	PL 10x⅜	1 3	22 x 38 x 3 CUTS 280			412		
		6	pd3	BR 1½x⅜	0 3¾			STK 686	606		
ONE	3CF3			CROSS FRAME							
		2	ac	L 3x2½x5/16	9 0½			3905	132		
		1	ah	L 3½x3x⅜	9 6 11/16			3943	130		
		1	ak	L 3½x3x⅜	9 5⅜			3943	130		
		2	pa3	PL 11x⅜	1 0	90 CUTS @ 11		3909	409		
		2	pb3	PL 11x⅜	1 0				409		
		1	pc3	PL 10x⅜	1 3	22 x 38 x 3 CUTS 280			412		
		3	pd3	BR 1½x⅜	0 3¾			STK 686	606		
ONE	3CF4			CROSS FRAME							
		2	ad	L 3x2½x5/16	9 0¼			3905	132		
		1	am	L 3½x3x⅜	9 6½			3943	130		
		1	an	L 3½x3x⅜	9 5⅜			3943	130		
		2	pa3	PL 11x⅜	1 0	90 CUTS @ 11		3909	409		
		2	pb3	PL 11x⅜	1 0				409		
		1	pc3	PL 10x⅜	1 3	22 x 38 x 3 CUTS 280			412		
		3	pd3	BR 1½x⅜	0 3¾			STK 686	606		
				5/16 WELD	21 LF						
				¼ WELD	210 LF						
									SHEET TOTAL		

NASHVILLE BRIDGE COMPANY

SHOP ORDER NO. B-5727 | WORK ORDER NO. | CONTRACT NO. C-6736 | ITEM

COMMONWEALTH OF KENTUCKY, DEPT. OF HIGHWAYS, BRIDGE
OVER NORTHWESTERN PKWY & 22ND ST., JEFFERSON COUNTY

FABRICATION BESSEMER PLANT

BILL NO. 3B | DRAWING NO. 3

WEIGHTS BY | CHECKED BY

SHOP	SHIPPING MARK	ITEM QUANT	ASSEMBLY MARK	SECTION	FINISHED LENGTH FT. IN.	ORDERED LENGTH FT. IN.	P.O. NO.	ITEM NO.	REMARKS	SPECIF. WEIGHT	A.I.S.C. WEIGHT
				MAT'L ASTM A36							
ONE	3CF5			CROSS FRAME							
		2	ad	L 3x2½x5/16	9 0¼			3905	132		
		1	ap	L 3½x3x⅜	9 6 11/16			3943	130		
		1	as	L 3½x3x⅜	9 5			3943	130		
		2	pa3	PL 11x⅜	1 0	90 CUTS @ 11		3909	409		
		2	pb3	PL 11x⅜	1 0				409		
		1	pc3	PL 10x⅜	1 3	22 x 38 x 3 CUTS 280			412		
		3	pd3	BR 1½x⅜	0 3¾			STK 686	606		
ONE	3CF6			CROSS FRAME							
		2	at	L 3x2½x5/16	9 0 9/16			3905	132		
		1	av	L 3½x3x⅜	9 6⅝			3943	130		
		1	ag	L 3½x3x⅜	9 5 3/16			3943	130		
		2	pa3	PL 11x⅜	1 0	90 CUTS @ 11		3909	409		
		2	pb3	PL 11x⅜	1 0				409		
		1	pc3	PL 10x⅜	1 3	22 x 38 x 3 CUTS 280			412		
		3	pd3	BR 1½x⅜	0 3¾			STK 686	606		
2	3CF7			CROSS FRAME							
		4	at	L 3x2½x5/16	9 0 9/16			3905	132		
		2	aw	L 3½x3x⅜	9 7⅛			3943	130		
		2	as	L 3½x3x⅜	9 5			3943	130		
		4	pa3	PL 11x⅜	1 0	90 CUTS @ 11		3909	409		
		4	pb3	PL 11x⅜	1 0				409		
		2	pc3	PL 10x⅜	1 3	22 x 38 x 3 CUTS 280			412		
		6	pd3	BR 1½x⅜	0 3¾			STK 686	606		
2	3CF8			CROSS FRAME							
		4	aab	L 3x2½x5/16	9 0⅝			3905	132		
		2	ax	L 3½x3x⅜	9 7 9/16			3943	130		
		2	ay	L 3½x3x⅜	9 4 9/16			3943	130		
		4	pa3	PL 11x⅜	1 0	90 CUTS @ 11		3909	409		
		4	pb3	PL 11x⅜	1 0				409		
		2	pc3	PL 10x⅜	1 3	22 x 38 x 3 CUTS 280			412		
		6	pd3	BR 1½x⅜	0 3¾			STK 686	606		
				5/16 WELD	9 LF						
				¼ WELD	90 LF						
									SHEET TOTAL		

12

FOR GENERAL NOTES SEE DWG GN1
MAT'L ASTM A36

APPROVED FOR SHOP
NM 3/18/70 CHIEF DRAFTSMAN
HAL 3/18/70 CHIEF ENGINEER
REVISION NOTES

CROSS FRAME DETAILS RAMP-A
BRIDGE OVER NORTHWESTERN PKWY & 22ND ST.
DEPT. OF HIGHWAYS, COMMONWEALTH OF KENTUCKY
JEFFERSON CTY. FAP 265-2(34), SP56-273-11L
CONTRACTOR: MATTHEWS BRIDGE CO.

NASHVILLE BRIDGE COMPANY
NASHVILLE, TENN.
BESSEMER PLANT

RIVETS: NONE | HOLES: 29/32 DRILLED | FIELD CONN. 29/32 HSB | SHOP PAINT SEE GN1 | FIELD SEE GN1
DRAWN BY FK DATE 10-27-69 | IN CHARGE GRAFF (TENN)
CHECKED BY VM DATE 11/26/69
DATE PRINTED

BILL MATERIAL NO 3A & 3B | CONT. C6736 | S.O. B-5727 | DRAWING NO 3

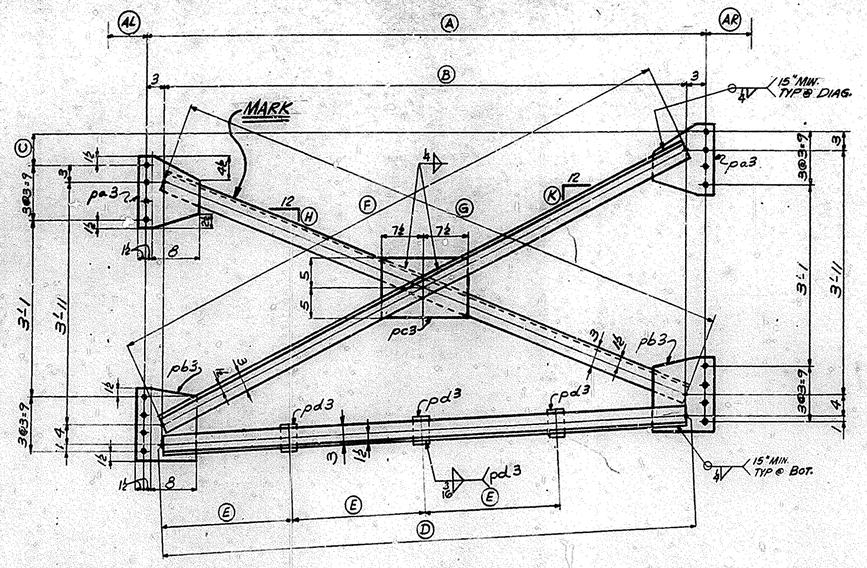

CROSS FRAMES MK 4CF1 to 4CF8 (INCL)
(SEE TABLE BELOW FOR DIM.)

MARK	REQ'D	Ⓐ	Ⓑ	Ⓒ	Ⓓ	Ⓔ	Ⓕ	Ⓖ	Ⓗ	Ⓚ	Ⓐⓛ	Ⓐⓡ
4CF1	ONE	7'-2 11/16	6'-8 11/16	2 3/8	6'-8 11/16 (aa)	1'-8	7'-10 13/16 (ab)	7'-7 15/16 (ac)	6 9/16	7 7/16	2 3/4	2 3/4
4CF2	ONE	6'-9 1/8	6'-3 1/8	2 11/16	6'-3 1/8 (ad)	1'-6 1/2	7'-6 (af)	7'-3 3/16 (ag)	7 1/16	7 15/16	2 3/4	2 3/4
4CF3	ONE	7'-1 13/16	6'-7 9/16	2 13/16	6'-7 9/16 (ah)	1'-7 3/4	7'-9 13/16 (ak)	7'-6 15/16 (am)	6 11/16	7 1/2	2 3/4	2 3/4
4CF4	3	9'-3 1/8	8'-9 1/8	3 5/8	8'-9 1/8 (an)	2'-2 1/4	9'-8 5/8 (ap)	9'-5 5/8 (as)	4 15/16	5 13/16	2 3/4	2 3/4
4CF5	ONE	6'-3 1/2	5'-9 1/2	2 1/2	5'-9 1/2 (at)	1'-5 1/4	7'-1 1/4 (av)	6'-10 1/2 (aw)	7 11/16	8 9/16	3	2 3/4
4CF6	ONE	6'-5 7/16	5'-11 7/16	2 9/16	5'-11 7/16 (ax)	1'-5 3/4	7'-3 (ay)	7'-0 3/16 (aab)	7 1/16	8 5/16	3	2 3/4
4CF7	3	9'-2 7/8	8'-8 7/8	3 5/8	8'-8 7/8 (aac)	2'-2	9'-8 3/8 (aad)	9'-5 7/16 (aaf)	4 15/16	5 13/16	3	2 3/4
4CF8	5	9'-9 5/16	9'-3 5/16	3 13/16	9'-3 5/16 (aag)	2'-3 3/4	10'-2 5/16 (aah)	9'-11 3/8 (aak)	4 11/16	5 1/2	2 3/4	2 3/4

NASHVILLE BRIDGE COMPANY

SHOP ORDER NO. B5727 | WORK ORDER NO. | CONTRACT NO. C-6736

COMMONWEALTH OF KENTUCKY, DEPT. OF HIGHWAYS, BRIDGE OVER NORTHWESTERN PKWY & 22ND ST., JEFFERSON COUNTY

BILL NO. 4A | DRAWING NO. 4

FABRICATION BESSEMER PLANT

ITEM | WEIGHTS BY | CHECKED BY

SHOP	SHIPPING MARK	ITEM QUANT.	ASSEMBLY MARK	GRADE	SECTION	FINISHED LENGTH FT. IN.	ORDERED LENGTH FT. IN.	P.O. NO.	ITEM NO.	REMARKS	SPECIF. WEIGHT	ASSC WEIGHT
					MAT'L ASTM A36							
ONE 4CF1					CROSS FRAME							
		2	aa		L 3x2½x5/16	6 8 1/16			3905/132			
		1	ab		L 3½x3x3/8	7 10 13/16			3943/130			
		1	ac		L 3½x3x3/8	7 7 15/16			3943/130			
		2	pa3	PL	11x3/8	1 0	90 CUTS 2@11		3909/409			
		2	pb3	PL	11x3/8	1 0			409			
		1	pc3	PL	10x3/8	1 3	82x32.5 CUTS 240		412			
		3	pd3	BR	1½x3/8	0 3 3/4		STK 686	606			
ONE 4CF2					CROSS FRAME							
		2	ad		L 3x2½x5/16	6 3 1/8			3905/132			
		1	af		L 3½x3x3/8	7 6			3943/130			
		1	ag		L 3½x3x3/8	7 3 3/16			3943/130			
		2	pa3	PL	11x3/8	1 0	90 CUTS 2@11		3909/409			
		2	pb3	PL	11x3/8	1 0			409			
		1	pc3	PL	10x3/8	1 3	82x32.5 CUTS 240		412			
		3	pd3	BR	1½x3/8	0 3 3/4		STK 686	606			
ONE 4CF3					CROSS FRAME							
		2	ah		L 3x2½x5/16	6 7 1/16			3905/132			
		1	ak		L 3½x3x3/8	7 9 13/16			3943/130			
		1	am		L 3½x3x3/8	7 6 15/16			3943/130			
		2	pa3	PL	11x3/8	1 0	90 CUTS 2@11		3909/409			
		2	pb3	PL	11x3/8	1 0			409			
		1	pc3	PL	10x3/8	1 3	82x32.5 CUTS 240		412			
		3	pd3	BR	1½x3/8	0 3 3/4		STK 686	606			
3 4CF4					CROSS FRAME							
		6	an		L 3x2½x5/16	8 9 1/16			3905/132			
		3	ap		L 3½x3x3/8	9 8 5/8			3943/130			
		3	as		L 3½x3x3/8	9 5 5/8			3943/130			
		6	pa3	PL	11x3/8	1 0	90 CUTS 2@11		3909/409			
		6	pb3	PL	11x3/8	1 0			409			
		3	pc3	PL	10x3/8	1 3	82x32.5 CUTS 240		412			
		9	pd3	BR	1½x3/8	0 3 3/4		STK 686	606			
					3/16 WELD	9 LF						
					1/4 WELD	90 LF						
										SHEET TOTAL		

NASHVILLE BRIDGE COMPANY

SHOP ORDER NO. B-5727 | WORK ORDER NO. | CONTRACT NO. C-6736

COMMONWEALTH OF KENTUCKY, DEPT. OF HIGHWAYS, BRIDGE OVER NORTHWESTERN PKWY & 22ND ST., JEFFERSON COUNTY

BILL NO. 4B | DRAWING NO. 4

FABRICATION BESSEMER PLANT

ITEM | WEIGHTS BY | CHECKED BY

SHOP	SHIPPING MARK	ITEM QUANT.	ASSEMBLY MARK	GRADE	SECTION	FINISHED LENGTH FT. IN.	ORDERED LENGTH FT. IN.	P.O. NO.	ITEM NO.	REMARKS	SPECIF. WEIGHT	ASSC WEIGHT
					MAT'L ASTM A36							
ONE 4CF5					CROSS FRAME							
		2	at		L 3x2½x5/16	5 9 1/2			3905/132			
		1	av		L 3½x3x3/8	7 1/4			3943/130			
		1	aw		L 3½x3x3/8	6 10 1/2			3943/130			
		2	pa3	PL	11x3/8	1 0	90 CUTS 2@11		3909/409			
		2	pb3	PL	11x3/8	1 0			409			
		1	pc3	PL	10x3/8	1 3	82x32.5 CUTS 240		412			
		3	pd3	BR	1½x3/8	0 3 3/4		STK 686	606			
ONE 4CF6					CROSS FRAME							
		2	ax		L 3x2½x5/16	5 11 1/2			3905/132			
		1	ay		L 3½x3x3/8	7 3			3943/130			
		1	aab		L 3½x3x3/8	7 0 3/8			3943/130			
		2	pa3	PL	11x3/8	1 0	90 CUTS 2@11		3909/409			
		2	pb3	PL	11x3/8	1 0			409			
		1	pc3	PL	10x3/8	1 3	82x32.5 CUTS 240		412			
		3	pd3	BR	1½x3/8	0 3 3/4		STK 686	606			
3 4CF7					CROSS FRAME							
		6	aac		L 3x2½x5/16	8 8 3/4			3905/132			
		3	aad		L 3½x3x3/8	9 8 3/8			3943/130			
		3	aaf		L 3½x3x3/8	9 5 7/16			3943/130			
		6	pa3	PL	11x3/8	1 0	90 CUTS 2@11		3909/409			
		6	pb3	PL	11x3/8	1 0			409			
		3	pc3	PL	10x3/8	1 3	82x32.5 CUTS 240		412			
		9	pd3	BR	1½x3/8	0 3 3/4		STK 686	606			
5 4CF8					CROSS FRAME							
		10	aag		L 3x2½x5/16	9 3 5/16			3905/132			
		5	aah		L 3½x3x3/8	10 2 5/8			3943/130			
		5	aak		L 3½x3x3/8	9 11 3/8			3943/130			
		10	pa3	PL	11x3/8	1 0	90 CUTS 2@11		3909/409			
		10	pb3	PL	11x3/8	1 0			409			
		5	pc3	PL	10x3/8	1 3	82x32.5 CUTS 240		412			
		15	pd3	BR	1½x3/8	0 3 3/4		STK 686	606			
					3/16 WELD	15 LF						
					1/4 WELD	150 LF						
										SHEET TOTAL		

13

FOR GENERAL NOTES SEE DWG GN1
MAT'L ASTM A36

CROSS FRAME DETAILS I-64
BRIDGE OVER NORTHWESTERN PKWY & 22ND ST.
DEPT. OF HIGHWAYS, COMMONWEALTH OF KENTUCKY
JEFFERSON CTY. FAP 264-2(34), SP56-279-11L
CONTRACTOR: MATTINGLY BRIDGE CO.

NASHVILLE BRIDGE COMPANY
NASHVILLE, TENN.
BESSEMER PLANT

APPROVED FOR SHOP: NWMF 7/19/70 — CHIEF DRAFTSMAN; 7/14/70 — CHIEF ENGINEER
REVISION NOTES: 1 5/12/70

RIVETS: NONE | HOLES: 3/16" PUNCHED | FIELD CONN.: 7/8" HSB | SHOP PAINT: SEE GN1 | FIELD: SEE GN1

DRAWN BY: EK DATE: 10-27-69
IN CHARGE: GATTI (TENSOR)
CHECKED BY: VM DATE: 1/26/70
DATE PRINTED:

BILLS MATERIAL NO: 4A & 4B | CONT. C6736 | S.O. B-5727 | DRAWING NO. 4

BRIDGE

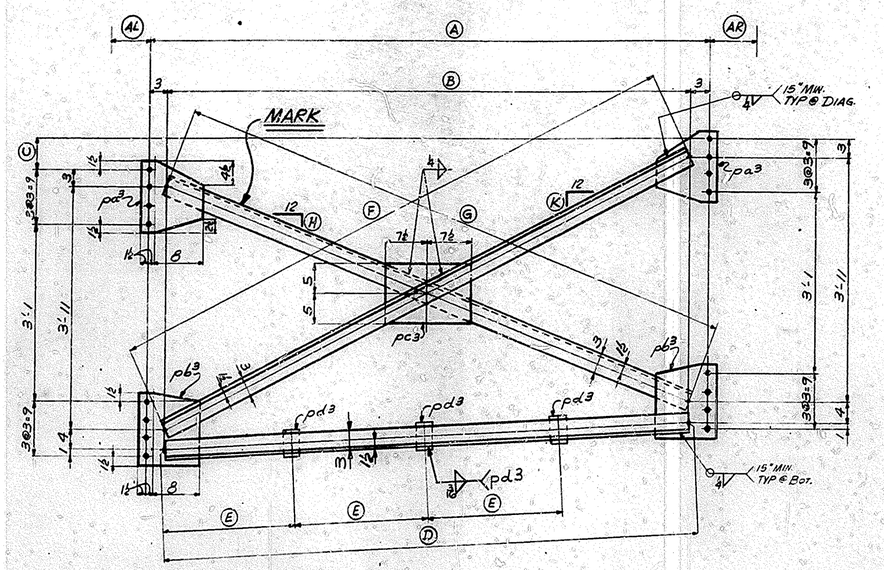

CROSS FRAMES MK 5CF9 TO 5CF16 (INCL)
(SEE TABLE BELOW FOR DIM.)

MARK	REQ'D	(A)	(B)	(C)	(D)	(E)	(F)	(G)	(H)	(K)	(AL)	(AR)
5CF9	ONE	5'-11 9/16	5'-5 9/16	2 3/8	5'-5 9/16 (aa)	1'-4 1/4	6'-10 (ab)	6'-7 1/4 (ac)	8 3/16	9 1/16	2 3/4	2 3/4
5CF10	ONE	6'-7 1/8	6'-1 1/8	2 5/8	6'-1 1/8 (ad)	1'-6 1/4	7'-4 5/16 (af)	7'-1 1/2 (ag)	7 5/16	8 1/8	2 3/4	2 3/4
5CF11	4	9'-9 1/16	9'-3 1/16	3 13/16	9'-3 1/16 (ah)	2'-3 3/4	10'-2 1/16 (ak)	9'-11 1/8 (am)	4 11/16	5 1/2	3	2 3/4
5CF12	ONE	4'-10 1/8	4'-4 1/8	2	4'-4 1/8 (an)	1'-0 3/4	5'-11 9/16 (ap)	5'-8 3/8 (as)	10 3/8	11 5/16	4 1/4	2 3/4
5CF13	ONE	5'-6 1/16	5'-0 1/16	2 3/16	5'-0 1/16 (at)	1'-3	6'-5 5/8 (av)	6'-2 3/8 (aw)	8 15/16	9 13/16	2 3/4	2 3/4
5CF14	ONE	6'-2 3/8	5'-8 3/8	2 7/16	5'-8 3/8 (ax)	1'-5	7'-0 3/8 (ay)	6'-9 9/16 (aab)	7 13/16	8 11/16	2 3/4	2 3/4
5CF15	ONE	5'-7 13/16	5'-3 13/16	2 3/8	5'-3 13/16 (aac)	1'-3 3/4	6'-8 5/8 (aad)	6'-5 13/16 (aaf)	8 3/8	9 5/16	2 3/4	2 3/4
5CF16	ONE	5'-4 5/16	4'-10 5/16	2 3/16	4'-10 5/16 (aag)	1'-2 1/2	6'-4 1/4 (aah)	6'-1 1/2 (aak)	9 1/4	10 1/8	2 3/4	2 3/4

NASHVILLE BRIDGE COMPANY

SHOP ORDER NO. B5727 — WORK ORDER NO. — CONTRACT NO. C6736 — BILL NO. 5A — DRAWING NO. 5

COMMONWEALTH OF KENTUCKY, DEPT. OF HIGHWAYS, BRIDGE
OVER NORTHWESTERN PKWY & 22ND ST., JEFFERSON COUNTY

FABRICATION BESSEMER PLANT

ITEM — WEIGHTS BY — CHECKED BY

SHIP	SHIPPING MARK	ITEM QUANT	ASSEMBLY MARK	SERIES	SECTION	FINISHED LENGTH FT. IN.	ORDERED LENGTH FT. IN.	P.O. NO.	ITEM NO.	REMARKS	SPECIF. WEIGHT	AISC WEIGHT
					MAT'L ASTM A36							
ONE	5CF9				CROSS FRAME							
		2	aa	L	3x2½x5/16	5 5 3/16			3905	132		
		1	ab	L	3½x3x⅜	6 10			3943	130		
		1	ac	L	3½x3x⅜	6 7¼			3943	130		
		2	pa3	PL	11x⅜	1 0	90 CUTS 8@11		3909	409		
		2	pb3	PL	11x⅜	1 0				409		
		1	pc3	PL	10x⅜	1 3	82-3@5-3 CUTS 260			412		
		3	pd3	BR	½x⅜	0 3¾			STK 686	606		
ONE	5CF10				CROSS FRAME							
		2	ad	L	3x2½x5/16	6 1/8			3905	132		
		1	af	L	3½x3x⅜	7 4 5/16			3943	130		
		1	ag	L	3½x3x⅜	7 1½			3943	130		
		2	pa3	PL	11x⅜	1 0	90 CUTS 8@11		3909	409		
		2	pb3	PL	11x⅜	1 0				409		
		1	pc3	PL	10x⅜	1 3	82-3@5-3 CUTS 260			412		
		3	pd3	BR	½x⅜	0 3¾			STK 686	606		
4	5CF11				CROSS FRAME							
		8	ah	L	3x2½x5/16	9 3/16			3905	132		
		4	ak	L	3½x3x⅜	10 1/16			3943	130		
		4	am	L	3½x3x⅜	9 11/16			3943	130		
		8	pa3	PL	11x⅜	1 0	90 CUTS 8@11		3909	409		
		8	pb3	PL	11x⅜	1 0				409		
		4	pc3	PL	10x⅜	1 3	82-3@5-3 CUTS 260			412		
		12	pd3	BR	½x⅜	0 3¾			STK 686	606		
ONE	5CF12				CROSS FRAME							
		2	an	L	3x2½x5/16	4 4 5/16			3905	132		
		1	ap	L	3½x3x⅜	5 11 9/16			3943	130		
		1	as	L	3½x3x⅜	5 8⅜			3943	130		
		2	pa3	PL	11x⅜	1 0	90 CUTS 8@11		3909	409		
		2	pb3	PL	11x⅜	1 0				409		
		1	pc3	PL	10x⅜	1 3	82-3@5-3 CUTS 260			412		
		3	pd3	BR	½x⅜	0 3¾			STK 686	606		
					¾ WELD	11 LF						
					¼ WELD	105 LF						
										SHEET TOTAL		

NASHVILLE BRIDGE COMPANY

SHOP ORDER NO. B-5727 — WORK ORDER NO. — CONTRACT NO. C6736 — BILL NO. 5B — DRAWING NO. 5

COMMONWEALTH OF KENTUCKY, DEPT. OF HIGHWAYS, BRIDGE
OVER NORTHWESTERN PKWY & 22ND ST., JEFFERSON COUNTY

FABRICATION BESSEMER PLANT

ITEM — WEIGHTS BY — CHECKED BY

SHIP	SHIPPING MARK	ITEM QUANT	ASSEMBLY MARK	SERIES	SECTION	FINISHED LENGTH FT. IN.	ORDERED LENGTH FT. IN.	P.O. NO.	ITEM NO.	REMARKS	SPECIF. WEIGHT	AISC WEIGHT
					MAT'L ASTM A36							
ONE	5CF13				CROSS FRAME							
		2	at	L	3x2½x5/16	5 0 1/16			3905	132		
		1	av	L	3½x3x⅜	6 5 3/8			3943	130		
		1	aw	L	3½x3x⅜	6 2¼			3943	130		
		2	pa3	PL	11x⅜	1 0	90 CUTS 8@11		3909	409		
		2	pb3	PL	11x⅜	1 0				409		
		1	pc3	PL	10x⅜	1 3	82-3@5-3 CUTS 260			412		
		3	pd3	BR	½x⅜	0 3¾			STK 686	606		
ONE	5CF14				CROSS FRAME							
		2	ax	L	3x2½x5/16	5 8⅜			3905	132		
		1	ay	L	3½x3x⅜	7 0⅜			3943	130		
		1	aab	L	3½x3x⅜	6 9 9/16			3943	130		
		2	pa3	PL	11x⅜	1 0	90 CUTS 8@11		3909	409		
		2	pb3	PL	11x⅜	1 0				409		
		1	pc3	PL	10x⅜	1 3	82-3@5-3 CUTS 260			412		
		3	pd3	BR	½x⅜	0 3¾			STK 686	606		
ONE	5CF15				CROSS FRAME							
		2	aac	L	3x2½x5/16	5 3⅜			3905	132		
		1	aad	L	3½x3x⅜	6 8⅜			3943	130		
		1	aaf	L	3½x3x⅜	6 5⅜			3943	130		
		2	pa3	PL	11x⅜	1 0	90 CUTS 8@11		3909	409		
		2	pb3	PL	11x⅜	1 0				409		
		1	pc3	PL	10x⅜	1 3	82-3@5-3 CUTS 260			412		
		3	pd3	BR	½x⅜	0 3¾			STK 686	606		
ONE	5CF16				CROSS FRAME							
		2	aag	L	3x2½x5/16	4 10⅝			3905	132		
		1	aah	L	3½x3x⅜	6 4¼			3943	130		
		1	aak	L	3½x3x⅜	6 1½			3943	130		
		2	pa3	PL	11x⅜	1 0	90 CUTS 8@11		3909	409		
		2	pb3	PL	11x⅜	1 0				409		
		1	pc3	PL	10x⅜	1 3	82-3@5-3 CUTS 260			412		
		3	pd3	BR	½x⅜	0 3¾			STK 686	606		
					¾ WELD	6 LF						
					¼ WELD	60 LF						
										SHEET TOTAL		

14

FOR GENERAL NOTES SEE DWG GN1
MAT'L ASTM A36

CROSS FRAME DETAILS I64
BRIDGE OVER NORTHWESTERN PKWY & 22ND ST.
DEPT. OF HIGHWAYS, COMMONWEALTH OF KENTUCKY
JEFFERSON CTY. FAP I64-2(34), SP56-273-11L
CONTRACTOR: MATTINGLY BRIDGE CO.

NASHVILLE BRIDGE COMPANY
NASHVILLE, TENN.
BESSEMER PLANT

APPROVED FOR SHOP: WLE 7/15/70 CHIEF DRAFTSMAN — HK 7/15/70 CHIEF ENGINEER
REVISION NOTES

RIVETS NONE — HOLES 1/8 ø OR NOTED — FIELD CONN. 7/8 ø HSB — SHOP PAINT SEE GN1 — FIELD

DRAWN BY EK — DATE 10-27-69 — IN CHARGE OF PTT. (YANDOS) — CHECKED BY VM — DATE 11/24/69 — DATE PRINTED

BILL MATERIAL NO. 5A/5B — CONT. C6736 — S.O. B-5727 — DRAWING NO. 5

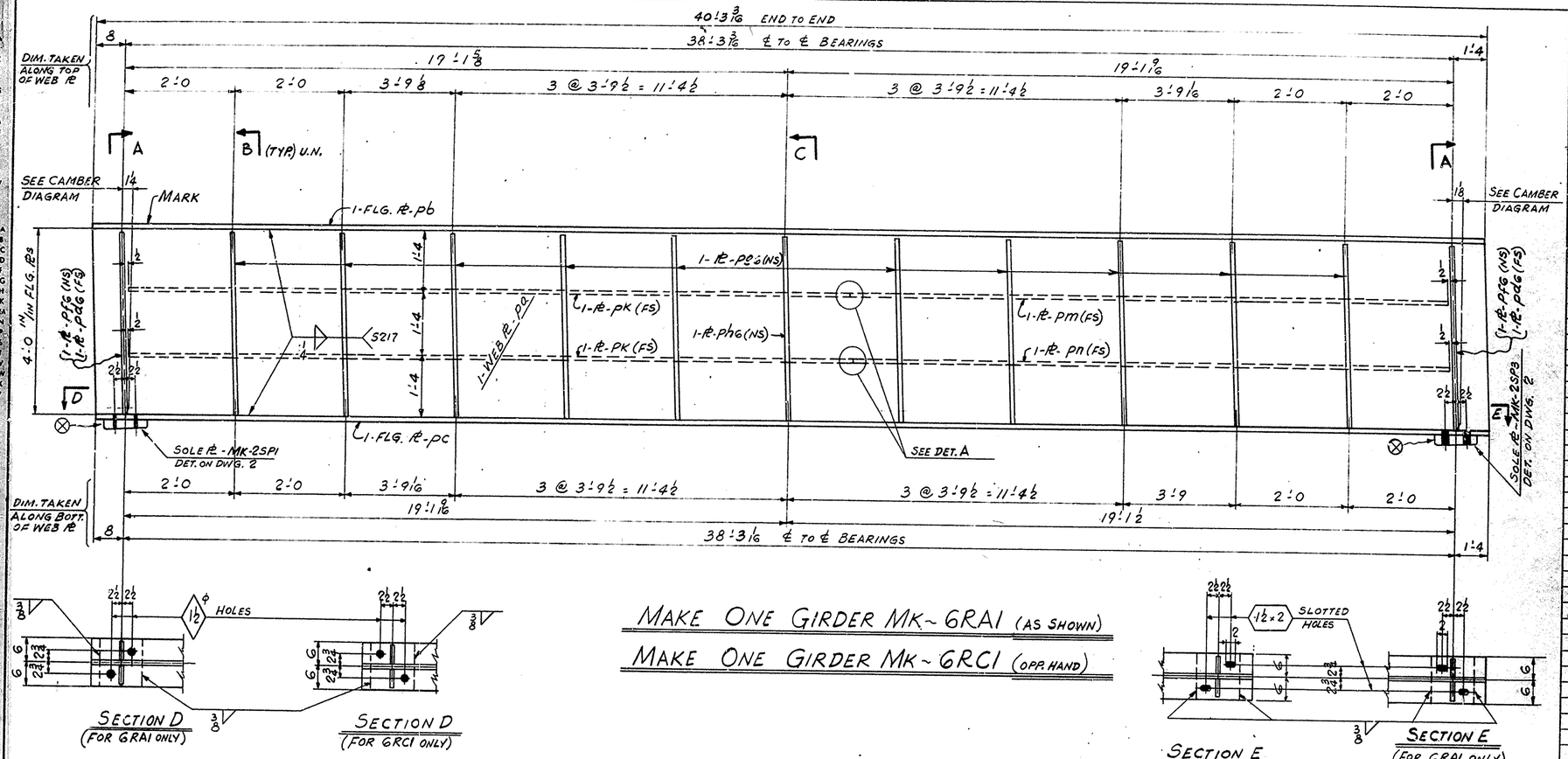

MAKE ONE GIRDER MK-6RAI (AS SHOWN)

MAKE ONE GIRDER MK-6RCI (OPP. HAND)

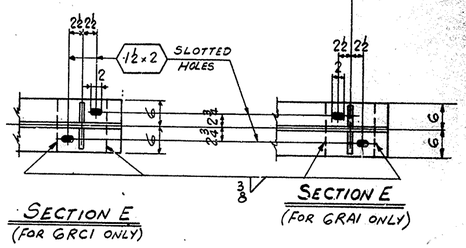

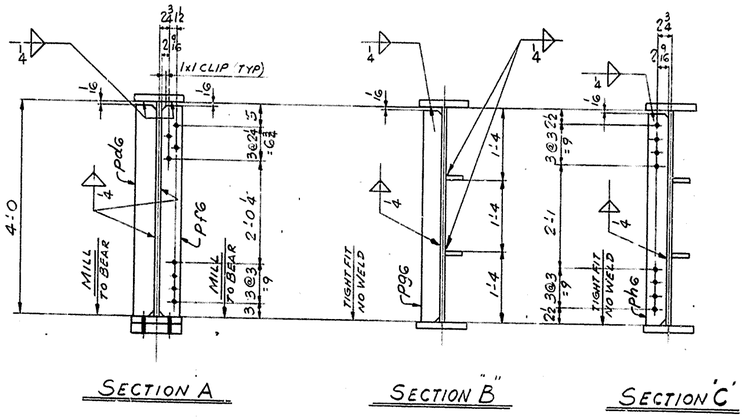

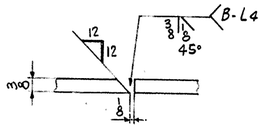

DETAIL A

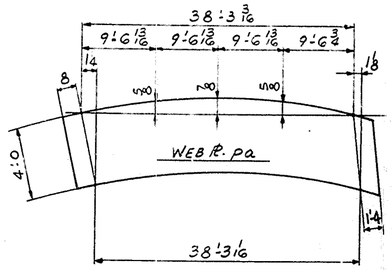

CAMBER DIAGRAM & WEB PL CUTTING SKETCH

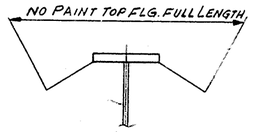

TYP. SECTION THRU TOP FLG

MATERIAL ASTM-A36
FOR GENERAL NOTES SEE DWG. GN1
⊗ INDICATES THICKER SIDE OF SOLE PL

15

NASHVILLE BRIDGE COMPANY

SHOP ORDER NO. B 5725
WORK ORDER NO.
CONTRACT NO. C 6736

COMMONWEALTH OF KENTUCKY DEPT. OF HIGHWAYS, BRIDGE OVER NORTH WESTERN PARKWAY & 22ND ST. JEFFERSON COUNTY

FABRICATION BESSEMER PLANT

BILL NO. 6
DRAWING NO. 6

WEIGHTS BY
CHECKED BY

SHOP	SHIPPING MARK	ITEM (CLASS)	ASSEMBLY MARK	SHAPE	SECTION	FINISHED LENGTH FT. IN.	ORDERED LENGTH FT. IN.	PCS NO	WTS NO	REMARKS	SPEC. REF.	AISC REFERENCE
					MATERIAL ASTM-A36							
ONE	GRA1				GIRDER							
ONE	GRC1				GIRDER							
		2	pa	PL	48 3/8 x 3/8	40 4 1/16	49'-4 0	3708	557			2/2
		2	pb	PL	12 x 9/16	40 3 1/16	98 CUTS	3810	323			2/3
		2	pc	PL	12 x 9/16	40 3 1/16	98 CUTS	3810	323			2/3
		4	pdg	PL	5 1/2 x 1/2	3 11 15/16		STK 3680	405	(MIE)		2/4
		4	pfg	PL	5 1/2 x 1/2	3 11 15/16		STK 3680	405	(MIE)		2/4
		20	pgg	PL	4 x 3/8	3 11 15/16		3905	405	(FIE)		2/5
		2	phg	PL	4 x 3/8	3 11 15/16			405	(FIE)		2/5
		4	pk	PL	4 x 3/8	20 0			405			2/7
		2	pm	PL	4 x 3/8	18 11 9/16			405			2/6
		2	pn	PL	4 x 3/8	18 11 9/16		3905	405			2/6
		2	2SP1		SOLE PL					DET. ON DWG. 2		
		2	2SP3		SOLE PL					DET. ON DWG. 2		
					1/2 WELD	377 LF						
					3/8 WELD	9 LF						
										SHEET TOTAL		

GIRDER DETAILS - SPAN R4 - RAMP A
BRIDGE OVER NORTH WESTERN PARKWAY & 22ND ST.
DEPT. OF HIGHWAYS - COMMONWEALTH OF KENTUCKY
JEFFERSON COUNTY F.A.P. I-64-2(34); SP56-273 ILL
CONTRACTOR: MATTINGLY BRIDGE CO.

NASHVILLE BRIDGE COMPANY
NASHVILLE, TENN.
BESSEMER PLANT

APPROVED FOR SHOP
NMP 7/15/70 CHIEF DRAFTSMAN
JAC 7/16/70 CHIEF ENGINEER

REVISION NOTES
No CHANGE 2/10/70

HOLES 15/16 ϕ OR NOTED
FIELD CONN. 7/8 ϕ H.S.B.
SHOP PAINT } SEE GN1
FIELD

DRAWN BY G.D. DATE 10-14-69
IN CHARGE R.A. TI (TENSOR)
CHECKED BY DATE 12/2/69
DATE PRINTED

BILLS MATERIAL NO 6
CONT. C 6736
S.O. B-5725
DRAWING NO. 6

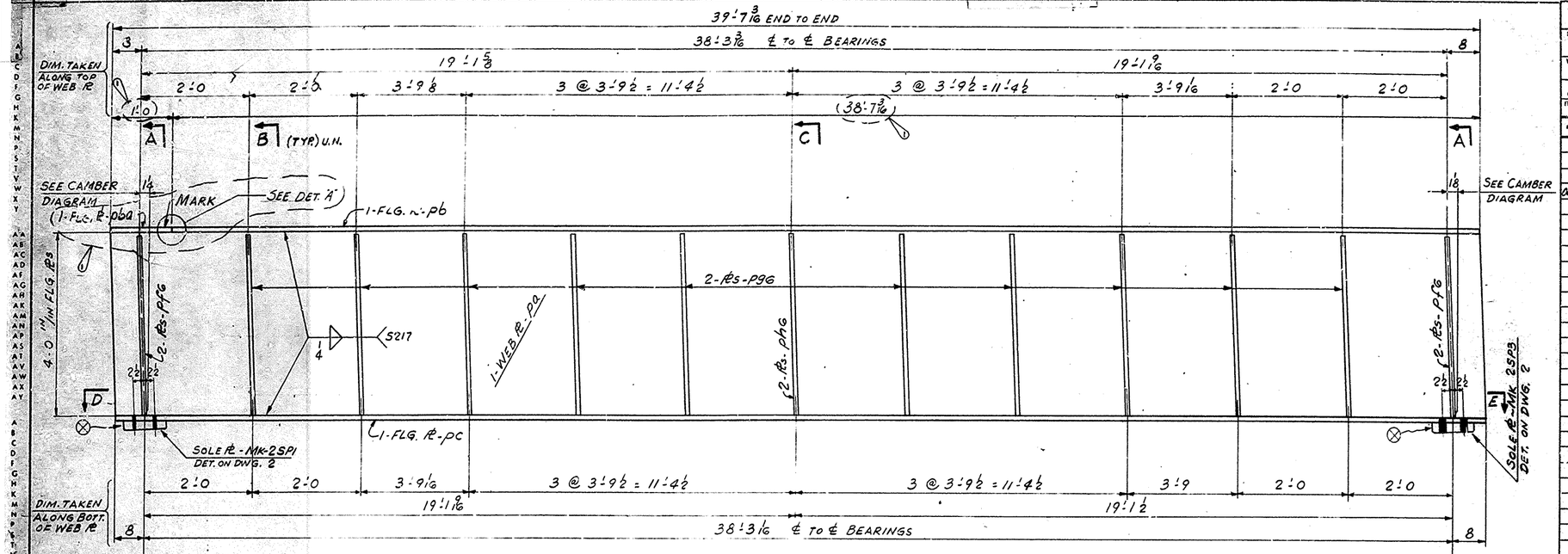

MAKE ONE GIRDER MK~7RB1

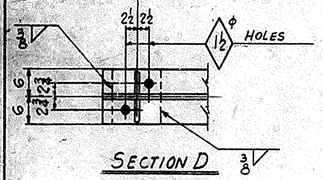

SECTION D

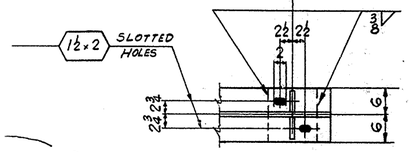

SECTION E

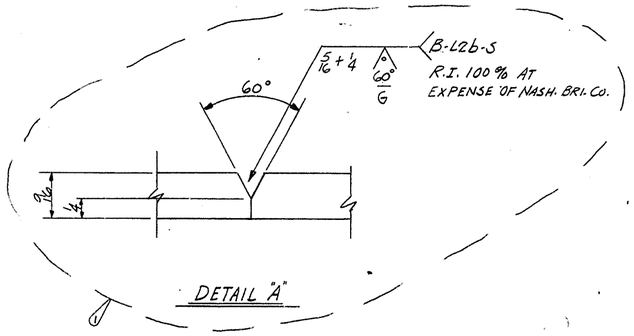

DETAIL "A"

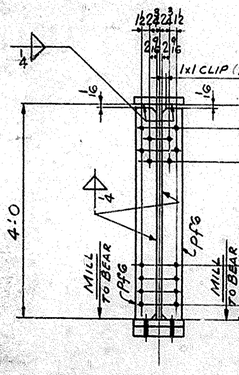

SECTION A

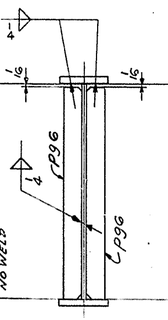

SECTION "B"

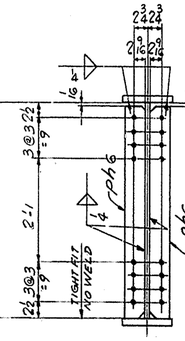

SECTION "C"

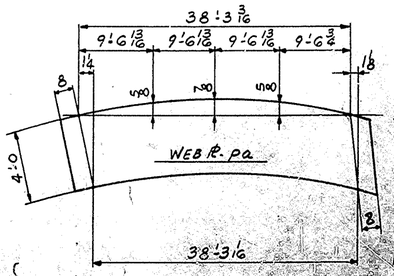

CAMBER DIAGRAM & WEB ℞ CUTTING SKETCH

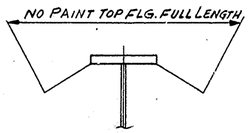

TYP. SECTION THRU TOP FLG

MATERIAL ASTM-A36
FOR GENERAL NOTES SEE DWG. GN1
⊗ INDICATES THICKER SIDE OF SOLE ℞

NASHVILLE BRIDGE COMPANY

SHOP ORDER NO. B 5725
WORK ORDER NO.
CONTRACT NO. C 6736

COMMONWEALTH OF KENTUCKY DEPT. OF HIGHWAYS, BRIDGE OVER NORTH WESTERN PARKWAY & 22ND ST. JEFFERSON COUNTY

BILL NO. 7
DRAWING NO. 7

FABRICATION BESSEMER PLANT

ITEM
WEIGHTS BY
CHECKED BY

SHIP	SHIPPING MARK	ITEM COUNT	ASSEMBLY MARK	MARKS	SECTION	FINISHED LENGTH FT	FINISHED LENGTH IN	DEVELOPED LENGTH FT	DEVELOPED LENGTH IN	P.O. NO.	ITEM NO.	REMARKS	SPECIF. WEIGHT	MASC WEIGHT
					MATERIAL ASTM-A36									
ONE	7RB1				GIRDER									
		1	pa	℞	48 3/8 × 3/8	39	8 5/16	49	4 3/8	3908	538			
		1	pb	℞	12 × 9/16	38	7 3/16	98 CUTS	8 1/8	3910	323			
		1	pc	℞	12 × 9/16	39	7 1/16	98 CUTS	8 1/8	3910	323			
		4	pfG	℞	5 1/2 × 1/2	3	11 5/16			3905	605	(MIE)		
		20	pgG	℞	4 × 3/8	3	11 5/16			3905	605	(FIE)		
		2	phG	℞	4 × 3/8	3	11 5/16			3905	605	(FIE)		
		1	pba	℞	12 × 9/16	1	0					STK		
		1	2SP1		SOLE ℞							DET. ON DWG. 2		
		1	2SP3		SOLE ℞									
					4 WELD	375 LF								
					3/8 WELD	4 LF								
												SHEET TOTAL		

APPROVED FOR SHOP: MWP 7/7/70 CHIEF DRAFTSMAN; CHIEF ENGINEER
REVISION NOTES: 5/4/70

GIRDER DETAILS - SPAN R4 - RAMP "A"
BRIDGE OVER NORTH WESTERN PARKWAY & 22ND ST.
DEPT. OF HIGHWAYS - COMMONWEALTH OF KENTUCKY
JEFFERSON COUNTY F.A.P. I-64-2(34)1; SP56-273 1L
CONTRACTOR: MATTINGLY BRIDGE CO.

NASHVILLE BRIDGE COMPANY
NASHVILLE, TENN.
BESSEMER PLANT

HOLES 15/16" OR NOTED; 13/16" OR NOTED
FIELD CONN. 7/8" H.S.B.
SHOP PAINT / FIELD: SEE GN1
DRAWN BY G.D. DATE 10-14-69
IN CHARGE: CATTI (TENSON)
CHECKED BY DATE 12/5/69
DATE PRINTED
BILL MATERIAL NO. 7
CONT. C 6736
S.O. B 5725
DRAWING NO. 7

BRIDGE

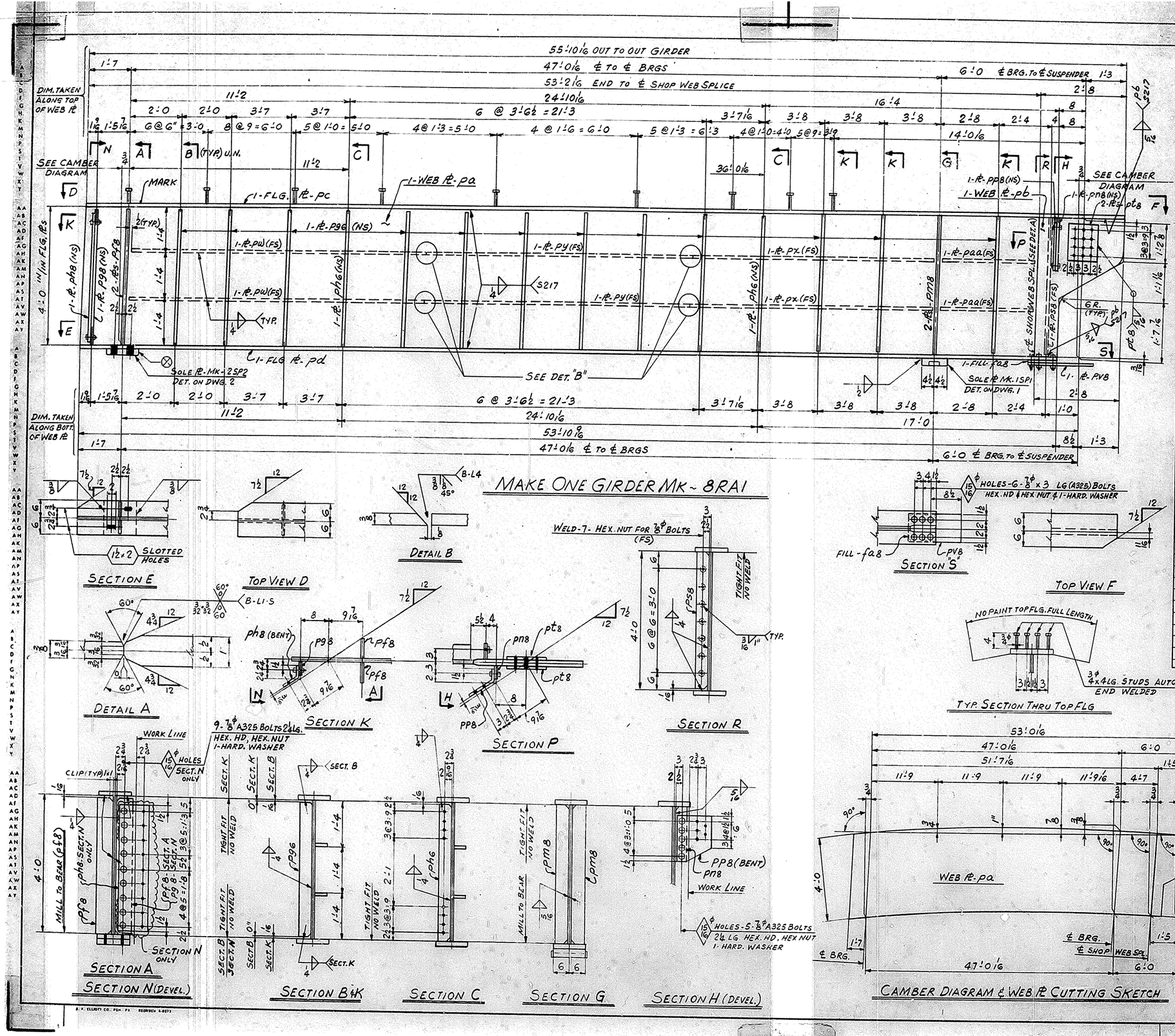

MATERIAL ASTM-A36 (U.N.)
FOR GENERAL NOTES SEE DWG. GN1
⊗ INDICATES THICKER SIDE OF SOLE ℞

17

NASHVILLE BRIDGE COMPANY

SHOP ORDER NO. B5725
WORK ORDER NO.
CONTRACT NO. CG736
ITEM

COMMONWEALTH OF KENTUCKY DEPT. OF HIGHWAYS, BRIDGE OVER NORTH WESTERN PARKWAY & 22ND ST. JEFFERSON COUNTY.

BILL NO. 8
DRAWING NO. 8

FABRICATION BESSEMER PLANT

WEIGHTS BY
CHECKED BY

SHIP	SHIPPING MARK	ITEM QUANT.	ASSEMBLY MARK	DWG.	SECTION	FINISHED LENGTH FT.	IN.	ORDERED LENGTH FT.	IN.	P.O. NO.	ITEM NO.	REMARKS	SPECIF. WEIGHT	A.I.S.C. WEIGHT
					MATERIAL ASTM-A36 (U.N.)									
ONE	BRA1				GIRDER									
		1	pa	℞	49 x 3/8	53	2 1/16	49+	53'-5	3908	592			
		1	pb	℞	48 1/2 x 1	2	8			3910	306	(℞-49 x 3/8 MATCH PCT LEA-PAT-PA.11)		
		1	pc	℞	12 x 9/16	55	10 1/16	BSL CUT 2 @ 1/2		3910	325			
		1	pd	℞	12 x 9/16	53	10 1/16	BSL CUT 2 @ 1/2		3910	327			
		2	pf8	℞	5 1/2 x 1/2	3	11 15/16			STK 3620	905	(MIE)		
		1	pg8	℞	4 x 3/8	3	11 15/16			3905	605	(FIE)		
		1	ph8	℞	7 3/8 x 3/8	3	7 1/2			STK 3740	410	(BENT)		
		12	pg6	℞	4 x 3/8	3	11 15/16			3905	605	(FIE)		
		2	ph6	℞	4 x 3/8	3	11 15/16			3905	605	(FIE)		
		2	pnB	℞	5 1/2 x 1	4	0			3910	303	(FIE) (MIE)		
		1	pnB	℞	4 x 3/8	1	6 1/2			3905	605			
		1	ppB	℞	10 1/16 x 3/8	1	3			STK 3740	410	(BENT)		
		1	psB	℞	4 x 3/8	3	11 15/16			3905	605	(FIE)		
		2	pt8	℞	11 x 1/2	1	0			STK 3620	905			
		1	pvB	℞	7 x 3/4	1	5			STK 2672	316			
		2	pw	℞	4 x 3/8	15	6 7/8			3905	605			
		2	py	℞	4 x 3/8	15	7 3/8				605			
		2	px	℞	4 x 3/8	15	7 1/4				605			
		2	paa	℞	4 x 3/8	4	5 1/2			3905	605			
		1	fa8	℞	7 x 9/16	0	10			STK 3620	501			
		6		Bol	7/8φ BOLTS	0	3			R.A. 3260 / 3660	201	A325 HEX HD HEX NUT		
		14		Bol	7/8φ BOLTS	0	2 1/4			R.E. 3260 / 3660	208	A325 HEX HD HEX NUT		
		20			HARD. WASHER FOR 7/8φ BOLTS					R.E. 3260 / 3660	209	A325		
		7			7/8φ NUTS					STK		A307 HEX.		
		168			3/4φ STUDS	0	4			R. 3660 / 2016	301	AUTO. END WELDED A108		
		1	2SP2		SOLE ℞							DET. ON DWG. 2		
		1	1SP1		SOLE ℞							DET. ON DWG. 1		
												SHEET TOTAL		

GIRDER DETAILS - SPAN R1 - RAMP "A"
BRIDGE OVER NORTHWESTERN PARKWAY & 22ND ST.
DEPARTMENT OF HIGHWAYS COMMONWEALTH OF KENTUCKY
JEFFERSON COUNTY F.A.P. IG4-2(84)1; SP56-273 ILL
CONTRACTOR MATTINGLY BRIDGE CO.

NASHVILLE BRIDGE COMPANY
NASHVILLE, TENN.
BESSEMER PLANT

APPROVED FOR SHOP
NMF 7/18/70 CHIEF DRAFTSMAN
CHIEF ENGINEER
REVISION NOTES
AAL. CHGE. 7/1/70

HOLES 15/16φ OR NOTED
FIELD CONN. 7/8φ H.S.B.
SHOP PAINT SEE DWG. GN1
FIELD

DRAWN BY G.D. DATE 10-15-69
IN CHARGE J. GATTI (JUNIOR)
CHECKED BY DATE 12/2/69
DATE PRINTED

BILL OF MATERIAL NO. 8
CONT. C6736
S.O. B5725
DRAWING NO. 8

BRIDGE

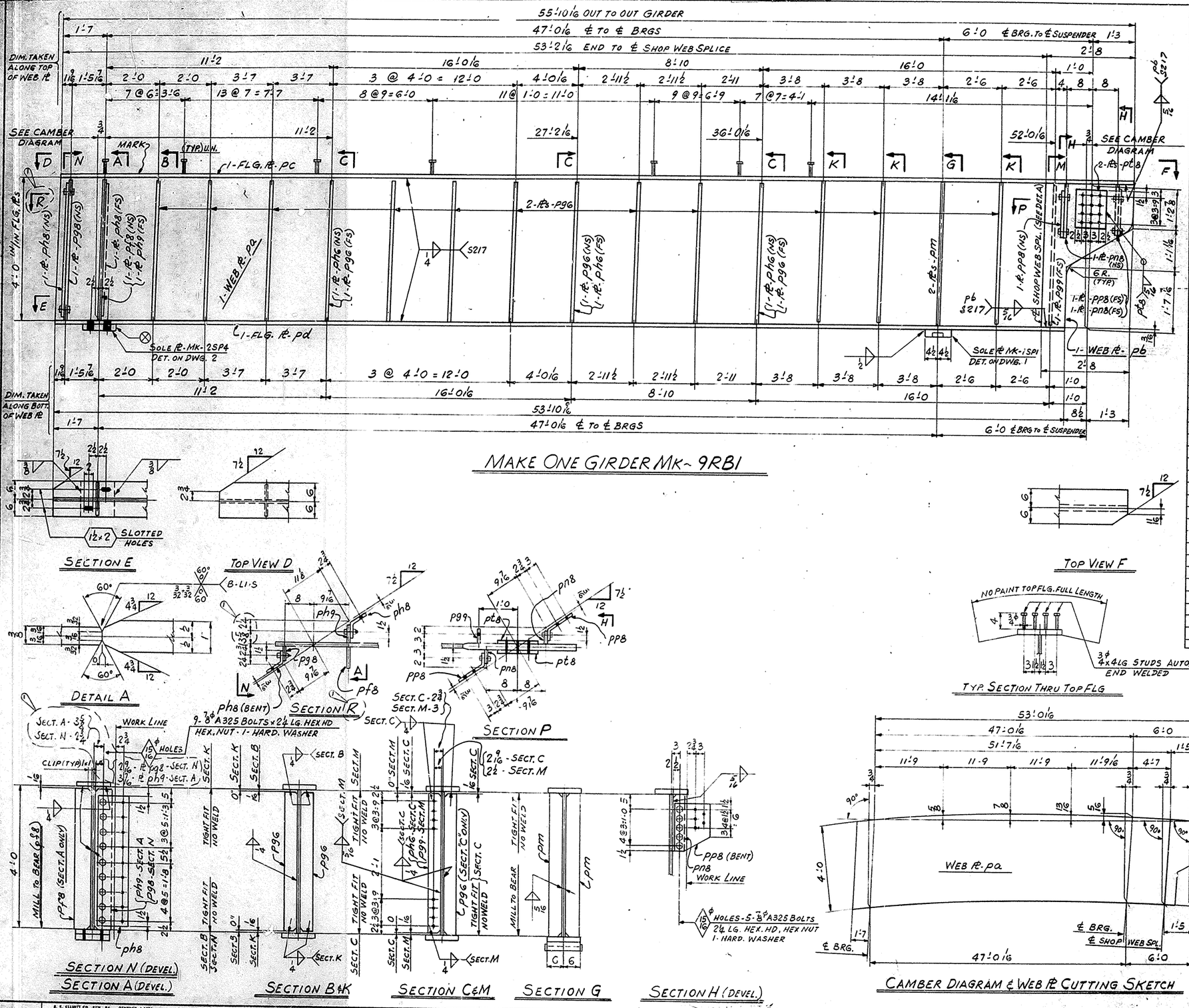

NASHVILLE BRIDGE COMPANY

SHOP ORDER NO. B5725
WORK ORDER NO.
CONTRACT NO. C6736

COMMONWEALTH OF KENTUCKY DEPT. OF HIGHWAYS, BRIDGE
OVER NORTH WESTERN PARKWAY & 22ND ST. JEFFERSON COUNTY.

FABRICATION BESSEMER PLANT

BILL NO. 9
DRAWING NO. 9

ITEM
WEIGHTS BY
CHECKED BY

SHIP	SHIPPING MARK	ITEM COUNT	ASSEMBLY MARK	MARK	SECTION	FINISHED LENGTH FT. IN.	OBTAINED LENGTH FT. IN.	P.O. NO.	ITEM NO.	REMARKS	SPECIF. W. JOINT	AVG. WEIGHT
					MATERIAL ASTM-A36 (U.N.)							
ONE 9RB1			GIRDER									
		1	pa	PL	48 7/8 x 3/8	53 2 1/16	49 1/4 x 53'-0	3908	532	PL 49 x 3'-5 MATCH CUT LEN. pb & pa12		110
		1	pb	PL	48 1/2 x 1	2 8		3910	306			2/11
		1	pc	PL	12 x 3/4	55 10 1/16	73 3/4 CUTS 6 @ 1/2	3910	316			2/12
		1	pd	PL	12 x 3/4	53 10 1/16	73 3/4 CUTS 6 @ 1/2	3910	314			2/15
		2	ph8	PL	7 7/8 x 3/8	3 7 1/2		57K 3720	410	(BENT)		2/19
		1	pg8	PL	4 x 3/8	3 11 1/16		3905	605	(FIE)		2/21
		1	pf8	PL	5 1/2 x 1/2	3 11 1/2		57K 3780	405	(MIE)		2/18
		1	ph9	PL	5 1/2 x 1/2	3 11 1/2		57K 3780	405	(MIE)		2/14
		25	pg6	PL	4 x 3/8	3 11 1/2		3905	605	(FIE)		2/31
		3	ph6	PL	4 x 3/8	3 11 1/16		3905	605	(FIE)		2/19
		2	pm	PL	5 1/2 x 11/16	4 0		3910	236	(FIE)/(MIE)		2/37
		1	pg9	PL	4 x 3/8	3 11 1/2		3905	605	(FIE)		2/31
		2	pp8	PL	10 1/16 x 3/8	1 3		57K 3780	410	(BENT)		2/33
		2	pn8	PL	4 x 3/8	1 6 1/2		3905	605			2/32
		2	pt8	PL	11 x 1/2	1 0		57K 3680	405			2/15
		28			7/8 ϕ BOLTS	0 2 1/4		REQ. 7869 26661	202	A325 HEX. HD HEX NUT		✓
		28			HARD. WASHERS FOR 7/8 ϕ BOLTS			REQ. 7869 26661	205	A325		✓
		224			3/4 ϕ STUDS	0 4		27120	301	AUTO. END WELDED AIOA		✓
		1	1SP1		SOLE PL					DET. ON DWG. 1		
		1	2SP4		SOLE PL					DET. ON DWG. 2		

SHEET TOTAL

E. K. ELLIOTT CO., KDM, PA. REORDER A-8573

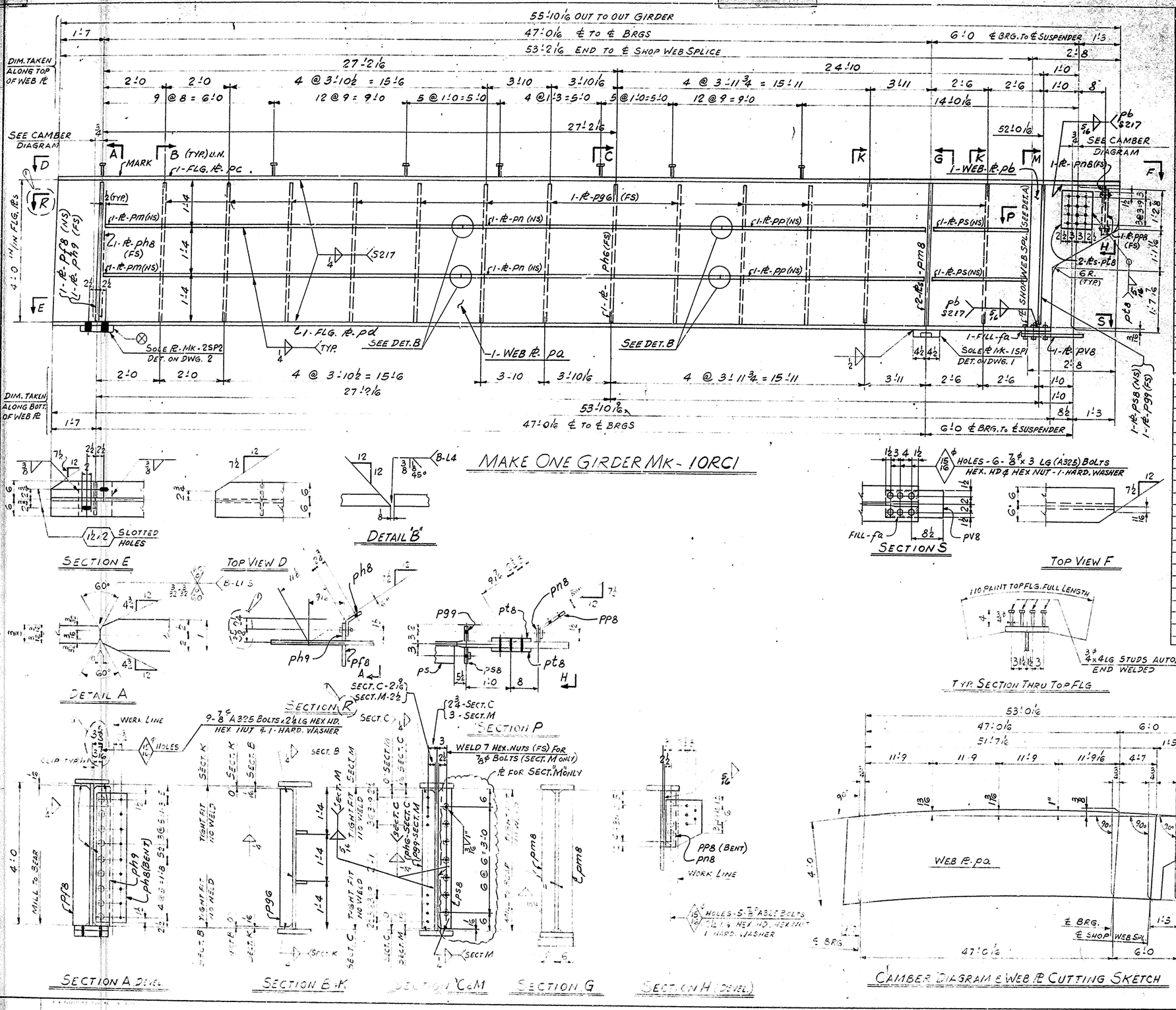

MAKE ONE GIRDER MK-10RCI

MATERIAL ASTM-A36
FOR GENERAL NOTES SEE DWG. GN1
(.) INDICATES THICKER SIDE OF SOLE PL

NASHVILLE BRIDGE COMPANY

SHOP ORDER NO. B5725
WORK ORDER NO.
CONTRACT NO. C6736

COMMONWEALTH OF KENTUCKY DEPT. OF HIGHWAYS, BRIDGE OVER NORTH WESTERN PARKWAY & 22ND ST. JEFFERSON COUNTY.

FABRICATION BESSEMER PLANT

BILL NO. 10 DRAFTING NO. 10

ITEM WEIGHS BY CHECKED BY

SHOP	EMPIRICAL MARK	ITEM COUNT	ASSEMBLY MARK	SHAPE	SECTION	FINISHED LENGTH FT. IN.	OPERATED LENGTH FT. IN.	P.O. NO.	ITEM NO.	REMARKS	SPECIF. WEIGHT	A.I.S.C. WEIGHT
					MATERIAL ASTM-A36 (U.N.)							
ONE	10RCI				GIRDER							
		1	pa	PL	49 9/16 x 3/8	53 6 1/2	49 1/2	53'-5	3908	302	PL 49 x 3/8 MATCH CUT LEN. pb, pd, pa13	2/11
		1	pb	PL	48 1/2 x 1	2 8			3910	300		2/12
		1	pc	PL	12 x 5/8	55 10 1/2	78 1/2 CUTS	6'-12	3910	320		2/13
		1	pd	PL	12 x 5/8	55 10 1/2	85 1/2 CUTS	7'-12	3910	317		2/12
		1	pf8	PL	5 1/2 x 1/2	3 11 15/16			STK 3680	405	(MIE)	2/19
		1	ph9	PL	5 1/2 x 1/2	3 11 15/16			STK 2680	405	(MIE)	2/20
		1	ph8	PL	7 7/8 x 3/8	3 7 1/2			STK 3740	410	(BENT)	2/14
		12	pg6	PL	4 x 3/8	3 11 15/16			3905	605	(FIE)	2/21
		1	ph6	PL	4 x 3/8	3 11 15/16			3905	605	(FIE)	2/24
		2	pm8	PL	5 1/2 x 1	4 0			3910	308	(FIE) (MIE)	2/20
		1	ps8	PL	4 x 3/8	3 11 15/16			3905	605	(FIE)	2/21
		1	pg9	PL	4 x 3/8	3 11 15/16			3905	605	(FIE)	2/21
		1	pp8	PL	10 1/2 x 3/8	1 3			STK 3740	410	(BENT)	2/22
		1	pn8	PL	4 x 3/8	1 6 1/2			3905	605		2/22
		2	pt8	PL	11 x 1/2	1 0			STK 3680	405		2/15
		1	pv8	PL	7 x 3/4	1 5			STK 2674	316		2/15
		2	pm	PL	4 x 3/8	15 6 1/8			3905	605		2/19
		2	pn	PL	4 x 3/8	15 7 3/8			3905	605		2/19
		2	pp	PL	4 x 3/8	15 7 1/4			3905	605		2/25
		2	ps	PL	4 x 3/8	4 5 1/2			3905	605		2/26
		1	fa	PL	7 x 1/4	0 10			STK 3470	602		2/31
		14			7/8 ϕ A325 BOLTS	0 2 1/4			26001	202	HEX HD HEX NUT (A325)	✓
		6			7/8 ϕ A325 BOLTS	0 3				201	HEX HD HEX NUT (A325)	✓
		20			HARD. WASHERS FOR 7/8 ϕ H.S.B.					203	A325	✓
		7			7/8 ϕ NUTS					STK	(A307) HEX.	✓
		192			3/4 ϕ STUDS	0 4			27120	301	AUTO-END WELDED A108	
		1	1SP1		SOLE PL						DET. ON DWG. 1	
		1	2SP2		SOLE PL						DET. ON DWG. 2	
											SHEET TOTAL	

19

GIRDER DETAILS - SPAN R1 - RAMP 'A'
BRIDGE OVER NORTHWESTERN PARKWAY & 22ND ST.
DEPARTMENT OF HIGHWAYS COMMONWEALTH OF KENTUCKY
JEFFERSON COUNTY F.A.P. I 64-2(36) : SP56 273 11L
CONTRACTOR MATTINGLY BRIDGE CO.

NASHVILLE BRIDGE COMPANY
NASHVILLE, TENN.
BESSEMER PLANT

APPROVED FOR SHOP
WLF 7/21/70 CHIEF DRAFTSMAN
WRC 7/21/70 CHIEF ENGINEER
REVISION NOTES
APPL. CHGE. 2/10/70
4/23/70

HOLES 15/16 P OR NOTED
FIELD CONN. 7/8 H.S.B.
SHOP PAINT SEE DWG GN1
FIELD

DRAWN BY G.D. DATE 10-16-69
(IN CHARGE, GATTI FERGUSON)
CHECKED BY DATE 12/2/69
DATE PRINTED

FIELD MATERIAL NO. 10
CONT. C6736
S.O. B5725
DRAWING NO. 10

BRIDGE

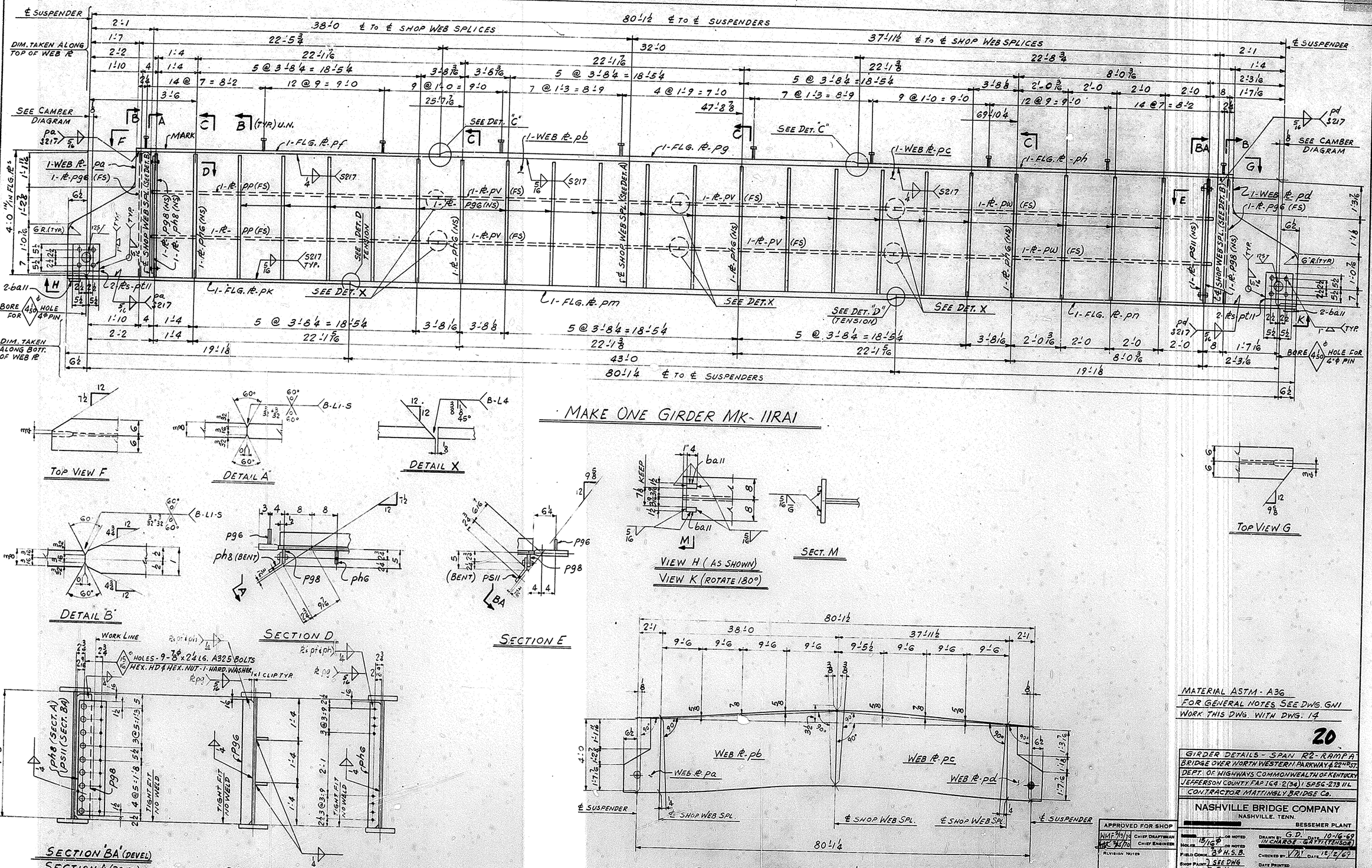

MAKE ONE GIRDER MK-11RA1

TOP VIEW F

DETAIL A

DETAIL X

VIEW H (AS SHOWN)
VIEW K (ROTATE 180°)

SECT. M

TOP VIEW G

DETAIL B

SECTION D

SECTION E

CAMBER DIAGRAM & WEB PL CUTTING SKETCH

SECTION 'BA' (DEVEL)
SECTION A (DEVEL.)
SECTION B
SECTION C

MATERIAL ASTM - A36
FOR GENERAL NOTES SEE DWG. GN1
WORK THIS DWG. WITH DWG. 14

20

GIRDER DETAILS - SPAN R2 - RAMP A
BRIDGE OVER NORTH WESTERN PARKWAY & 22ND ST.
DEPT. OF HIGHWAYS COMMONWEALTH OF KENTUCKY
JEFFERSON COUNTY FAP 164-2(34) I SP56-273 IL
CONTRACTOR MATTINGLY BRIDGE Co.

NASHVILLE BRIDGE COMPANY
NASHVILLE, TENN.
BESSEMER PLANT

Holes	15/16ø or noted
Field Conn.	3/4ø H.S.B.
Shop Paint	SEE DWG
Field	GN1
Drawn by	G.D. Date 10-16-69
In charge	GATT (TENSOR)
Checked by	VM Date 12/2/69
Date Printed	

APPROVED FOR SHOP
NMF 7/19/70 Chief Draftsman
MC 7/16/70 Chief Engineer
Revision Notes
Appl. Chge. 7/10/70

Bills Material No.	Cont.	Drawing No.
11	C6736	11
	S.O. B5725	

BRIDGE

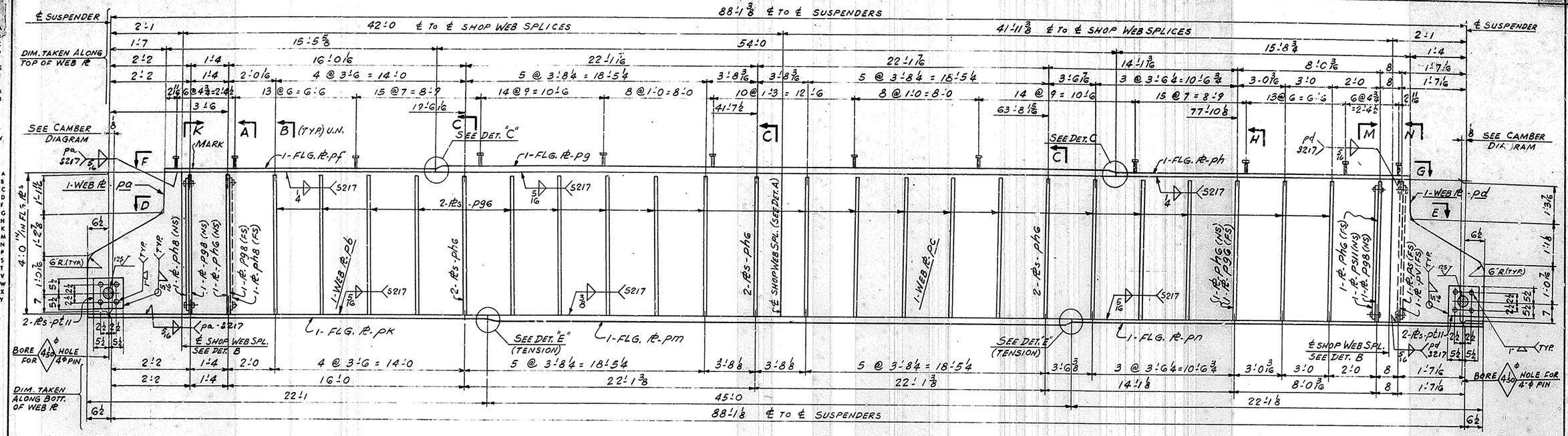

MAKE ONE GIRDER MK-12RB1

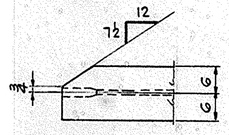
TOP VIEW F

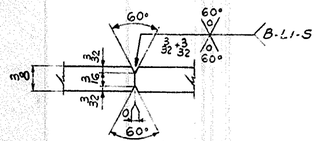
DETAIL A

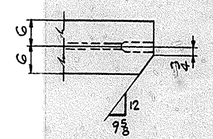
TOP VIEW G

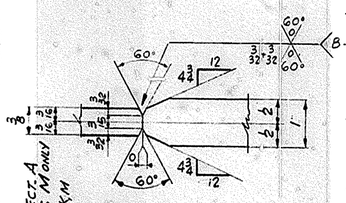
DETAIL "B"

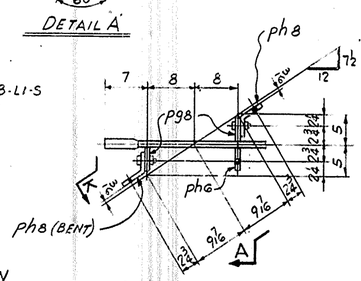
SECTION D

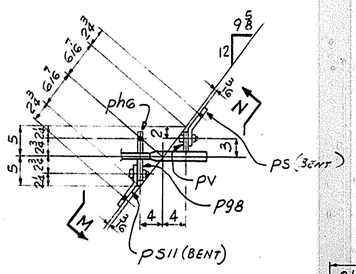
SECTION E

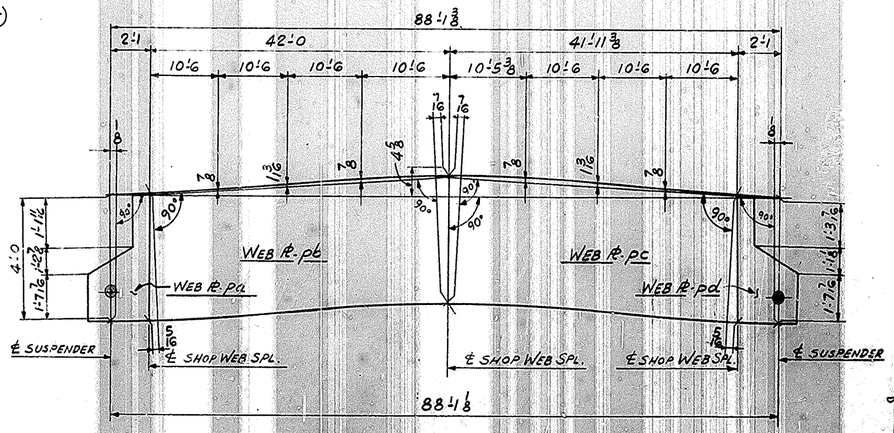
CAMBER DIAGRAM & WEB PL CUTTING SKETCH

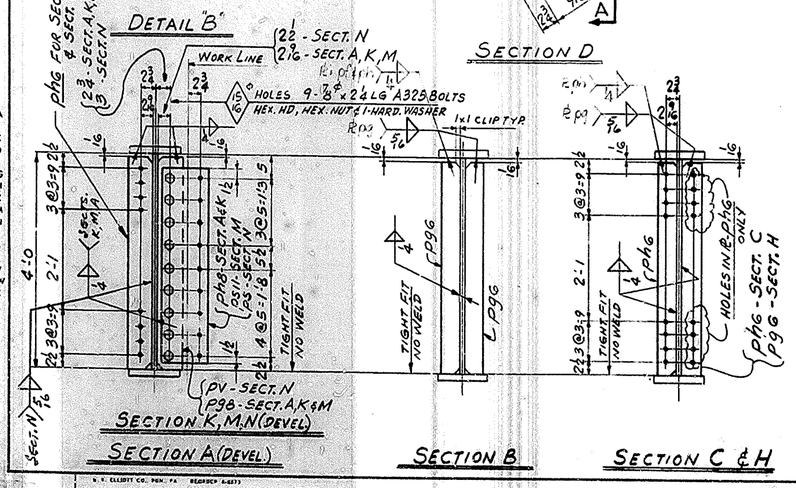
SECTION A (DEVEL)

SECTION B

SECTION C & H

MATERIAL ASTM - A36
FOR GENERAL NOTES SEE DWG. GN1
WORK THIS DWG. WITH DWG. 14

21

GIRDER DETAILS - SPAN R2 - RAMP P-A
BRIDGE OVER NORTH WESTERN PARKWAY & 22ND ST.
DEPT. OF HIGHWAYS COMMONWEALTH OF KENTUCKY
JEFFERSON COUNTY FAP 164-2(34) I SP 56-273 I.L.
CONTRACTOR MATTINGLY BRIDGE CO.

NASHVILLE BRIDGE COMPANY
NASHVILLE, TENN.
BESSEMER PLANT

APPROVED FOR SHOP
CHIEF DRAFTSMAN
CHIEF ENGINEER
REVISION NOTES
APPL. CHGS. 8/2/70

DRAWN BY G.D. DATE 10-17-69
IN CHARGE - GATTI (FINISH)
CHECKED BY DATE 12/2/69
DATE PRINTED

BILL MATERIAL NO. 12
CONT. C6736
S.C. B5725
DRAWING NO. 12

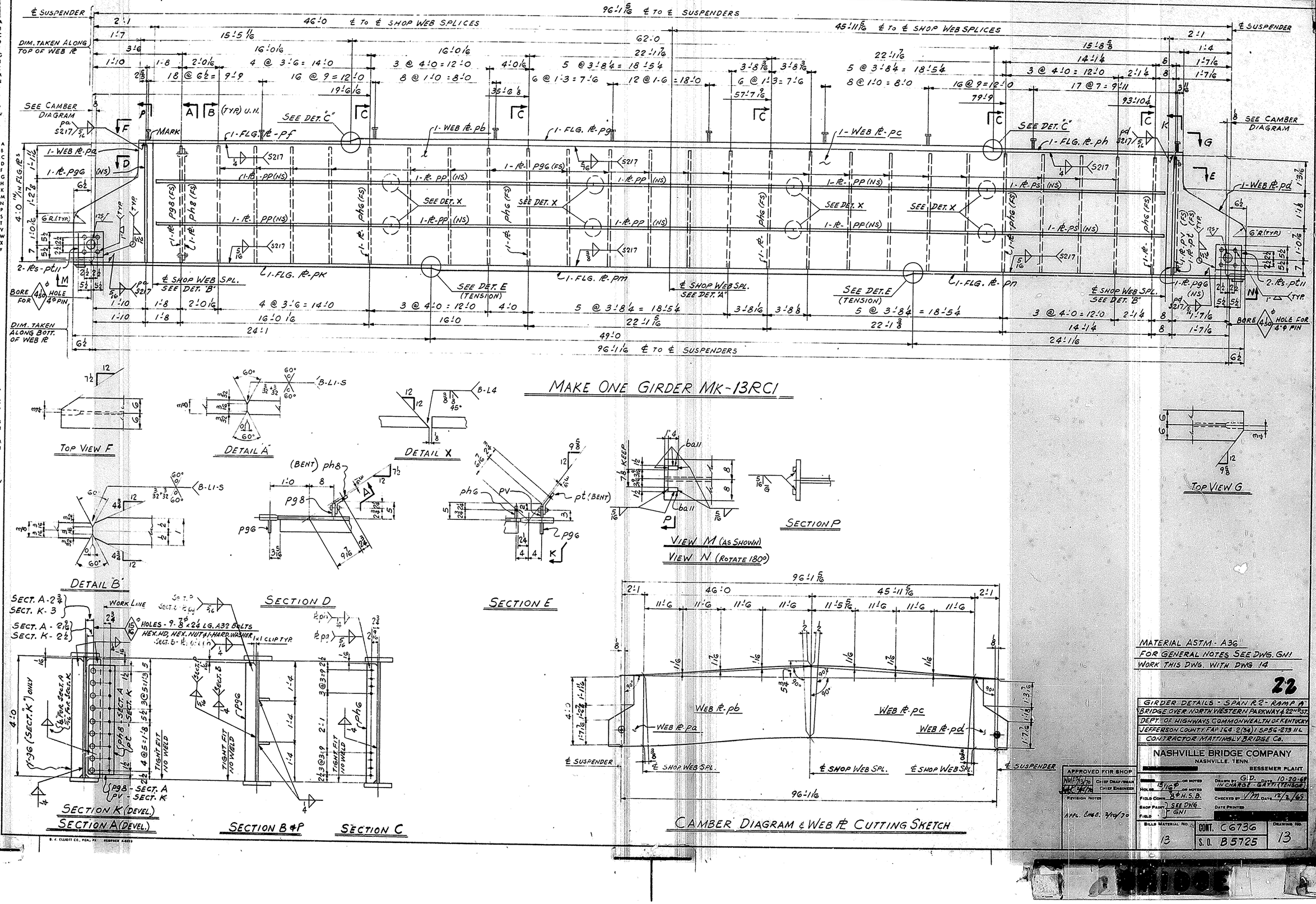
MAKE ONE GIRDER MK-13RC1
TOP VIEW F
DETAIL A
DETAIL X
TOP VIEW G
DETAIL B
SECTION D
SECTION E
VIEW M (AS SHOWN)
VIEW N (ROTATE 180°)
SECTION P
SECTION K (DEVEL.)
SECTION A (DEVEL.)
SECTION B & P
SECTION C
CAMBER DIAGRAM & WEB PL CUTTING SKETCH
MATERIAL ASTM - A36
FOR GENERAL NOTES SEE DWG. GN1
WORK THIS DWG. WITH DWG 14
22
GIRDER DETAILS - SPAN R2 - RAMP A
BRIDGE OVER NORTH WESTERN PARKWAY & 22ND ST.
DEPT. OF HIGHWAYS COMMONWEALTH OF KENTUCKY
JEFFERSON COUNTY FAP 164-2(34) I SP56-219 11L
CONTRACTOR MATTINGLY BRIDGE Co.
NASHVILLE BRIDGE COMPANY
NASHVILLE, TENN.
BESSEMER PLANT
APPROVED FOR SHOP
CHIEF DRAFTSMAN
CHIEF ENGINEER
REVISION NOTES
DRAWN BY G.D. DATE 10-20-69
IN CHARGE - GATTI (TENSOR)
CHECKED BY DATE 12/2/69
DATE PRINTED
BILLS MATERIAL NO. 13
CONT. C6736
S.O. B5725
DRAWING NO. 13

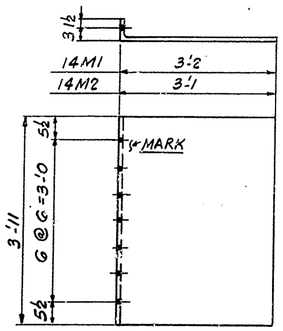

MAKE 2 PLATES MK-14M1
MAKE 2 PLATES MK-14M2 } BENT

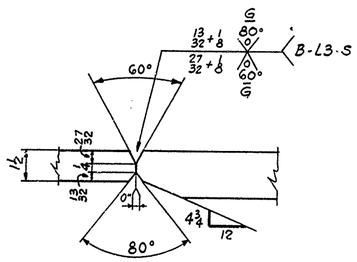

DETAIL E
(FOR 12RB1 & 13RC1 ONLY)

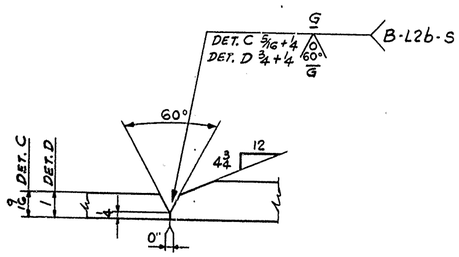

DETAIL "C"
DETAIL "D" (FOR 11RA1 ONLY)

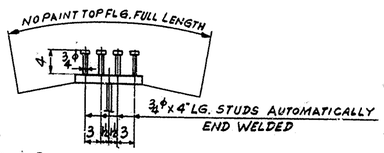

TYP. SECTION THRU TOP FLG.

NASHVILLE BRIDGE COMPANY

SHOP ORDER NO. B5725 | WORK ORDER NO. C6736 | CONTRACT NO.

COMMONWEALTH OF KENTUCKY DEPT. OF HIGHWAYS
BRIDGE OVER NORTHWESTERN PARKWAY & 22ND ST. JEFFERSON COUNTY

BILL NO. 11 | DRAWING NO. 11

FABRICATION BESSEMER PLANT

ITEM																		
SHIP	SHIPPING MARK	ITEM QUANT	ASSEMBLY MARK	SHAPE	SECTION	FINISHED LENGTH FT IN	ORDERED LENGTH FT IN	P.O. NO.	ITEM NO.	REMARKS	SPECIF. WEIGHT	A.I.S.C. WEIGHT	
					MATERIAL ASTM-A36 (U.N.)								
ONE	11RA1				GIRDER								
		1	pa	PL	31½×1	4 0¾		3910	304	PL 49×3'-5 MATCH CUT 1 EA. pa & pb8			3/12
		1	pb	PL	48⅞×⅜	38 0¼	49¼×38'-2	3908	536				3/2
		1	pc	PL	48⅞×⅜	37 11¾	49¼×38'-2	3908	535	PL 49×3'-3 MATCH CUT 1 EA. pd & pb15			3/2
		1	pd	PL	31½×1	4 0¼		3910	304				4/12
		1	pf	PL	12×1 9/16	22 5⅝	73½ CUTS 6@12	3910	331				3/5
		1	pg	PL	12×1 13/16	32 0		3910	311				3/6
		1	ph	PL	12×1 9/16	22 8¾	73½ CUTS 6@12	3910	331				3/7
		1	pk	PL	16×1	19 1⅛		3910	305				3/8
		1	pm	PL	16×1½	43 0	48½ CUTS 3@16	3910	223				3/9
		1	pn	PL	16×1	19 1⅛		3910	305				3/18
		4	pt11	PL	11×⅜	0 11		3909	409				3/19
		20	pg6	PL	4×⅜	3 11 15/16		3905	605	FIE			3/20
		2	pg8	PL	4×⅜	3 11 15/16		3905	605	FIE			3/20
		1	ph8	PL	7⅞×⅜	3 7½		STK 3740	410	BENT			3/21
		4	ph6	PL	4×⅜	3 11 15/16		3905	605	FIE			3/20
		1	ps11	PL	7 15/16×⅜	3 7½		STK 3740	410	BENT			3/21
		2	pp	PL	4×⅜	19 1½		3905	605				3/22
		4	pv	PL	4×⅜	20 0		3905	605				3/22
		2	pw	PL	4×⅜	15 10½		3905	615				3/23
		4	ba11	Bar	1½×1	0 4		3910	305				3/25
		18			⅞φ A325 Bolts HARD WASHERS FOR ⅞φ H.S.B.	0 2¼		266611 } 203	202	HEX. HD & HEX. NUT (A325) (A325)			
		356			¾φ STUDS	0 4		271120	301	AUTO. END WELDED A108			
2	14M1	2		PL	47×4	3 6		STK 3470	602	BENT			3/27
2	14M2	2		PL	47×4	3 5		STK 3470	602	BENT			3/27

SHEET TOTAL

NASHVILLE BRIDGE COMPANY

SHOP ORDER NO. B5725 | WORK ORDER NO. | CONTRACT NO. C6736

COMMONWEALTH OF KENTUCKY DEPT. OF HIGHWAYS
BRIDGE OVER NORTHWESTERN PARKWAY & 22ND ST. JEFFERSON COUNTY

BILL NO. 12 | DRAWING NO. 12

FABRICATION BESSEMER PLANT

ITEM																		
SHIP	SHIPPING MARK	ITEM QUANT	ASSEMBLY MARK	SHAPE	SECTION	FINISHED LENGTH FT IN	ORDERED LENGTH FT IN	P.O. NO.	ITEM NO.	REMARKS	SPECIF. WEIGHT	A.I.S.C. WEIGHT	
					MATERIAL ASTM-A36 (U.N.)								
ONE	12RB1				GIRDER								
		1	pa	PL	31½×1	4 0¾		3910	304	PL 49×3'-5 MATCH CUT 1 EA. pa & pb9			3/12
		1	pb	PL	49 7/16×⅜	42 0 5/16	49¼×42'-2	3908	524				3/3
		1	pc	PL	49 7/16×⅜	41 11 11/16	49¼×42'-2	3908	524				3/3
		1	pd	PL	31½×1	4 0¼		3910	304	PL 49×3'-3 MATCH CUT 1 EA. pd & pb16			3/12
		1	pf	PL	12×9/16	15 5⅝	73½ CUTS 6@12	3910	324				3/10
		1	pg	PL	12×1¼	54 0		3910	230				3/16
		1	ph	PL	12×9/16	15 8¾	73½ CUTS 6@12	3910	324				3/10
		1	pk	PL	16×1½	22 1	65 CUTS 4@16	3910	222				3/22
		1	pm	PL	16×2 13/16	45 0	32½ CUTS 2@16	3910	211				3/13
		1	pn	PL	16×1½	22 1 5/16	65 CUTS 4@16	3910	222				3/22
		3	pg8	PL	4×⅜	3 11 15/16		3905	605	FIE			3/20
		2	ph8	PL	7⅞×⅜	3 7½		STK 3740	410	BENT			3/21
		1	ps11	PL	7 15/16×⅜	3 7½		STK 3740	410	BENT			3/21
		4	pt11	PL	11×⅜	0 11		3909	409				3/19
		9	ph6	PL	4×⅜	3 11 15/16		3905	605	FIE			3/20
		39	pg6	PL	4×⅜	3 11 15/16		3905	605	FIE			3/20
		1	ps	PL	7 15/16×⅜	3 7½		STK 3740	410	BENT			3/21
		1	pv	PL	4×⅜	3 11 15/16		3905	605	FIE			3/20
		36			⅞φ A325 Bolts HARD WASHERS FOR ⅞φ H.S.B.	0 2¼		266611 } 203	202	HEX. HD & HEX. NUT (A325) (A325)			
		396			¾φ STUDS	0 4		271120	301	AUTO. END WELDED A108			

SHEET TOTAL

NASHVILLE BRIDGE COMPANY

SHOP ORDER NO. B5725 | WORK ORDER NO. | CONTRACT NO. C6736

COMMONWEALTH OF KENTUCKY DEPT. OF HIGHWAYS
BRIDGE OVER NORTHWESTERN PARKWAY & 22ND ST. JEFFERSON CO.

BILL NO. 13 | DRAWING NO. 13

FABRICATION BESSEMER PLANT

ITEM																		
SHIP	SHIPPING MARK	ITEM QUANT	ASSEMBLY MARK	SHAPE	SECTION	FINISHED LENGTH FT IN	ORDERED LENGTH FT IN	P.O. NO.	ITEM NO.	REMARKS	SPECIF. WEIGHT	A.I.S.C. WEIGHT	
					MATERIAL ASTM-A36 (U.N.)								
ONE	13RC1				GIRDER								
		1	pa	PL	31½×1	4 0¾		3910	304	PL 49×3'-5 MATCH CUT 1 EA. pa & pb10			3/12
		1	pb	PL	49 7/16×⅜	46 0¾	49¼×46'-2	3908	599				5/4
		1	pc	PL	49 7/16×⅜	45 11¾	49¼×46'-2	3908	598				3/12
		1	pd	PL	31½×1	4 0¼		3910	304	PL 49×3'-3 MATCH CUT 1 EA. pd & pb17			3/12
		1	pf	PL	12×9/16	15 5 11/16	73½ CUTS 6@12	3910	324				3/14
		1	pg	USM	12×1⅜	62 0	12×62'-2	3910	225				3/15
		1	ph	PL	12×9/16	15 8¾	73½ CUTS 6@12	3910	324				3/14
		1	pk	PL	16×1½	22 1	65 CUTS 4@16	3910	222				3/16
		1	pm	PL	16×2 13/16	49 0	32½ CUTS 2@16	3910	211				3/17
		1	pn	PL	16×1½	22 1 5/16	65 CUTS 4@16	3910	222				3/16
		4	pt11	PL	11×⅜	0 11	73½ CUTS 2@11	3909	409				3/19
		22	pg6	PL	4×⅜	3 11 15/16		3905	605	FIE			3/20
		1	pg8	PL	4×⅜	3 11 15/16		3905	605	FIE			3/20
		1	ph8	PL	7⅞×⅜	3 7½		STK 3740	410	BENT			3/21
		1	pt	PL	7 15/16×⅜	3 7½		STK 3740	410	BENT			3/21
		5	ph6	PL	4×⅜	3 11 15/16		3905	605	FIE			3/20
		8	pp	PL	4×⅜	20 0		3905	605				3/22
		2	ps	PL	4×⅜	11 10 1/16		3905	605				3/24
		4	ba11	PL	1½×1	0 4		3910	305				3/25
		1	pv	PL	4×⅜	3 11 15/16		3905	605	(FIE)			3/20
		18			⅞φ A325 Bolts HARD WASHERS FOR ⅞φ H.S.B.	0 2¼		266611 } 203	202	HEX. HD & HEX. NUT (A325) A325			
		432			¾φ STUDS	0 4		271120	301	AUTO. END WELDED A108			

SHEET TOTAL

23

WORK THIS DWG WITH DWGS. 11, 12, 13

FOR GENERAL NOTES SEE DWG GN1
MATL ASTM A36 (UN)

APPROVED FOR SHOP
WMF 7/13/72 CHIEF DRAFTSMAN
CHIEF ENGINEER
REVISION NOTES

GIRDER DETAILS - SPAN R2 - RAMP A
BRIDGE OVER NORTH WESTERN PARKWAY & 22ND ST.
DEPT. OF HIGHWAYS COMMONWEALTH OF KENTUCKY
JEFFERSON COUNTY FAP 164-2(34) I SR 86-273-11
CONTRACTOR MATTINGLY BRIDGE CO.

NASHVILLE BRIDGE COMPANY
NASHVILLE, TENN. BESSEMER PLANT

SCALE | DRAWN BY G.D. DATE 10-21-69
HOLES 15/16φ OR NOTED | IN CHARGE
FIELD CONN. ⅞φ H.S.B. | CHECKED BY | DATE 12/2/69
SHOP PAINT } SEE GN1 | DATE PRINTED
FIELD

BILL MATERIAL NO. 11, 12, 13 | CONT. C6736 | S.O. B5725 | DRAWING NO. 14

BRIDGE

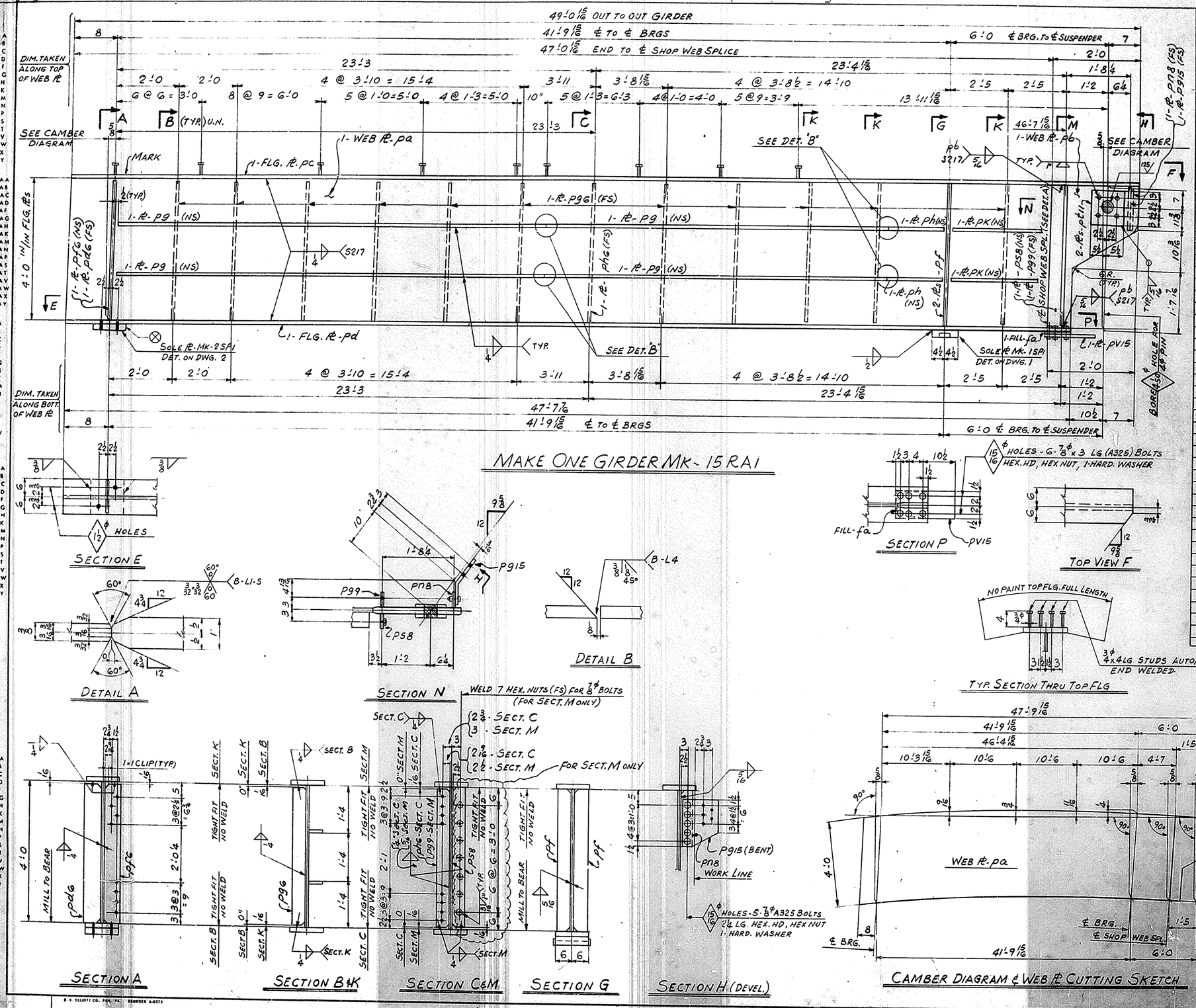

NASHVILLE BRIDGE COMPANY

SHOP ORDER NO. B5725 | WORK ORDER NO. | CONTRACT NO. CG736 | ITEM

COMMONWEALTH OF KENTUCKY DEPT. OF HIGHWAYS, BRIDGE OVER NORTH WESTERN PARKWAY & 22ND ST. JEFFERSON COUNTY.

FABRICATION BESSEMER PLANT

BILL NO. 15 | DRAWING NO. 15

WEIGHTS BY | CHECKED BY

SHOP	SHIPPING MARK	ITEM QUANT.	ASSEMBLY MARK	SHAPE	SECTION	FINISHED LENGTH FT. IN.	ORDERED LENGTH FT. IN.	P.O. NO.	ITEM NO.	REMARKES	SPECIF. WEIGHT	A.I.S.C. WEIGHT
					MATERIAL ASTM-A36 (U.N.)							
ONE	15RA				GIRDER							
		1	pa	℞	48 3/4 x 3/8	47 1 7/16	49 x 47'-5	3938	536			4/2
		1	pb	℞	48 1/2 x 1	2 0		3910	304	℞ 48 1/2 x 3/4 MACH. CUT. 1-℞ pb4 pd11		2/1
		1	pc	℞	12 x 7/16	49 0 1/2	7 3/4 CUTS 6 & 11	3910	332			9/1
		1	pd	℞	12 x 7/16	47 7 7/16	7 3/4 CUTS 6 & 11	3910	332			8/1
		1	pf6	℞	5 1/2 x 1/2	3 11 1/2		STK 3625	405	(MIE)		4/12
		1	pd6	℞	5 1/2 x 1/2	3 11 1/2		STK 3625	405	(MIE)		4/12
		11	pg6	℞	4 x 3/8	3 11 1/2		3905	605	(FIE)		4/13
		1	ph6	℞	4 x 3/8	3 11 1/2		3905	605	(FIE)		4/13
		2	pf	℞	5 1/2 x 13/16	4 0		3910	311	(MIE) (FIE)		8/15
		1	pg9	℞	4 x 3/8	3 11 1/2		3905	605	(FIE)		4/13
		1	ps8	℞	4 x 3/8	3 11 1/2		3905	605	(FIE)		4/13
		1	pn8	℞	4 x 3/8	1 6 1/2		3905	605			4/17
		1	pg15	℞	13 1/2 x 3/8	1 3		STK 3240	410	BENT		4/18
		4	pg	℞	4 x 3/8	20 0		3905	605			4/22
		2	ph	℞	4 x 3/8	1 8		3905	605			4/23
		2	pk	℞	4 x 3/8	4 5 9/16		3905	605			4/24
		1	pv15	℞	7 x 3/4	1 7		STK 3874	316			9/30
		2	pc11	℞	11 x 3/8	0 11	90 CUTS 8 & 11	3909	409			9/14
		1	fa	℞	7 x 5/16	0 10		STK 2873	601			8/31
		5			7/8⌀ H.S. BOLTS	0 2 1/2		26661	201	(A325) HEX HEAD HEX NUT		✓
		6			7/8⌀ H.S. BOLTS	0 3		26661	201	(A325) HEX HEAD HEX NUT		✓
		7			7/8⌀ NUTS				STK	HEX. A307		
		11			HARD. WASHER FOR 7/8⌀ H.S.B.			26661	203	(A325)		✓
		156			3/4⌀ STUDS	0 4		27120	301	AUTO. END WELDED A108		✓
		1	2SPI		SOLE ℞					DET. ON DWG. 2		
		1	1SPI		SOLE ℞					DET. ON DWG. 1		
										SHEET TOTAL		

MATERIAL ASTM-A36
FOR GENERAL NOTES SEE DWG. GN1
⊗ INDICATES THICKER SIDE OF SOLE ℞

24

GIRDER DETAILS - SPAN R3 - RAMP "A"
BRIDGE OVER NORTHWESTERN PARKWAY & 22ND ST.
DEPARTMENT OF HIGHWAYS COMMONWEALTH OF KENTUCKY
JEFFERSON COUNTY F.A.P. IG4-2(34)1; SP 56-273 1IL
CONTRACTOR MATTINGLY BRIDGE CO.

NASHVILLE BRIDGE COMPANY
NASHVILLE, TENN.
BESSEMER PLANT

APPROVED FOR SHOP: NWE 7/15/70 | NWE 7/15/70 | CHIEF DRAFTSMAN | CHIEF ENGINEER
REVISION NOTES: APPL. CHGS. 8/10/70

HOLES: 15/16⌀ OR NOTED | FIELD CONN.: 7/8⌀ H.S.B. | SHOP PAINT: SEE DWG GN1 | FIELD:
DRAWN BY G.D. DATE 10-22-69 | IN CHARGE: G. ATTI (TENSOR) | CHECKED BY 1/78 DATE 12/2/69 | DATE PRINTED

BILL MATERIAL NO. 15 | CONT. C6736 | S.O. B5725 | DRAWING NO. 15

D. K. ELLIOTT CO. PGH. PA. REORDER A-8373

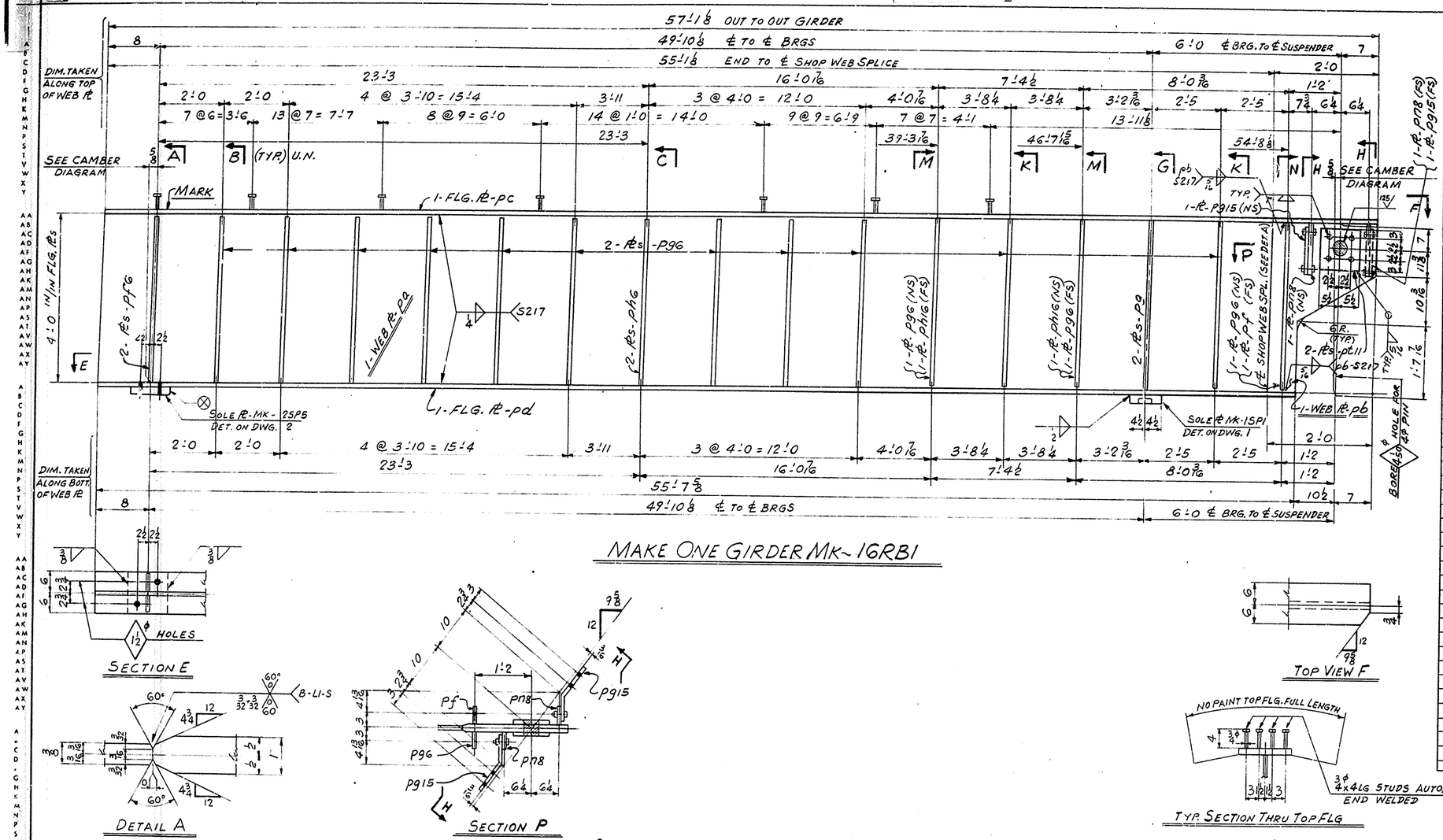

MAKE ONE GIRDER MK-16RB1

SECTION E

SECTION P

TOP VIEW F

DETAIL A

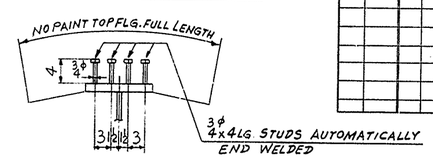

TYP. SECTION THRU TOP FLG

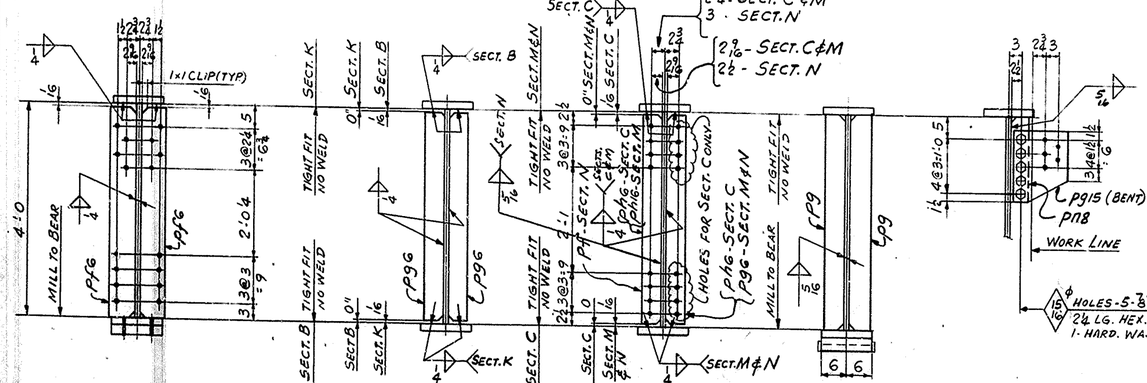

SECTION A — SECTION B&K — SECTION C&M&N — SECTION G — SECTION H (DEVEL.)

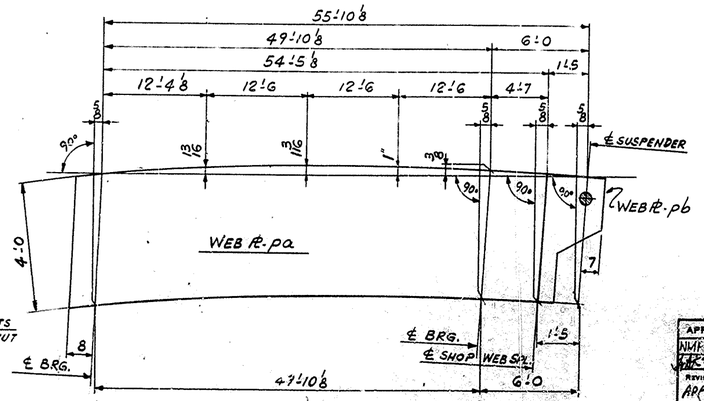

CAMBER DIAGRAM & WEB PL CUTTING SKETCH

MATERIAL ASTM-A36
FOR GENERAL NOTES SEE DWG. GN1
⊗ INDICATES THICKER SIDE OF SOLE PL

25

NASHVILLE BRIDGE COMPANY

SHOP ORDER NO. B5725
WORK ORDER NO.
CONTRACT NO. C6736

COMMONWEALTH OF KENTUCKY DEPT. OF HIGHWAYS, BRIDGE
OVER NORTH WESTERN PARKWAY & 22ND ST. JEFFERSON COUNTY.

FABRICATION BESSEMER PLANT

BILL NO. 16
DRAWING NO. 16

ITEM SHIP	SHIPPING MARK	ITEM QUANT.	ASSEMBLY MARK	SECTION	FINISHED LENGTH FT.	IN.	ORDERED LENGTH FT.	IN.	WEIGHTS BY P.O. NO.	ITEM NO.	REMARKS	SPECIF. WEIGHT	A.I.S.C. WEIGHT
				MATERIAL ASTM-A36 (U.N.)									
ONE	16RB1			GIRDER									
		1	pa	PL 47 3/16 x 3/8	55	1 3/4	49 1/2 x 55'-8		3908	531	PL 44 x 55'-3 MATCH CUT PL-pb & pd12		4/3
		1	pb	PL 48 5/8 x 1	2	0			3910	304			9/12
		1	pc	PL 12 x 3/4	57	1 1/8	73 3/4 CUTS @ 8/11		3910	314			4/7
		1	pd	PL 12 x 3/4	55	7 3/8	73 3/4 CUTS @ 8/11		3910	314			4/8
		2	pf6	PL 5 1/2 x 1/2	3	11 1/8			376 3908	4105	(MIE)		4/12
		25	pg6	PL 4 x 3/8	3	11 1/8			3905	625	(FIE)		4/13
		2	ph6	PL 4 x 3/8	3	11 1/8					(FIE)		
		2	ph16	PL 4 x 3/8	3	11 1/8					(FIE)		
		1	pf	PL 4 x 3/8	3	11 1/8			3905	625	(FIE)		
		2	pg	PL 5 1/2 x 1/6	4	0			3910	236	(MIE)(FIE)		4/12
		2	pg15	PL 13 1/2 x 3/8	1	3			376 3910	410	(BENT)		4/12
		2	pn8	PL 4 x 3/8	1	6 1/2			3905	605			4/17
		2	pt11	PL 11 x 3/8	0	11	90 CUTS @ 8/11		3909	409			4/19
		10		7/8 ϕ H.S. BOLTS	0	2 1/4			2A601	202	(A325) HEX. HD. HEX. NUT		✓
		10		HARD-WASHERS FOR 7/8 ϕ BOLTS						203	A325		✓
		236		3/4 ϕ STUDS	0	4			27P20	301	AUTO. END WELDED A108		✓
		1	2SP5	SOLE PL							DET. ON DWG. 2		
		1	1SP1	SOLE PL							DET. ON DWG. 1		

SHEET TOTAL

GIRDER DETAILS - SPAN R3 - RAMP A
BRIDGE OVER NORTHWESTERN PARKWAY & 22ND ST.
DEPARTMENT OF HIGHWAYS COMMONWEALTH OF KENTUCKY
JEFFERSON COUNTY F.A.P. IG4-2(36)1; SP56-273 ILL.
CONTRACTOR MATTINGLY BRIDGE CO.

NASHVILLE BRIDGE COMPANY
NASHVILLE, TENN.
BESSEMER PLANT

APPROVED FOR SHOP
NWK 12/5/70 CHIEF DRAFTSMAN
12/4/70 CHIEF ENGINEER
REVISION NOTES
APPL. CHGE. 2/10/70

HOLES 15/16 ϕ OR NOTED
FIELD CONN. 7/8 ϕ H.S.B.
SHOP PAINT SEE DWG. GN1
FIELD

DRAWN BY G.D. DATE 10-22-69
IN CHARGE: GATTI/TENSON
CHECKED BY V.H. DATE 12/2/69
DATE PRINTED

BILL MATERIAL NO. 16
CONT. C6736
S.O. B5725
DRAWING NO. 16

BRIDGE

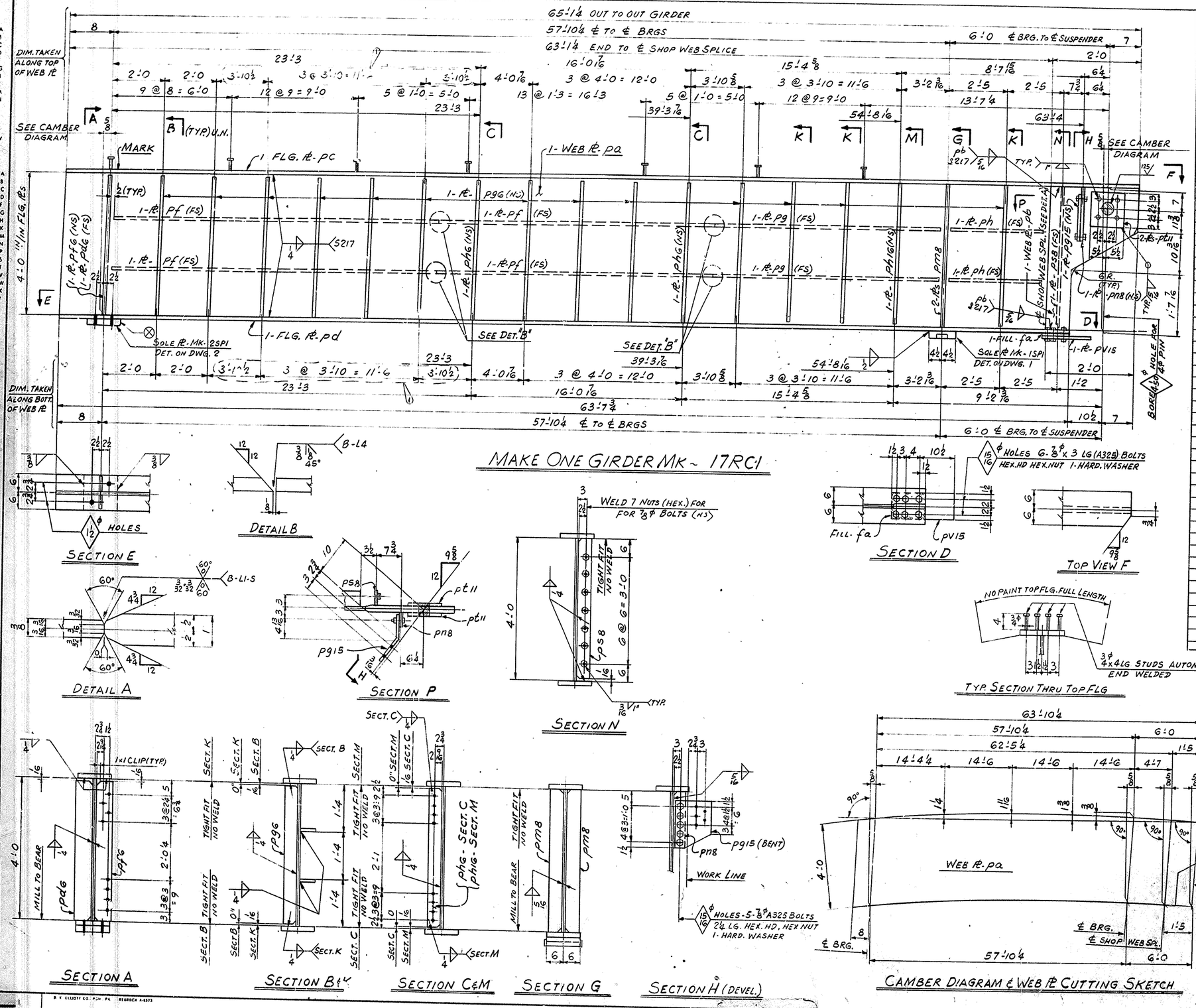

NASHVILLE BRIDGE COMPANY

SHOP ORDER NO. B5725
WORK ORDER NO.
CONTRACT NO. C6736

COMMONWEALTH OF KENTUCKY DEPT. OF HIGHWAYS, BRIDGE OVER NORTH WESTERN PARKWAY & 22ND ST. JEFFERSON COUNTY.

FABRICATION BESSEMER PLANT

BILL NO. 17
DRAWING NO. 17

WEIGHTS BY ____ CHECKED BY ____

ITEM	SHIPPING MARK	ITEM COUNT	ASSEMBLY MARK	SHIPPING	SECTION	FINISHED LENGTH FT. IN.	ORDERED LENGTH FT. IN.	P.O. NO.	ITEM NO.	REMARKS	SPECIF. WEIGHT	ACTUAL WEIGHT
					MATERIAL ASTM-A36 (U.N.)							
ONE	17RC1				GIRDER							
		1	pa	PL	49 1/16 x ⅜	63 1 7/16	50 x 25-5	3910	330	ϕ 49 x 3.13 MATCH CUT LEA pb & pd13		
		1	pb	PL	48 5/8 x 1	2 0		3910	304			
		1	pc	PL	12 x ⅝	65 1/4	78 x 12	3910	319			
		1	pd	PL	12 x ⅝	63 7/8	75 x 12	3910	319			
		1	pf6	PL	5½ x ½	3 11/16		3905	685	(MIE)		
		1	pd6	PL	5½ x ½	3 11/16		3905	685	(MIE)		
		13	pg6	PL	4 x ⅜	3 11/16		3905	685	(FIE)		
		2	ph6	PL	4 x ⅜	3 11/16				(FIE)		
		1	ph16	PL	4 x ⅜	3 11/16		3905	685	(FIE)		
		2	pm8	PL	5½ x 1	4 0		3910	303	(MIE)(FIE)		
		1	ps8	PL	4 x ⅜	3 11/16		3905	685	(FIE)		
		1	pm8	PL	4 x ⅜	1 6½		3905	685			
		1	pg15	PL	13½ x ⅜	1 3		STK 3740	410	BENT		
		2	pt11	PL	11 x ⅜	0 11	30 CUT 12	3910	409			
		1	pv15	PL	7 x ¾	1 7		STK 3670	316			
		4	pf	PL	4 x ⅜	20 0		3905	685			
		2	pg	PL	4 x ⅜	17 8½		3905	685			
		2	ph	PL	4 x ⅜	4 5½		3905	685			
		1	fa	PL	7 x ¼	0 10		STK 3470	612			
		228			¾ϕ STUDS	0 4		27120	301	AUTO-END WELDED		
		5			⅞ϕ H.S. Bolts	0 2¼		REQ 73674 26661	209 (A325)	HEX HD HEX NUT		
		6			⅞ϕ H.S. Bolts	0 3		REQ 73674 26661	201 (A325)	HEX HD HEX NUT		
		11			HARD WASHER FOR ⅞ϕ H.S. BOLTS			REQ 73674 26661	205 (A325)			
		7			⅞ϕ NUTS			STK		HEX. (A307)		
		1	2SPI		SOLE PL					DET. ON DWG. 2		
		1	1SPI		SOLE PL					DET. ON DWG. 1		
										SHEET TOTAL		

MATERIAL ASTM-A36
FOR GENERAL NOTES SEE DWG. GN1
⊗ INDICATES THICKER SIDE OF SOLE PL

26

GIRDER DETAILS - SPAN R3 - RAMP "A"
BRIDGE OVER NORTHWESTERN PARKWAY & 22ND ST.
DEPARTMENT OF HIGHWAYS COMMONWEALTH OF KENTUCKY
JEFFERSON COUNTY F.A.P. I64-2(34) ; S.P. 56-273.111.
CONTRACTOR MATTINGLY BRIDGE CO.

NASHVILLE BRIDGE COMPANY
NASHVILLE, TENN.
BESSEMER PLANT

APPROVED FOR SHOP
CHIEF DRAFTSMAN
CHIEF ENGINEER
REVISION NOTES
APPL. CHGS. 2/10/70
4/16/70

HOLES 15/16 ϕ UNLESS OTHERWISE NOTED
FIELD CONN. ⅞ϕ H.S.B.
SHOP PAINT SEE DWG GN1
FIELD

DRAWN BY G.D. DATE 10-23-69
IN CHARGE GATTI (TERGO)
CHECKED BY YM DATE 12/2/69
DATE PRINTED

BILLS MATERIAL NO. 17
CONT. C6736
S.O. B5725
DRAWING NO. 17

B. K. ELLIOTT CO. PITTSBURGH PA. REORDER A-8373

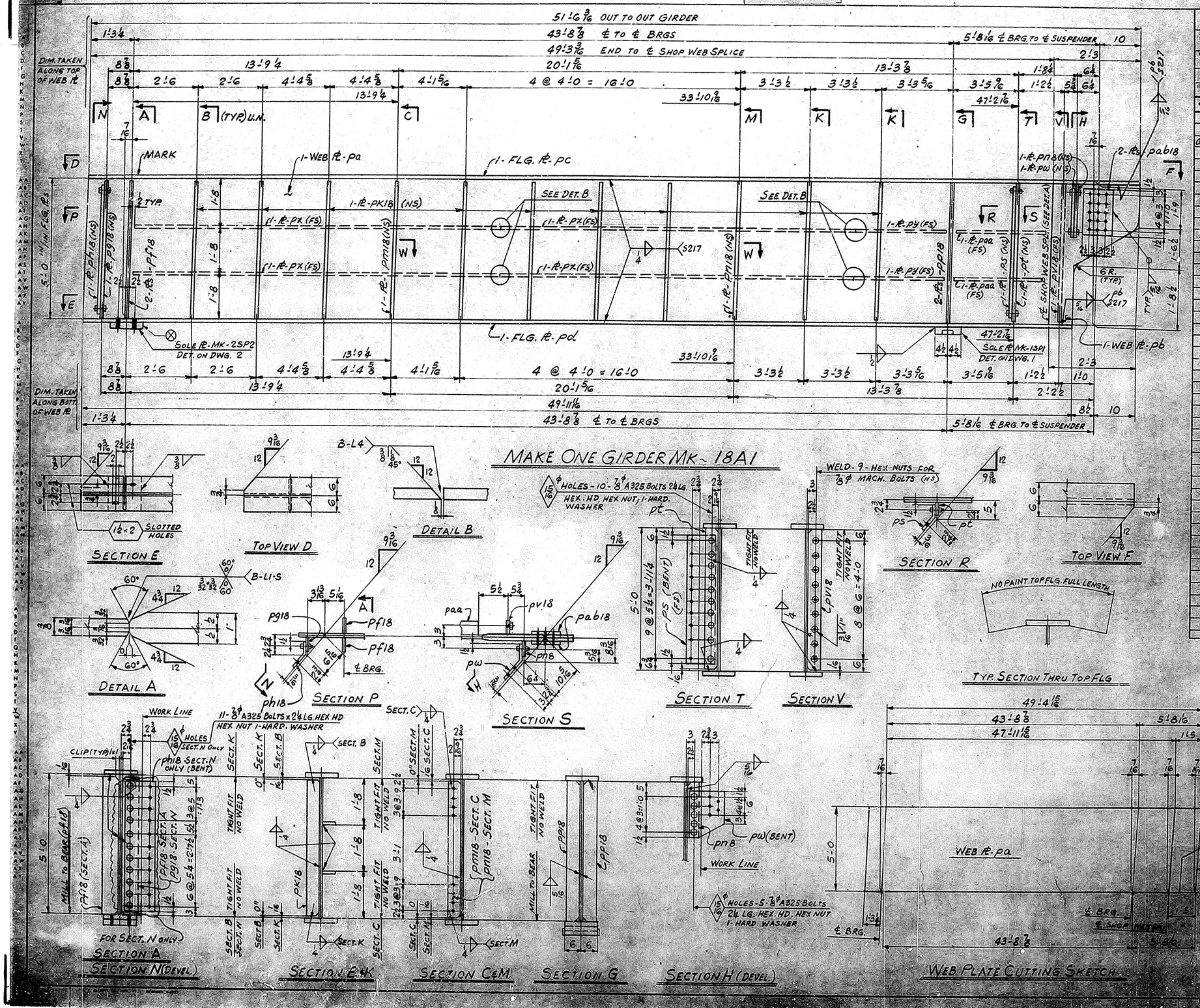

NASHVILLE BRIDGE COMPANY

SHOP ORDER NO. 85725
WORK ORDER NO.
CONTRACT NO. C6736

COMMONWEALTH OF KENTUCKY DEPT. OF HIGHWAYS, BRIDGE OVER NORTH WESTERN PARKWAY & 22ND ST. JEFFERSON COUNTY.

BILL NO. 18
DRAWING NO. 18

FABRICATION BESSEMER PLANT

ITEM

WEIGHTS BY CHECKED BY

SHOP	SHIPPING MARK	ITEM QUANT.	ASSEMBLY MARK	MATERIAL	SECTION	FINISHED LENGTH Ft. In.		ORDERED LENGTH Ft. In.		P.O. NO.	ITEM NO.	REMARKS	SPECIF. WEIGHT	A.F.B.C. WEIGHT
					MATERIAL ASTM-A36 (U.N.)									
ONE	18A1				GIRDER									
		1	pa	℞	60 x 3/8	49	3 3/8	60 x 49'-7		3908	526	℞s 61 x 3/16 MATCH CUT LEN. PD & PDAB		
		1	pb	℞	27 7/16 x 1	5	0			3910	906			
		1	pc	℞	12 x 9/16	51	6 3/16	8 ℞s CUT 51'-7 1/2		3910	327			
		1	pd	℞	12 x 9/16	49	11 11/16	8 ℞s CUT 49'-7 1/2		3910	327			
		2	pf18	℞	5 1/2 x 1/2	4	11 1/8			STK 3680	906	(MIE)		
		1	pg18	℞	4 x 3/8	4	11 1/8			3905	605	(FIE)		
		1	ph18	℞	7 7/8 x 3/8	4	7			STK 3372	578	(BENT)		
		9	pk18	℞	4 x 3/8	4	11 1/8			3905	605	(FIE)		
		1	pm18	℞	4 x 3/8	4	11 1/8			3905	605	(FIE)		
		1	pn18	℞	4 x 3/8	4	11 1/8			3905	605	(FIE)		
		2	pp18	℞	5 1/2 x 1 1/16	5	0			3910	254	(131E) (FIE)		
		1	ps	℞	7 7/8 x 3/8	4	2 1/2			STK 3372	578	(BENT)		
		1	pt	℞	4 x 3/8	4	11 1/8			3905	605	(FIE)		
		1	pv18	℞	4 x 3/8	4	11 1/8			3905	605	(FIE)		
		1	pw	℞	13 7/8 x 3/8	1	3			STK 3372	578	(BENT)		
		1	pn8	℞	4 x 3/8	1	6 1/2			3905	605			
		2	pab18	℞	11 x 3/4	1	3			STK 2674	376			
		4	px	℞	4 x 3/8	20	0			3905	605			
		2	py	℞	4 x 3/8	3	6 1/2			3905	605			
		2	paa	℞	4 x 3/8	4	1/2			3905	605			
		26			7/8φ BOLTS	0	2 1/4			RPC 28679	008	(A325) HEX HD HEX NUT		
		26			HARD WASHER FOR 7/8φ BOLTS					RPC 28679	008	(A325) HEX.		
		9			7/8φ HEX. NUTS							STK (A307)		
		1	2SP2		SOLE ℞							DET. ON SHT. 2		
		1	1SP1		SOLE ℞							DET. ON SHT. 1		
												SHEET TOTAL		

GIRDER DETAILS SPAN 1W
BRIDGE OVER NORTHWESTERN PARKWAY & 22ND ST.
DEPARTMENT OF HIGHWAYS COMMONWEALTH OF KENTUCKY
JEFFERSON COUNTY F.A.P. 164-2 (34) (F) SP 56-213 (11)
CONTRACTOR MATTINGLY BRIDGE CO.

NASHVILLE BRIDGE COMPANY
NASHVILLE, TENN.
BESSEMER PLANT

APPROVED FOR SHOP
Approved 7/10/56

BRIDGE

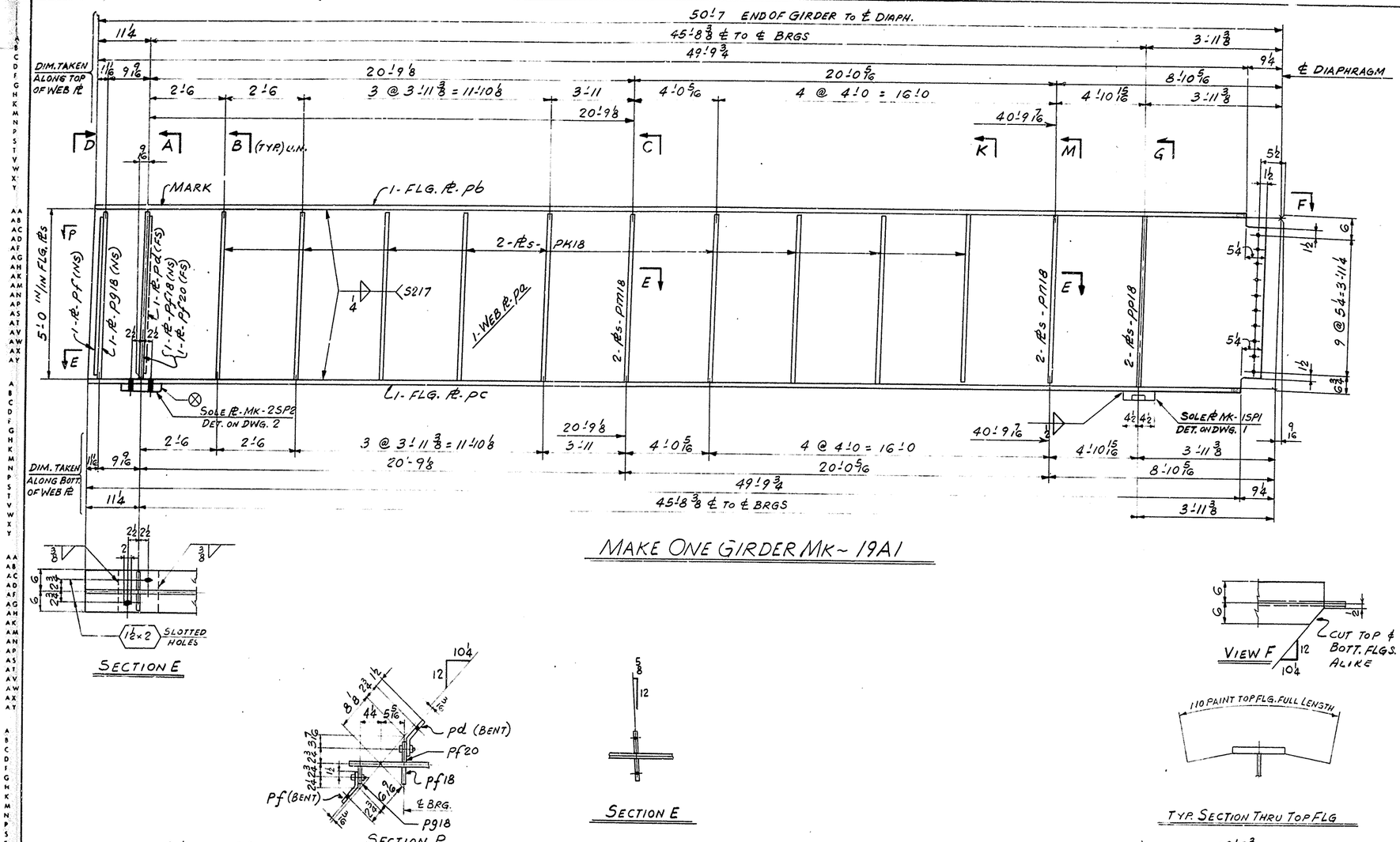

SECTION E

SECTION P

SECTION E

VIEW F

TYP. SECTION THRU TOP FLG

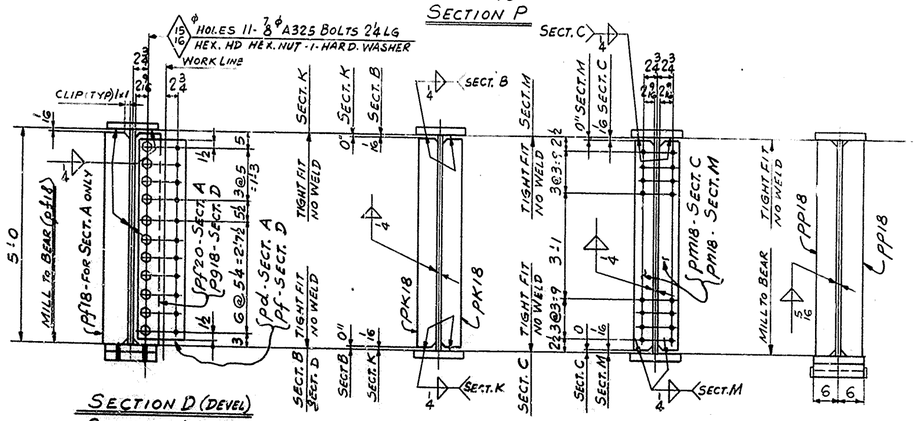

SECTION D (DEVEL)
SECTION A (DEVEL.)
SECTION B & K
SECTION C & M
SECTION G

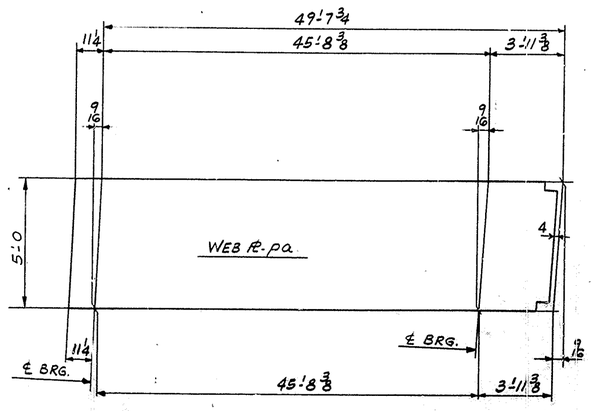

WEB PLATE CUTTING SKETCH

MATERIAL ASTM-A36 (U.N.)
FOR GENERAL NOTES SEE DWG. GN1
⊗ INDICATES THICKER SIDE OF SOLE PL

28

NASHVILLE BRIDGE COMPANY

SHOP ORDER NO. B5725
WORK ORDER NO.
CONTRACT NO. CG736

COMMONWEALTH OF KENTUCKY DEPT. OF HIGHWAYS BRIDGE
OVER NORTH WESTERN PARKWAY & 22ND ST. JEFFERSON COUNTY.

FABRICATION BESSEMER PLANT

BILL NO. 19
DRAWING NO. 19

ITEM
WEIGHTS BY
CHECKED BY

SHIP	SHIPPING MARK	ITEM QUANT.	ASSEMBLY MARK	SHAPE	SECTION	FINISHED LENGTH FT. IN.	ORDERED LENGTH FT. IN.	P.O. NO.	ITEM NO.	REMARKS	SPECIF. WEIGHT	A.I.S.C. WEIGHT	
					MATERIAL ASTM-A36 (U.N.)								
ONE 19A1					GIRDER								
		1	pa	PL	60 x 3/8	50 3 1/2	60 x 50:6	3902	605				5/3
		1	pb	PL	12 x 9/16	49 9 3/4	851 CUTS 7 @ 12	3910	327				5/10
		1	pc	PL	12 x 9/16	49 9 3/4	1652 CUTS 7 @ 12	3910	327				5/10
		1	pf	PL	7 7/8 x 3/8	4 7		3372	527	(BENT)			5/22
		1	pg18	PL	4 x 3/8	4 11 15/16		3905	605	(FIE)			5/21
		1	pf18	PL	5 1/2 x 1/2	4 11 15/16		3680	406	(MIE)			5/18
		1	pf20	PL	5 1/2 x 1/2	4 11 15/16		3680	406	(MIE)			5/18
		18	pk18	PL	4 x 3/8	4 11 15/16		3905	605	(FIE)			5/21
		2	pm18	PL	4 x 3/8	4 11 15/16		3905	605	(FIE)			5/21
		2	pn18	PL	4 x 3/8	4 11 15/16		3905	605	(FIE)			5/21
		2	pp18	PL	5 1/2 x 11/16	5 0		3910	334	(MIE) (FIE)			5/19
		1	pd	PL	9 3/16 x 3/8	4 7		3372	527	(BENT)			5/22
		1	2SP2		SOLE PL					DET. ON DWG. 2			
		1	1SP1		SOLE PL					DET. ON DWG. 1			
		22			7/8 ϕ BOLTS	0 2 4		RED 28614 26661	603	(A325) HEX. HD HEX. NUT			
		22			HARD WASHERS FOR 7/8 ϕ BOLTS			RED 28671 26661	603	(A325)			
					1/4 WELD	454 LF.							
					5/16 WELD	19 LF.							
					3/8 WELD	2 LF.							
					1/2 WELD	2 LF.							

SHEET TOTAL

GIRDER DETAILS SPAN 1E
BRIDGE OVER NORTHWESTERN PARKWAY & 22ND ST.
DEPARTMENT OF HIGHWAYS COMMONWEALTH OF KENTUCKY
JEFFERSON COUNTY F.A.P. IG4-2(34)1; SP56-273 1IL
CONTRACTOR MATTINGLY BRIDGE CO.

NASHVILLE BRIDGE COMPANY
NASHVILLE, TENN.
[redacted] BESSEMER PLANT

APPROVED FOR SHOP
NMF 7/13/70 CHIEF DRAFTSMAN
MK 7/14/70 CHIEF ENGINEER
REVISION NOTES
APPL. CHGE. 2/10/70

[redacted] OR NOTED
HOLES 15/16 OR NOTED
FIELD CONN. 7/8 ϕ H.S.B.
SHOP PAINT SEE DWG GN1
FIELD

DRAWN BY G.D. DATE 11-1-69
IN CHARGE: GATTI (TENSOR)
CHECKED BY VM DATE 12/7/69
DATE PRINTED [redacted]

BILL MATERIAL NO. 19
CONT. CG736
S.O. B5725
DRAWING NO. 19

BRIDGE

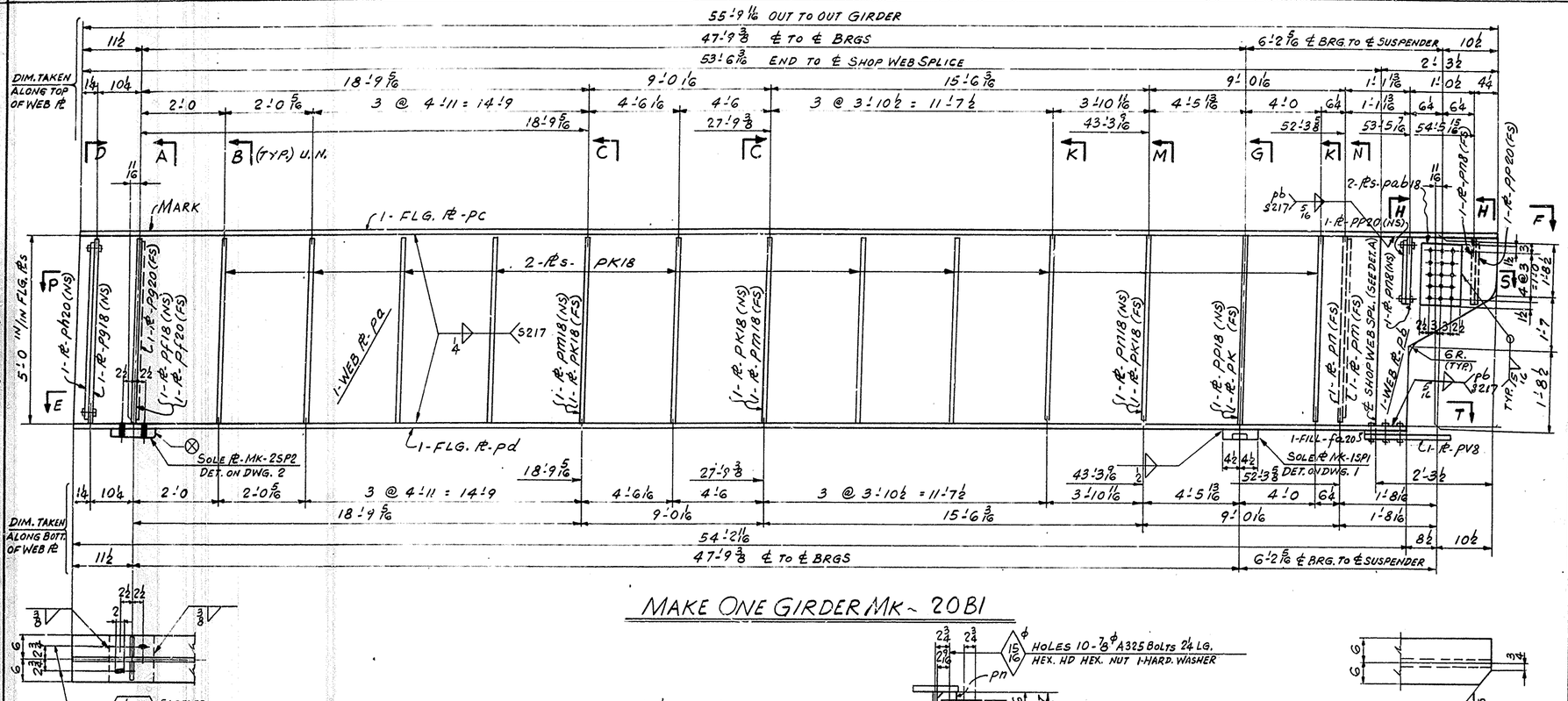

MAKE ONE GIRDER MK- 20B1

SECTION E

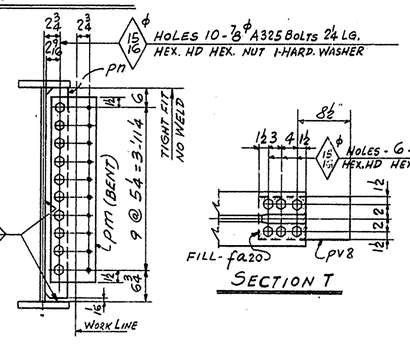

SECTION N

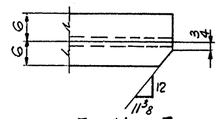

TOP VIEW F

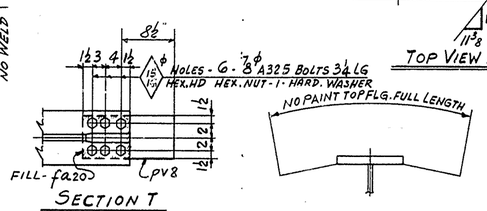

SECTION T

TYP. SECTION THRU TOP FLG

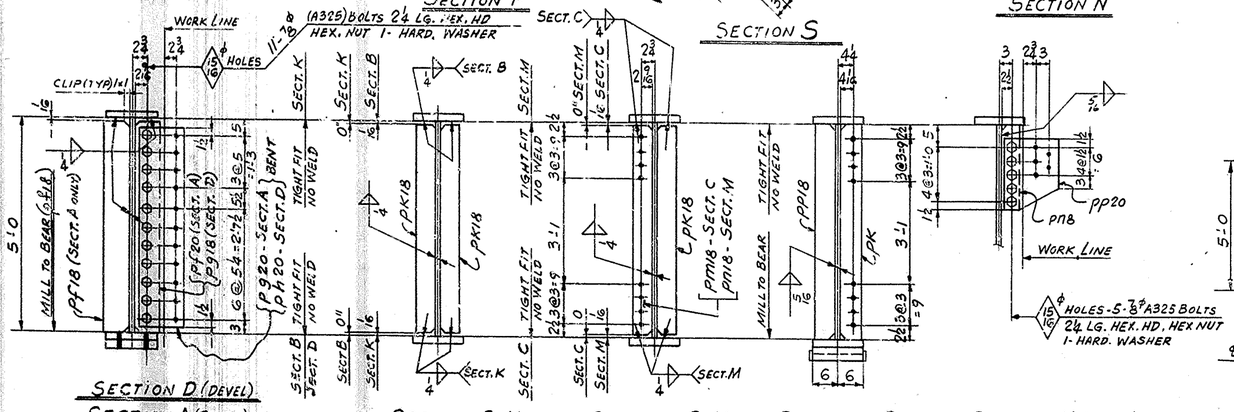

SECTION D (DEVEL.)

SECTION A (DEVEL.)

SECTION B&K

SECTION C&M

SECTION G

SECTION H (DEVEL.)

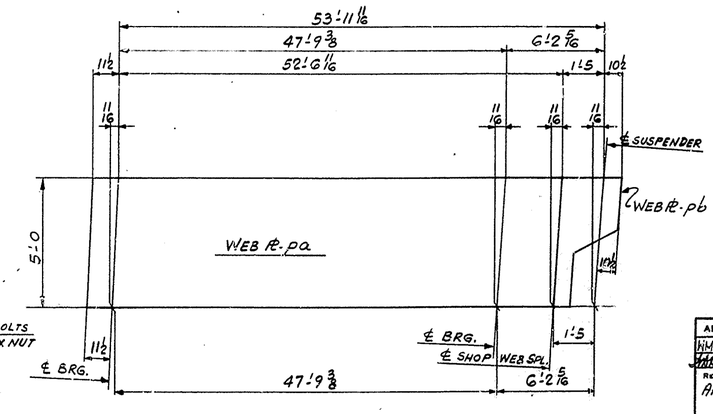

WEB PLATE CUTTING SKETCH

MATERIAL ASTM-A36 (U.N.)
FOR GENERAL NOTES SEE DWG. GN1
⊗ INDICATES THICKER SIDE OF SOLE PL

20

NASHVILLE BRIDGE COMPANY

SHOP ORDER NO. B5725
WORK ORDER NO.
CONTRACT NO. C6736

COMMONWEALTH OF KENTUCKY DEPT. OF HIGHWAYS, BRIDGE
OVER NORTH WESTERN PARKWAY & 22ND ST. JEFFERSON COUNTY.

FABRICATION BESSEMER PLANT

BILL NO. 20
DRAWING NO. 20

ITEM	SHIP	SHIPPING MARK	ITEM QUANT.	ASSEMBLY MARK	MARK	SECTION	FINISHED LENGTH FT. - IN.	ORDERED LENGTH FT. - IN.	WEIGHTS SY	P.O. NO.	ITEM NO.	REMARKS	SPECIF. WEIGHT	ACTUAL WEIGHT
						MATERIAL ASTM-A36 (U.N.)								
ONE	20B1					GIRDER								
			1	pa	PL	60 × 3/8	53 6 7/8	60 × 53-10		3908	522			
			1	pb	PL	28 7/16 × 1	5 0			3910	326	PL 61 × 3-6 MATCH CUT (TEM. PB & PD)		5/4 5/7 5/11
			1	pc	PL	12 × 9/16	55 9 11/16	85½ + 56½ CUTS 2		3910	328			
			1	pd	PL	12 × 9/16	54 2 11/16	85½ + 54½ CUTS 7		3910	327			5/12
			1	ph20	PL	8 × 3/8	4 7			STK 3372	527	(BENT)		5/22
			1	pp18	PL	4 × 3/8	4 11 15/16			3905	605	(FIE)		5/21
			1	pp18	PL	5 1/2 × 1/2	4 11 15/16			STK 3680	406	(MIE)		5/18
			1	pf20	PL	5 1/2 × 1/2	4 11 15/16			STK 3680	406	(MIE)		5/18
			1	p920	PL	8 3/4 × 3/8	4 7			STK 3372	527	(BENT)		5/22
			21	pk18	PL	4 × 3/8	4 11 15/16			3905	605	(FIE)		5/21
			2	pm18	PL	4 × 3/8	4 11 15/16			3905	605	(FIE)		5/21
			1	pn18	PL	4 × 3/8	4 11 15/16			3905	605	(FIE)		5/21
			1	pp18	PL	5 1/2 × 11/16	5 0			3910	234	(MIE) (FIE)		5/19
			1	pk	PL	5 1/2 × 11/16	5 0			3910	234	(MIE) (FIE)		5/19
			1	pn	PL	4 × 3/8	4 11 15/16			3905	605	(FIE)		5/21
			1	pm	PL	8 × 3/8	4 2 1/4			STK 3372	528	(BENT)		5/24
			2	pp20	PL	12 3/8 × 3/8	1 3			STK 3372	438	(BENT)		5/23
			2	pn8	PL	4 × 3/8	1 6 1/2			3905	465			5/26
			2	pab18	PL	11 × 3/4	1 3			STK 2674	316			5/25
			1	pv8	PL	7 × 3/4	1 5			STK 2674	316			5/27
			1	fa20	PL	7 × 1/16	0 10			3910	523			5/28
			1	2SP2		SOLE PL						DET. ON DWG. 2		
			1	1SP1		SOLE PL						DET. ON DWG. 1		
			42			7/8 ϕ BOLTS	0 2 1/4			24461	200	(A325) HEX. HD HEX. NUT		
			6			7/8 ϕ BOLTS	0 3 1/4				202	(A325) HEX. HD HEX. NUT		
			48			HARD. WASHERS FOR 7/8 BOLTS					203	(A325)		

SHEET TOTAL

GIRDER DETAILS SPAN 1W
BRIDGE OVER NORTHWESTERN PARKWAY & 22ND ST.
DEPARTMENT OF HIGHWAYS COMMONWEALTH OF KENTUCKY
JEFFERSON COUNTY F.A.P. IG4-2(34)1; SP56-273 1L
CONTRACTOR MATTINGLY BRIDGE CO.

NASHVILLE BRIDGE COMPANY
NASHVILLE, TENN.
BESSEMER PLANT

APPROVED FOR SHOP
HMF 7/12/70 CHIEF DRAFTSMAN
CHIEF ENGINEER
REVISION NOTES
APPL. CHGS. 7/19/70

HOLES 15/16 ϕ OR NOTED
FIELD CONN. 7/8 ϕ H.S.B.
SHOP PAINT SEE DWG. GN1
FIELD

DRAWN BY G.D. DATE 10-27-69
IN CHARGE: GATTI (TENOR)
CHECKED BY DATE 12/9/69
DATE PRINTED

BILLS MATERIAL NO. 20
CONT. C6736
S.O. B5725
DRAWING NO. 20

B. K. ELLIOTT CO. PGH. PA. REORDER E-2931

BRIDGE

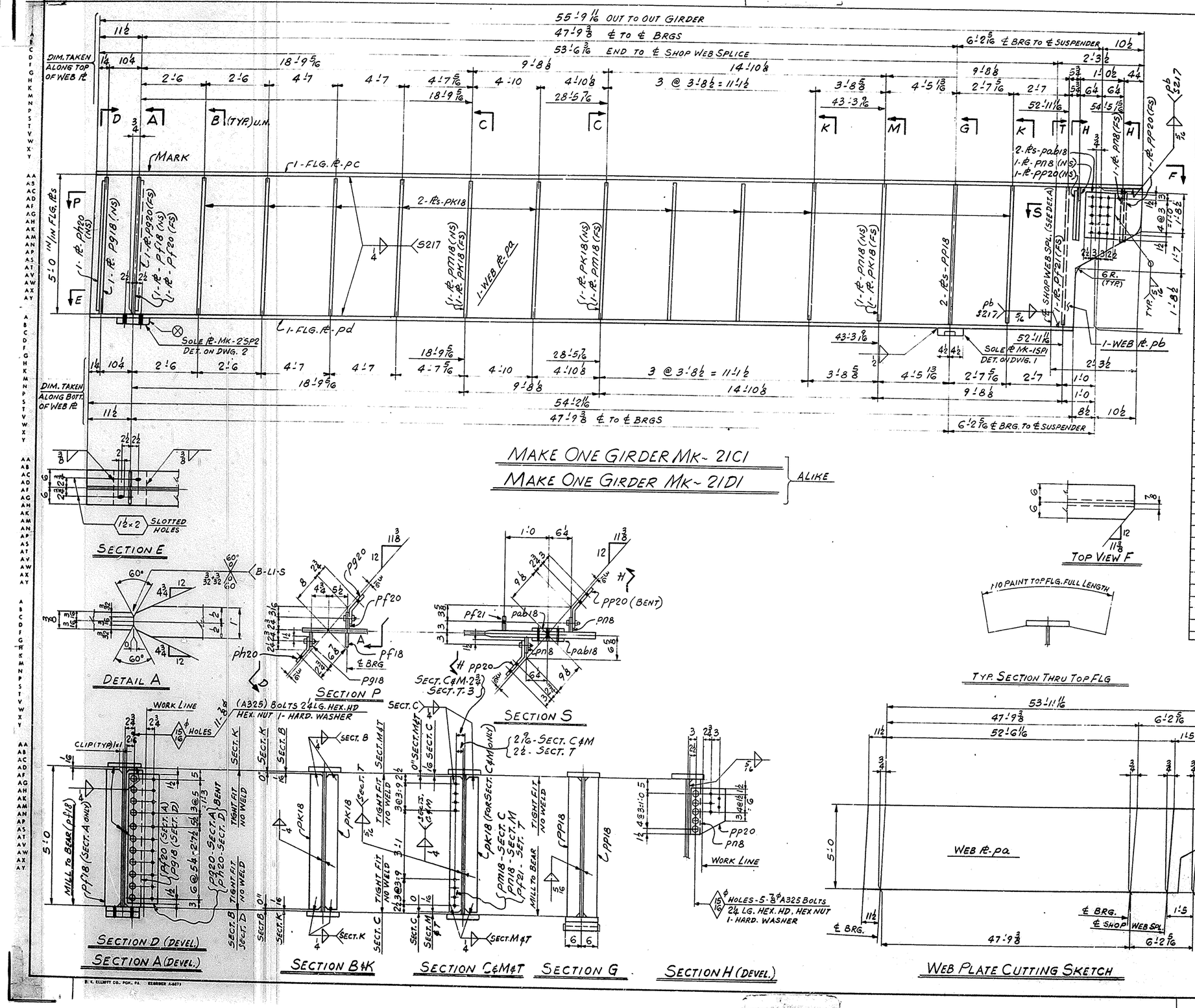

MATERIAL ASTM-A36 (U.N.)
FOR GENERAL NOTES SEE DWG. GN1
⊗ INDICATES THICKER SIDE OF SOLE PL

30

NASHVILLE BRIDGE COMPANY

SHOP ORDER NO. B5725
WORK ORDER NO.
CONTRACT NO. CG736

COMMONWEALTH OF KENTUCKY DEPT. OF HIGHWAYS, BRIDGE
OVER NORTH WESTERN PARKWAY & 22ND ST. JEFFERSON COUNTY.

FABRICATION BESSEMER PLANT

BILL NO. 21
DRAWING NO. 21

WEIGHTS BY
CHECKED BY

SHIP	SHIPPING MARK	ITEM QUANT	ASSEMBLY MARK	SHAPE	SECTION	FINISHED LENGTH FT. IN	ORDERED LENGTH FT. IN	P.O. NO	ITEM NO	REMARKS	SPECIF. WEIGHT	ACTUAL WEIGHT
					MATERIAL ASTM-A36 (U.N.)							
ONE	21C1				GIRDER							
ONE	21D1				GIRDER					} ALIKE		
		2	pa	PL	60 x 3/8	53 6 1/16	60 x 53'-10	3908	572	PL-G1 x 3'-6		
		2	pb	PL	28 1/4 x 1	5 0		3910	802	MATCH CUT pd20 1-EA. PL-L1		5/4
		2	pc	PL	12 x 1/16	55 9 1/16	855 x 56'-0 CUT 2	3910	826			5/7
		2	pd	PL	12 x 1/16	54 2 1/16	852 x 54'-6 CUT 2	3910	827			5/11
		2	ph20	PL	8 x 3/8	4 7		STC 3372	523	(BENT)		5/12
		2	pg18	PL	4 x 3/8	4 11 15/16		3905	605	(FIE)		5/22
		2	pf18	PL	5 1/2 x 1/2	4 11 15/16		3680 3680	406	(MIE)		5/21
		2	pf20	PL	5 1/2 x 1/2	4 11 15/16		3680 3680	406	(MIE)		5/18
		2	pg20	PL	8 3/4 x 3/8	4 7		3372	527	(BENT)		5/18
		42	pk18	PL	4 x 3/8	4 11 15/16		3905	605	(FIE)		5/22
		4	pm18	PL	4 x 3/8	4 11 15/16		3905	605	(FIE)		5/21
		2	pn18	PL	4 x 3/8	4 11 15/16		3905	605	(FIE)		5/21
		4	pp18	PL	5 1/2 x 1 1/16	5 0		3910	234	(MIE) (FIE)		5/21
		2	pf21	PL	4 x 3/8	4 11 15/16		3905	605	(FIE)		5/19
		4	pab18	PL	11 x 3/4	1 3		3175 2674	216			5/21
		4	pn8	PL	4 x 3/8	1 6 1/2		3905	605			5/25
		4	pp20	PL	12 3/8 x 3/8	1 3		3372	438	(BENT)		5/26
		2	2SP2		SOLE PL					DET. ON DWG. 2		5/13
		2	1SP1		SOLE PL					DET. ON DWG. 1		
		64			7/8 ϕ BOLTS	0 2 1/4		R-08679 26661	002	(A325) HEX. HD HEX. NUT		
		64			HARD. WASHERS FOR 7/8 ϕ BOLTS			R-08679 26661	003	(A325)		
										SHEET TOTAL		

GIRDER DETAILS SPAN 1W
BRIDGE OVER NORTH WESTERN PARKWAY & 22ND ST.
DEPARTMENT OF HIGHWAYS COMMONWEALTH OF KENTUCKY
JEFFERSON COUNTY F.A.P. IG4-2(34)1; SP 86-273 1L
CONTRACTOR MATTINGLY BRIDGE CO.

NASHVILLE BRIDGE COMPANY
NASHVILLE, TENN.
BESSEMER PLANT

APPROVED FOR SHOP
WMF 7/13/70 CHIEF DRAFTSMAN
JAC 7/15/70 CHIEF ENGINEER
REVISION NOTES
APPL. CHGS. 7/10/70

HOLES 15/16 ϕ OR NOTED
FIELD CONN. 7/8 ϕ H.S.B.
SHOP PAINT SEE DWG. GN1
FIELD

DRAWN BY G.D. DATE 10-27-69
IN CHARGE: G. PATTI (TENSOR)
CHECKED BY DATE 12/2/69
DATE PRINTED

BILL MATERIAL NO. 21
CONT. CG736
S.O. B5725
DRAWING NO. 21

B. K. ELLIOTT CO. PGH., PA. REORDER 6-8873

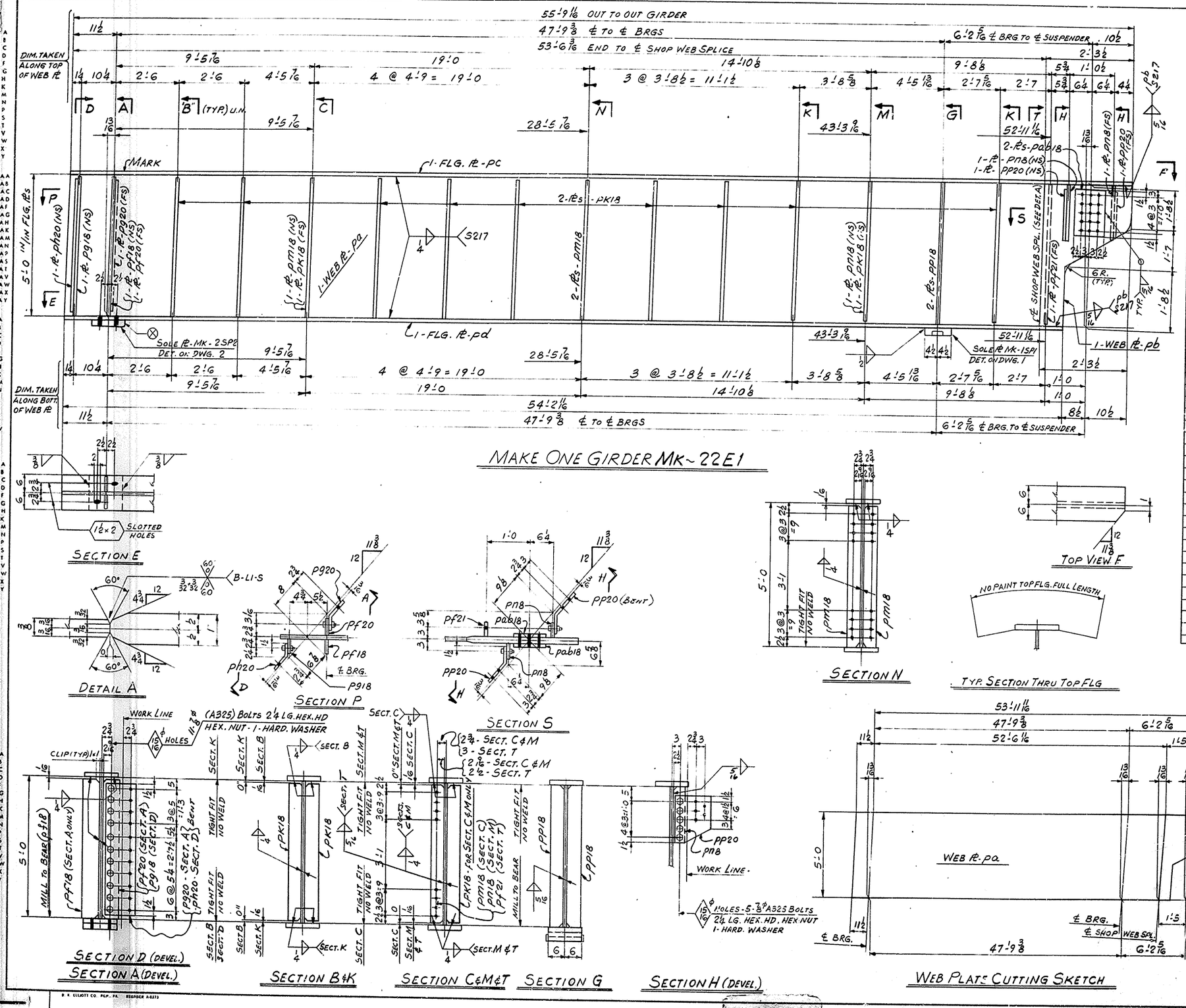

MAKE ONE GIRDER MK-22E1

SECTION E

DETAIL A

SECTION P

SECTION S

SECTION N

TYP. SECTION THRU TOP FLG

TOP VIEW F

SECTION D (DEVEL.)

SECTION A (DEVEL.)

SECTION B&K

SECTION C&M&T

SECTION G

SECTION H (DEVEL.)

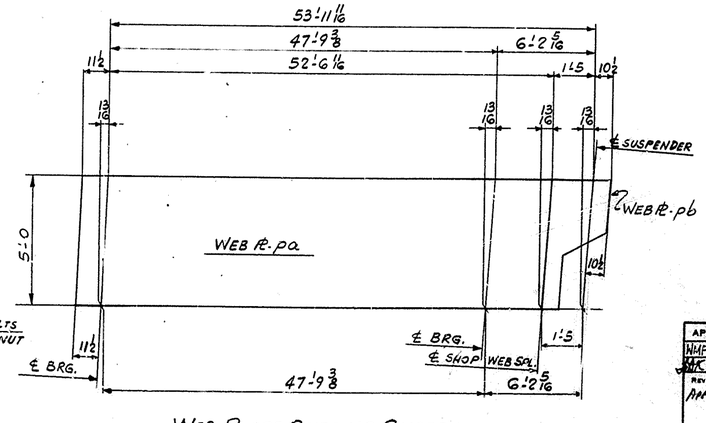

WEB PLATE CUTTING SKETCH

MATERIAL ASTM-A36 (U.N.)
FOR GENERAL NOTES SEE DWG. GN1
⊗ INDICATES THICKER SIDE OF SOLE PL

31

NASHVILLE BRIDGE COMPANY

COMMONWEALTH OF KENTUCKY DEPT. OF HIGHWAYS, BRIDGE OVER NORTH WESTERN PARKWAY & 22ND ST. JEFFERSON COUNTY.

FABRICATION BESSEMER PLANT

SHOP ORDER NO. B5725 | WORK ORDER NO. | CONTRACT NO. CG736 | BILL NO. 22 | DRAWING NO. 22

WEIGHTS BY | CHECKED BY

SHIP	SHIPPING MARK	ITEM QUANT.	ASSEMBLE MARK	MARK	SECTION	FINISHED LENGTH FT	FINISHED LENGTH IN	ORDERED LENGTH FT	ORDERED LENGTH IN	P.O. NO	ITEM NO	REMARKS	SPECIF. WEIGHT	A B C WEIGHT	
					MATERIAL A57M-A36 (U.N.)										
ONE	22E1				GIRDER										
		1	pa	PL	60×3/8	53	7	60×53'-10		3908	570	PL 61×3-6 (NOTCH CUT 1 EA. pb & pd23)			5/4
		1	pb	PL	28 7/16×1	5	0			3910	306				5/7
		1	pc	PL	12×9/16	55	9 1/16	55 1/4×56'-3 CUT 2		3910	326				5/11
		1	pd	PL	12×1/16	54	2 1/16	55 1/4×56'-6 CUT 2		3910	327				5/12
		1	ph20	PL	8×3/8	4	7			STK 3372	537	BENT			5/22
		1	pg18	PL	4×3/8	4	11 15/16			3905	605	(FIE)			5/20
		1	pf18	PL	5 1/2×1/2	4	11 15/16			STK 3680	406	(MIE)			5/18
		1	pf20	PL	5 1/2×1/2	4	11 15/16			STK 3680	406	(MIE)			5/19
		1	pg20	PL	8 3/4×3/8	4	7			STK 3372	537	BENT			5/22
		20	pk18	PL	4×3/8	4	11 15/16			3905	605	(FIE)			5/21
		3	pm18	PL	4×3/8	4	11 15/16			3905	605	(FIE)			5/21
		1	pn18	PL	4×3/8	4	11 15/16			3905	605	(FIE)			5/21
		2	pp18	PL	5 1/2×1/16	5	0			3910	234	(MIE) (FIE)			5/19
		1	pf21	PL	4×3/8	4	11 15/16			3905	605	(FIE)			5/21
		2	pn8	PL	4×3/8	1	6 1/2			3905	605				5/26
		2	pp20	PL	12 3/8×3/8	1	3			STK 3372	438	(BENT)			5/23
		2	pab18	PL	11×3/4	1	3			2656	316				5/25
		1	2SP2	SOLE PL								DET. ON DWG. 2			
		1	1SP1	SOLE PL								DET. ON DWG. 1			
		32		7/8 ϕ BOLTS		0	2 1/4			REQ 2960	002	(A325) HEX HD HEX NUT			
		32		HARD WASHERS FOR 7/8 BOLTS						REQ 2960	013	A325			
												SHEET TOTAL			

GIRDER DETAILS SPAN 1W
BRIDGE OVER NORTHWESTERN PARKWAY & 22ND ST.
DEPARTMENT OF HIGHWAYS COMMONWEALTH OF KENTUCKY
JEFFERSON COUNTY F.A.P. IG4-2(36); SP 56-273 11L
CONTRACTOR MATTINGLY BRIDGE CO.

NASHVILLE BRIDGE COMPANY
NASHVILLE, TENN.
BESSEMER PLANT

APPROVED FOR SHOP
Chief Draftsman — Chief Engineer
Revision Notes: Appl. Chec. 7/10/70

Drawn by G.D. Date 10-28-69
In Charge: Gatti (Tensor)
Holes 15/16 ϕ or noted
Field Conn. 7/8 ϕ H.S.B.
Shop Paint — See Dwg. GN1
Field —
Checked by VM Date 12/9/69
Date Printed

Bills Material No.	Cont.	Drawing No.
22	CG736	22
	S.O. B5725	

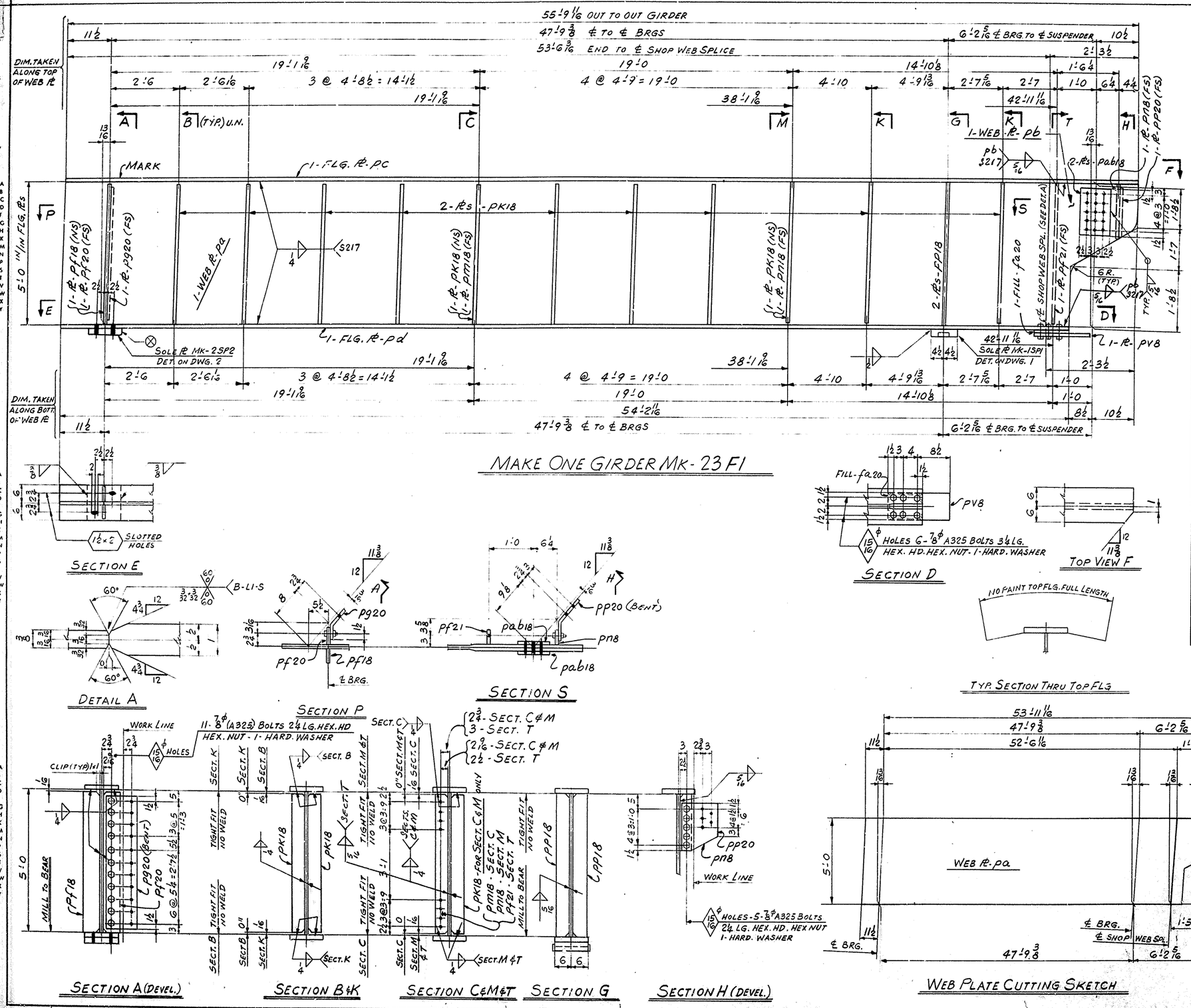

NASHVILLE BRIDGE COMPANY

SHOP ORDER NO. B5725
WORK ORDER NO.
CONTRACT NO. CG736

COMMONWEALTH OF KENTUCKY DEPT. OF HIGHWAYS, BRIDGE
OVER NORTH WESTERN PARKWAY & 22ND ST. JEFFERSON COUNTY.

BILL NO. 23
DRAWING NO. 23

FABRICATION BESSEMER PLANT

WEIGHTS BY CHECKED BY

SHIP	SHIPPING MARK	ITEM QUANT	ASSEMBLY MARK	SHAPE	SECTION	FINISHED LENGTH FT. IN	ORDERED LENGTH FT. IN	PIECE NO.	ITEM NO.	REMARKS	SPLICE WEIGHT	ABC WEIGHT
					MATERIAL ASTM-A36 (U.N.)							
ONE 23F1					GIRDER							
		1	pa	℞	60×3/8	53 7	60×53-10	3908	528	℞-G 4316		5/4
		1	pb	℞	28 5/16×1	5 0		3910	306	MATCH COP LEA ℞ pd84		5/7
		1	pc	℞	12×7/16	55 9 1/16	85+456=6 CUT57	3910	986			5/11
		1	pd	℞	12×7/16	54 2 1/16	858+459=6 CUT57	3910	987			5/12
		1	pf20	℞	5 1/2×1/2	4 11 13/16		STK 3680	406	(MIE)		5/13
		1	pf18	℞	5 1/2×1/2	4 11 13/16		STK 3680	445	(MIE)		5/18
		1	pg20	℞	8 3/4×3/8	4 7		STK 3372	527	(BENT)		5/22
		20	PK18	℞	4×3/8	4 11 13/16		3905	605	(FIE)		5/21
		1	pm18	℞	4×3/8	4 11 13/16		3905	608			5/21
		1	pn18	℞	4×3/8	4 11 13/16		3905	605			5/21
		1	pf21	℞	4×3/8	4 11 13/16		3905	605	(FIE)		5/21
		2	pp18	℞	5 1/2×11/16	5 0		3910	294	(FIE) (MIE)		5/19
		1	pn18	℞	4×3/8	1 6 1/2		3905	605	(FIE)		5/21
		1	pp20	℞	12 3/8×3/8	1 3		STK 3372	438	(BENT)		5/23
		2	pab18	℞	11×3/4	1 3		STK 2674	316			5/25
		1	pv8	℞	7×3/4	1 5		STK 2674	316			5/27
		1	fa20	℞	7×7/16	0 10		3910	323			5/2
		1	2SP2		SOLE ℞					DET. ON DWG 2		
		1	1SP1		SOLE ℞					DET. ON DWG. 1		
		16			7/8φ BOLTS	0 2 1/4		36461	202	(A325) HEX. HD HEX. NUT		
		6			7/8φ BOLTS	0 3 1/4			206	(A325) HEX. HD HEX. NUT		
		22			HARD. WASHERS FOR 7/8φ BOLTS				203	(A325)		

SHEET TOTAL

MATERIAL ASTM-A36 (U.N.)
FOR GENERAL NOTES SEE DWG. GN1
⊗ INDICATES THICKER SIDE OF SOLE ℞

32

GIRDER DETAILS SPAN 1W
BRIDGE OVER NORTHWESTERN PARKWAY & 22ND ST.
DEPARTMENT OF HIGHWAYS COMMONWEALTH OF KENTUCKY
JEFFERSON COUNTY F.A.P. IG4-2(34) & SP56-273 1L
CONTRACTOR MATTINGLY BRIDGE CO.

NASHVILLE BRIDGE COMPANY
NASHVILLE, TENN. BESSEMER PLANT

APPROVED FOR SHOP
NMF 7/15/70 CHIEF DRAFTSMAN
HC 7/15/70 CHIEF ENGINEER
REVISION NOTES
APPL. CHGE. 2/10/70

HOLES 15/16φ OR NOTED
FIELD CONN. 7/8φ H.S.B.
SHOP PAINT SEE DWG. GN1
FIELD

DRAWN BY G.D. DATE 10-28-69
IN CHARGE: GATTI (TENOR)
CHECKED BY VM DATE 12/9/69
DATE PRINTED

BILLS MATERIAL NO. 23
CONT. CG736
S.O. B5725
DRAWING NO. 23

BRIDGE

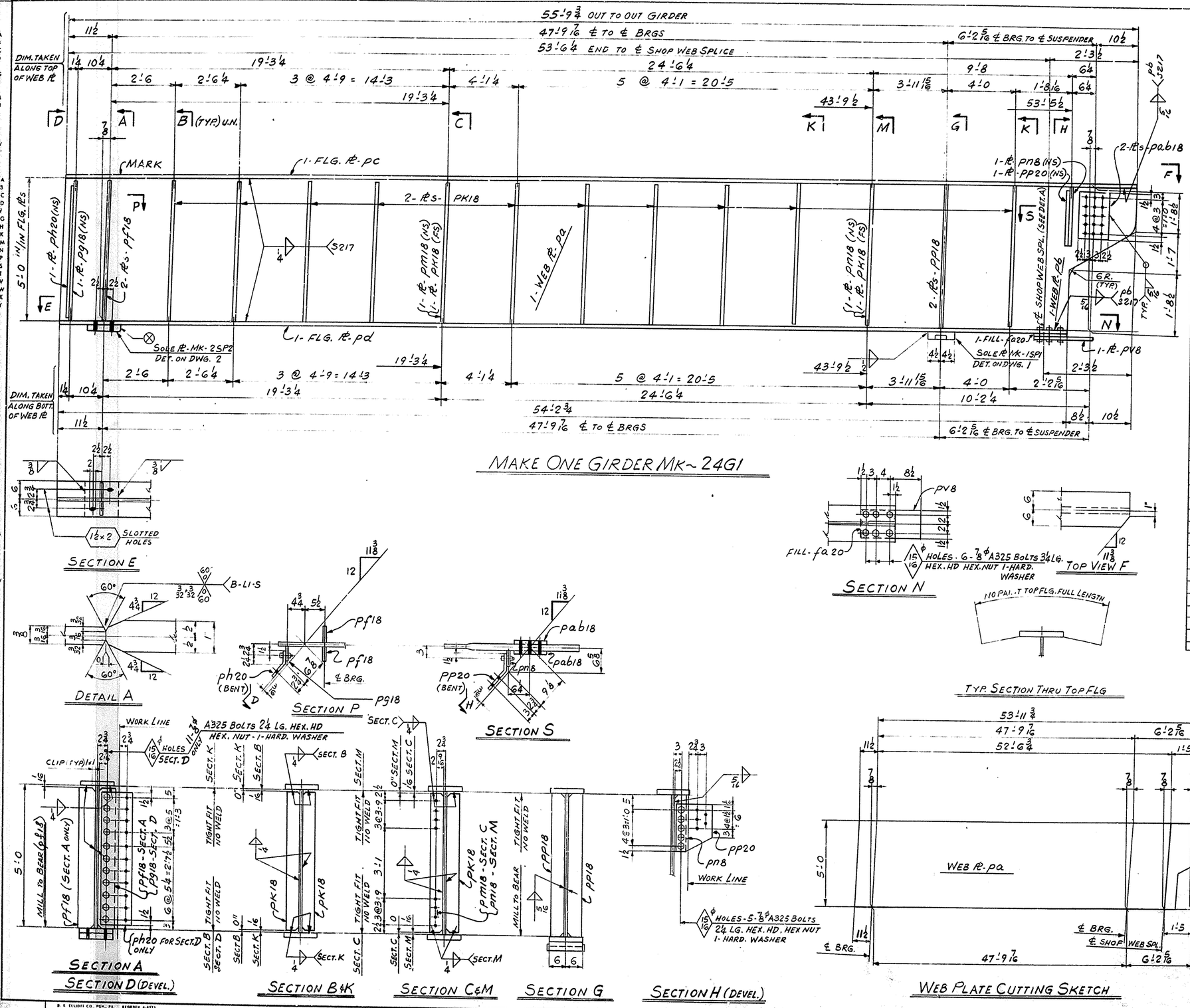

NASHVILLE BRIDGE COMPANY

COMMONWEALTH OF KENTUCKY DEPT. OF HIGHWAYS, BRIDGE OVER NORTH WESTERN PARKWAY & 22ND ST. JEFFERSON COUNTY.

SHOP ORDER NO. B5725 | WORK ORDER NO. | CONTRACT NO. C6736 | BILL NO. 24 | DRAWING NO. 24

FABRICATION BESSEMER PLANT

ITEM SHIP	SHIPPING MARK	ITEM QUANT.	ASSEMBLY MARK	SHAPE	SECTION	FINISHED LENGTH FT. IN.	ORDERED LENGTH FT. IN.	P.O. NO.	ITEM NO.	REMARKS	SPECIF. WEIGHT	AVE. WEIGHT
					MATERIAL ASTM-A36 (U.N.)							
ONE	24G1				GIRDER							
		1	pa	PL	60 x 3/8	53 7/8	60 x 53'-10	3902	822	PL 60 x 3'-6 MATCH CUT LEN. pb & pd25		5/4
		1	pb	PL	28 3/8 x 1	5 0		3910	906			5/7
		1	pc	PL	12 x 1 3/8	55 9 3/4	85 1/2 x 64.0 CUT 7	3910	926			5/11
		1	pd	PL	12 x 1/16	54 2 3/4	85 1/2 x 64.0 CUT 7	3910	927			5/12
		1	ph20	PL	8 x 3/8	4 7		375 3872	527	BENT		5/22
		1	pg18	PL	4 x 3/8	4 11 15/16		3905	605	FIE		5/21
		2	pf18	PL	5 1/2 x 1/2	4 11 15/16		375 3680	406	MIE		5/18
		22	pk18	PL	4 x 3/8	4 11 15/16		3905	605	FIE		5/21
		1	pm18	PL	4 x 3/8	4 11 15/16		3905	605	FIE		5/21
		1	pn18	PL	4 x 3/8	4 11 15/16		3905	605	FIE		5/21
		2	pp18	PL	5 1/2 x 11/16	5 0		3910	234	FIE - MIE		5/19
		1	pn8	PL	4 x 3/8	1 6 1/2		3905	605			5/16
		1	pp20	PL	12 3/8 x 3/8	1 3		375 3372	438	BENT		5/23
		2	pab18	PL	11 x 3/4	1 3		375 2674	316			5/25
		1	pv8	PL	7 x 3/4	1 5		375 2674	316			5/27
		1	fa20	PL	7 x 7/16	0 10		3910	323			5/28
		1	2SP2		SOLE PL					DET. ON DWG. 2		
		1	1SP1		SOLE PL					DET. ON DWG. 1		
		16			7/8 ϕ BOLTS	0 2 1/4		26661	202	(A325) HEX HD		
		6			7/8 ϕ BOLTS	0 3 1/4		"	206	HEX. NUT		
		22			HARD. WASHER FOR 7/8 ϕ BOLTS			26661	203	(A325)		
										SHEET TOTAL		

MATERIAL ASTM-A36 (U.N.)
FOR GENERAL NOTES SEE DWG. GN1
⊗ INDICATES THICKER SIDE OF SOLE PL

33

GIRDER DETAILS SPAN 1E
BRIDGE OVER NORTHWESTERN PARKWAY & 22ND ST.
DEPARTMENT OF HIGHWAYS COMMONWEALTH OF KENTUCKY
JEFFERSON COUNTY F.A.P. 164-2(34)1; SP 56.273 1IL
CONTRACTOR MATTINGLY BRIDGE CO.

NASHVILLE BRIDGE COMPANY
NASHVILLE, TENN.
BESSEMER PLANT

APPROVED FOR SHOP: WMF 7/15/70 CHIEF DRAFTSMAN; HAC 7/15/70 CHIEF ENGINEER
REVISION NOTES: APPL. CHGE. 7/10/70
HOLES: 15/16 ϕ OR NOTED
FIELD CONN.: 7/8 ϕ H.S.B.
SHOP PAINT: SEE DWG. GN1
FIELD:
DRAWN BY: G.D. DATE: 10-29-69
IN CHARGE: GATTI (TENSOR)
CHECKED BY: VM DATE: 12/9/69
DATE PRINTED:

BILLS MATERIAL NO.	CONT. C6736	DRAWING NO.
24	S.O. B5725	24

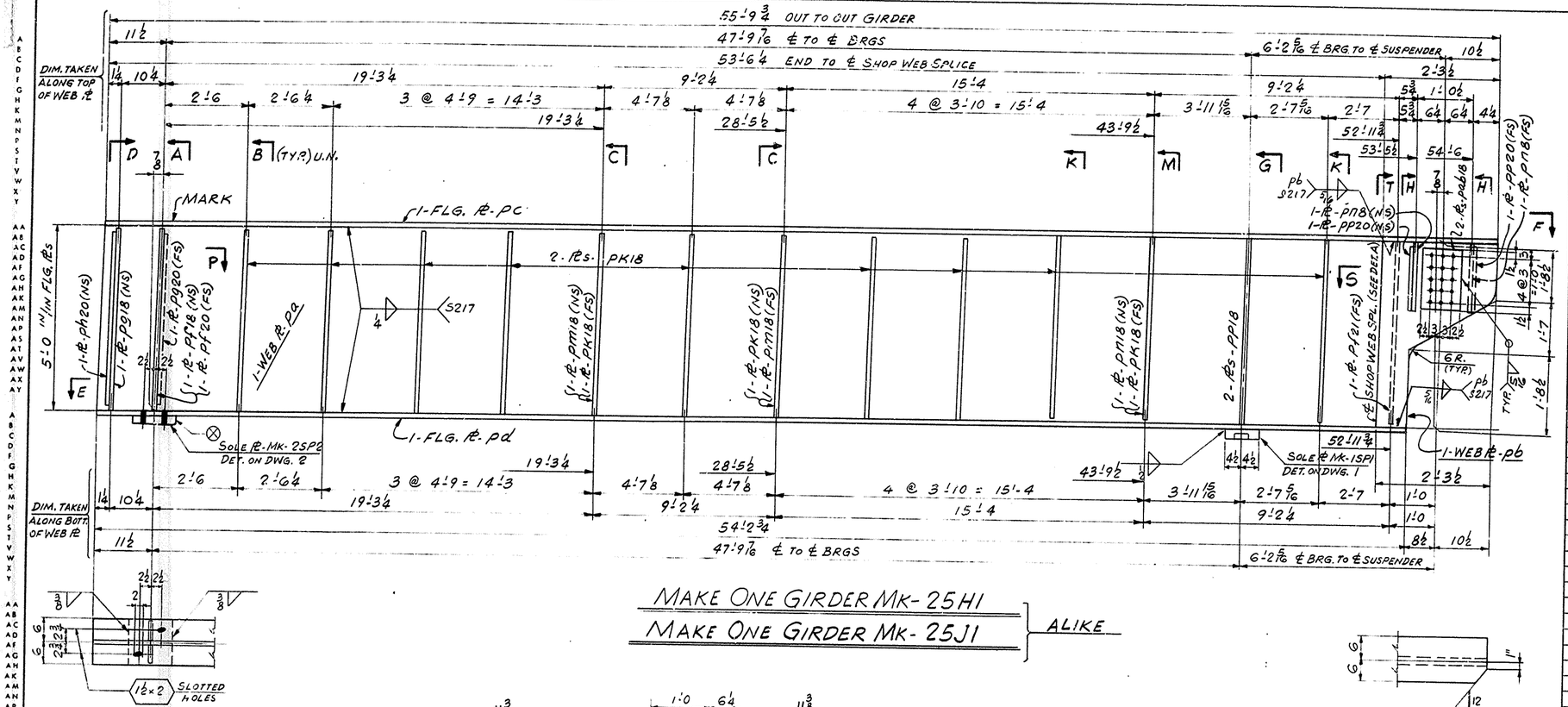

MATERIAL ASTM-A36 (U.N.)
FOR GENERAL NOTES SEE DWG. GN1
⊗ INDICATES THICKER SIDE OF SOLE ℞

34

NASHVILLE BRIDGE COMPANY

SHOP ORDER NO. B5725
WORK ORDER NO.
CONTRACT NO. CG736
BILL NO. 25
DRAWING NO. 25

COMMONWEALTH OF KENTUCKY DEPT. OF HIGHWAYS, BRIDGE
OVER NORTH WESTERN PARKWAY & 22ND ST. JEFFERSON COUNTY.

FABRICATION BESSEMER PLANT

ITEM
WEIGHTS BY
CHECKED BY

PCS.	SHIPPING MARK	ITEM QUANT.	ASSEMBLY MARK	SHAPE	SECTION	FINISHED LENGTH FT.	FINISHED LENGTH IN.	ORDERED LENGTH FT.	ORDERED LENGTH IN.	P.O. NO.	ITEM NO.	REMARKS	SPECIF. WEIGHT	A.T.&C. WEIGHT
					MATERIAL ASTM-A36 (U.N.)									
ONE 25H1					GIRDER									
ONE 25J1					GIRDER									
		2	pa	℞	60×3/8	53	7/8	60×	53'-10	3908	528	℞ 61×3'-6 MATCH CUT, PA61 & CUT, PB61 (pd11)		5/4
		2	pb	℞	28 3/8×1	5	0			3910	806			5/7
		2	pc	℞	12×7/16	55	9 3/4	85'-5 5/8	60'-9 7/8	3910	526			5/11
		2	pd	℞	12×7/16	54	2 3/4	85'-5 5/8	60'-9 7/8	3910	527			5/12
		2	ph20	℞	8×3/8	4	7			STK 3372	527	(BENT)		5/22
		2	p918	℞	4×3/8	4	11 1/16			3905	605	(FIE)		5/21
		2	pf18	℞	5½×½	4	11 1/16			STK 3680	406	(MIE)		5/11
		2	pf20	℞	5½×½	4	11 1/16			STK 3680	406	(MIE)		5/11
		2	pg20	℞	8¾×3/8	4	7			STK 3372	527	(BENT)		5/23
		42	pk18	℞	4×3/8	4	11 1/16			3905	605	(FIE)		5/24
		4	pm18	℞	4×3/8	4	11 1/16							
		2	pn18	℞	4×3/8	4	11 1/16							
		2	pf21	℞	4×3/8	4	11 1/16			3905	605	(FIE)		5/21
		4	pp18	℞	5½×1/16	5	0			3910	206	(MIE) (FIE)		5/19
		4	pn8	℞	4×3/8	1	6½			3905	605			5/26
		4	pp20	℞	12 3/8×3/8	1	3			STK 3372	432	BENT		5/23
		4	pab18	℞	11×¾	1	3			STK 2654	316			5/25
		2	2SP2		SOLE ℞							DET. ON DWG. 2		
		2	1SP1		SOLE ℞							DET. ON DWG. 1		
		64			7/8ϕ BOLTS	0	2¼			Bundle 1	202	(A325) HEX. HD & HEX. NUT		
		64			HARD. WASHERS FOR 7/8ϕ BOLTS						203	(A325)		
												SHEET TOTAL		

APPROVED FOR SHOP
HMF 7/16/70 CHIEF DRAFTSMAN
JMC 7/16/70 CHIEF ENGINEER
REVISION NOTES
Appl. Chg. 2/19/70

GIRDER DETAILS SPAN 1E
BRIDGE OVER NORTHWESTERN PARKWAY ℄ 22ND ST.
DEPARTMENT OF HIGHWAYS COMMONWEALTH OF KENTUCKY
JEFFERSON COUNTY F.A.P. IG4-2(34)1; S.P. 86-273 1L
CONTRACTOR MATTINGLY BRIDGE CO.

NASHVILLE BRIDGE COMPANY
NASHVILLE, TENN.
BESSEMER PLANT

HOLES 15/16 ϕ OR NOTED
FIELD CONN. 7/8 ϕ H.S.B.
SHOP PAINT SEE DWG. GN1
FIELD
DRAWN BY G.D. DATE 10-29-69
IN CHARGE: GATTI (TENSOR)
CHECKED BY JM DATE 12/9/65
DATE PRINTED

BILLS MATERIAL NO. 25
CONT. CG736
S.O. B5725
DRAWING NO. 25

B. K. ELLIOTT CO. PGH. PA. REORDER A-8373

BRIDGE

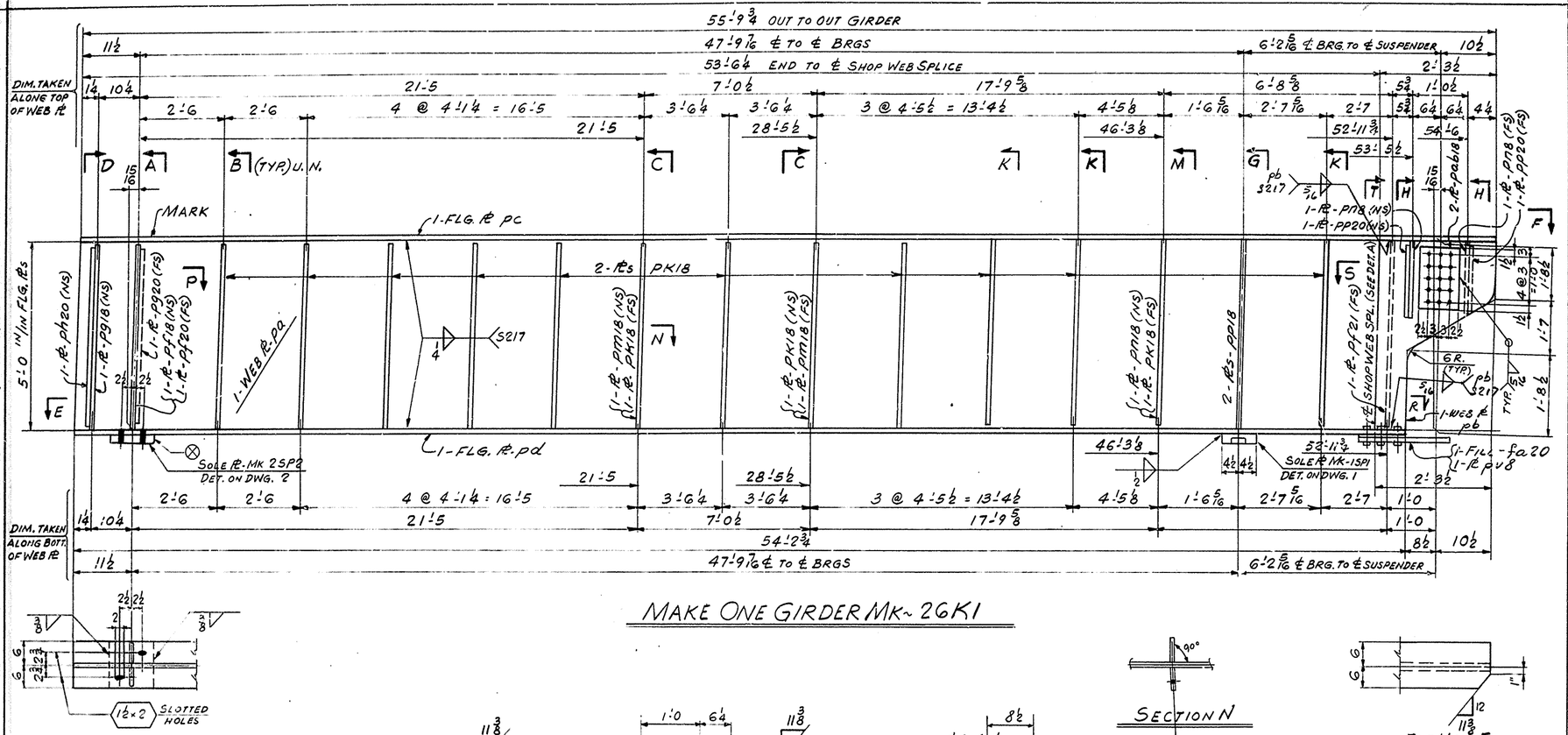

MAKE ONE GIRDER MK-26K1

SECTION E

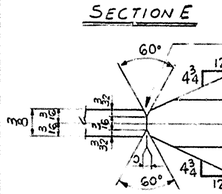

DETAIL A

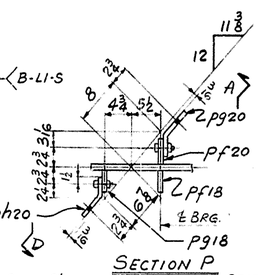

SECTION P

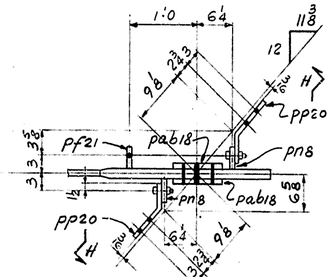

SECTION S

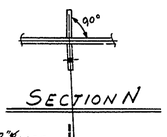

SECTION N

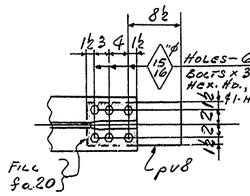

SECTION R

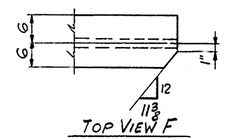

TOP VIEW F

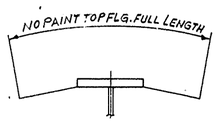

TYP. SECTION THRU TOP FLG

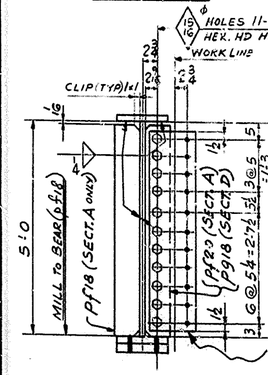

SECTION D (DEVEL.)

SECTION A (DEVEL.)

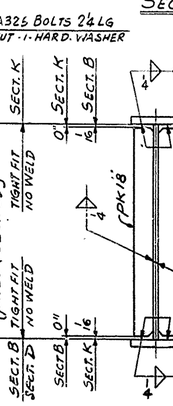

SECTION B&K

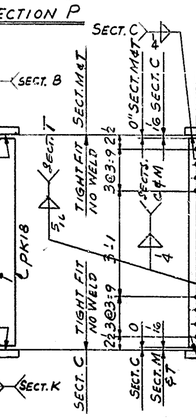

SECTION C&M&T

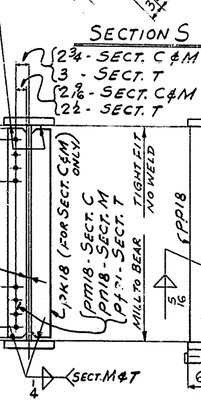

SECTION G

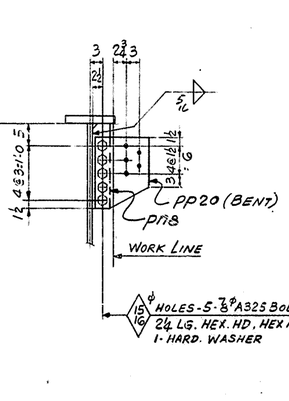

SECTION H (DEVEL.)

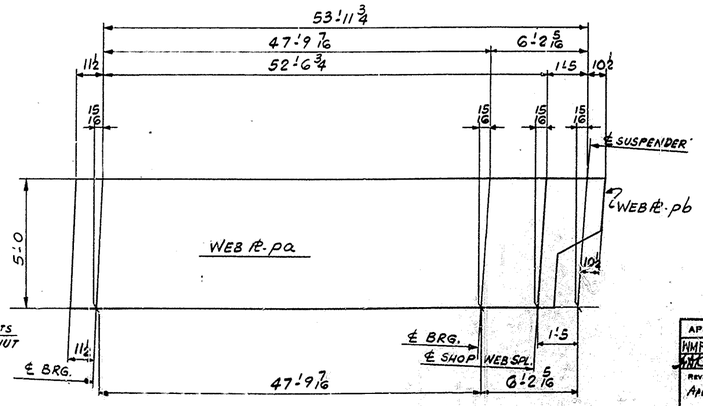

WEB PLATE CUTTING SKETCH

NASHVILLE BRIDGE COMPANY

SHOP ORDER NO. B5725
WORK ORDER NO.
CONTRACT NO. CG736

COMMONWEALTH OF KENTUCKY DEPT. OF HIGHWAYS, BRIDGE
OVER NORTH WESTERN PARKWAY & 22ND ST. JEFFERSON COUNTY.

FABRICATION BESSEMER PLANT

BILL NO. 26
DRAWING NO. 26

WEIGHTS BY
CHECKED BY

SHIP	SHIPPING MARK	ITEM QUANT.	ASSEMBLY MARK	SHAPE	SECTION	FURNISHED LENGTH FT.	FURNISHED LENGTH IN.	OPPOSITE LENGTH FT.	OPPOSITE LENGTH IN.	P.O. NO.	ITEM NO.	REMARKS	SPECIF. WEIGHT	A.S.B.C. WEIGHT
					MATERIAL A571M-A36 (U.N.)									
ONE	26K1				GIRDER									
		1	pa	PL	60 x 3/8	53	7 1/16	60 x 53 1/16		3908	520	PG 1 x 3-6 MATCH CUT 1 EA pb & pd TS		
		1	pb	PL	28 1/16 x 1	5	0			3910	306			
		1	pc	PL	12 x 7/16	55	9 3/4	55 3/4 x 5 5/16 CUT 2		3910	326			
		1	pd	PL	12 x 7/16	54	2 3/4	55 1/4 x 5 5/16 CUT 2		3910	327			
		1	ph20	PL	8 x 3/8	4	7			3772 3772	527	(BENT)		
		1	pg18	PL	4 x 3/8	4	11 15/16			3905	605	(FIE)		
		1	pg20	PL	8 3/4 x 3/8	4	7			3772 3772	527	(BENT)		
		1	pf18	PL	5 1/2 x 1/2	4	11 15/16			3776 3940	406	(MIE)		
		1	pf20	PL	5 1/2 x 1/2	4	11 15/16			3776 3940	406	(MIE)		
		23	pk18	PL	4 x 3/8	4	11 15/16			3905	605	(FIE)		
		2	pm18	PL	4 x 3/8	4	11 15/16					(FIE)		
		1	pn18	PL	4 x 3/8	4	11 15/16			3905	605	(FIE)		
		2	pp18	PL	5 1/2 x 1/16	5	0			3910	234	(FIE)(MIE)		
		2	pn8	PL	4 x 3/8	1	6 1/2			3905	605			
		2	pp20	PL	12 3/8 x 3/8	1	3			3772 3772	438	(BENT)		
		2	pab18	PL	11 x 3/4	1	3			3776 2678	346			
		1	pf21	PL	4 x 3/8	4	11 15/16			3905	605	(FIE)		
		1	2SP2		SOLE PL							DET. ON DWG. 2		
		1	1SP1		SOLE PL							DET. ON DWG. 1		
		6			7/8" Bolts	0	3 1/4			2466	1067			
		32			7/8" Bolts	0	2 1/4					(A325) HEX. HD HEX. NUT		
		38			HARD. WASHER FOR 7/8" BOLTS							(A325)		
		1	pv8	PL	7 x 1/2	1	5			3776 2672	316			
		1	fa20	PL	7 x 9/16	0	10			3910	323			
												SHEET TOTAL		

MATERIAL ASTM-A36 (U.N.)
FOR GENERAL NOTES SEE DWG. GN1
⊗ INDICATES THICKER SIDE OF SOLE PL

35

GIRDER DETAILS SPAN 1E
BRIDGE OVER NORTHWESTERN PARKWAY & 22ND ST.
DEPARTMENT OF HIGHWAYS COMMONWEALTH OF KENTUCKY
JEFFERSON COUNTY F.A.P. I 64-2(34) I; SP 56-273 IIL
CONTRACTOR MATTINGLY BRIDGE CO.

NASHVILLE BRIDGE COMPANY
NASHVILLE, TENN.
BESSEMER PLANT

APPROVED FOR SHOP
CHIEF DRAFTSMAN
CHIEF ENGINEER
REVISION NOTES
APPL. CHGS. 7/10/70

HOLES 5/16 ϕ OR NOTED
FIELD CONN. 7/8 ϕ H.S.B.
SHOP PAINT SEE DWG GN1
FIELD

DRAWN BY G.D. DATE 10-30-69
IN CHARGE GATTI
CHECKED BY V.H. DATE 12/1/69
DATE PRINTED

BILL MATERIAL NO. 26
CONT. CG736
S.O. B5725
DRAWING NO. 26

B. K. ELLIOTT CO., PGH., PA. REORDER A-6573

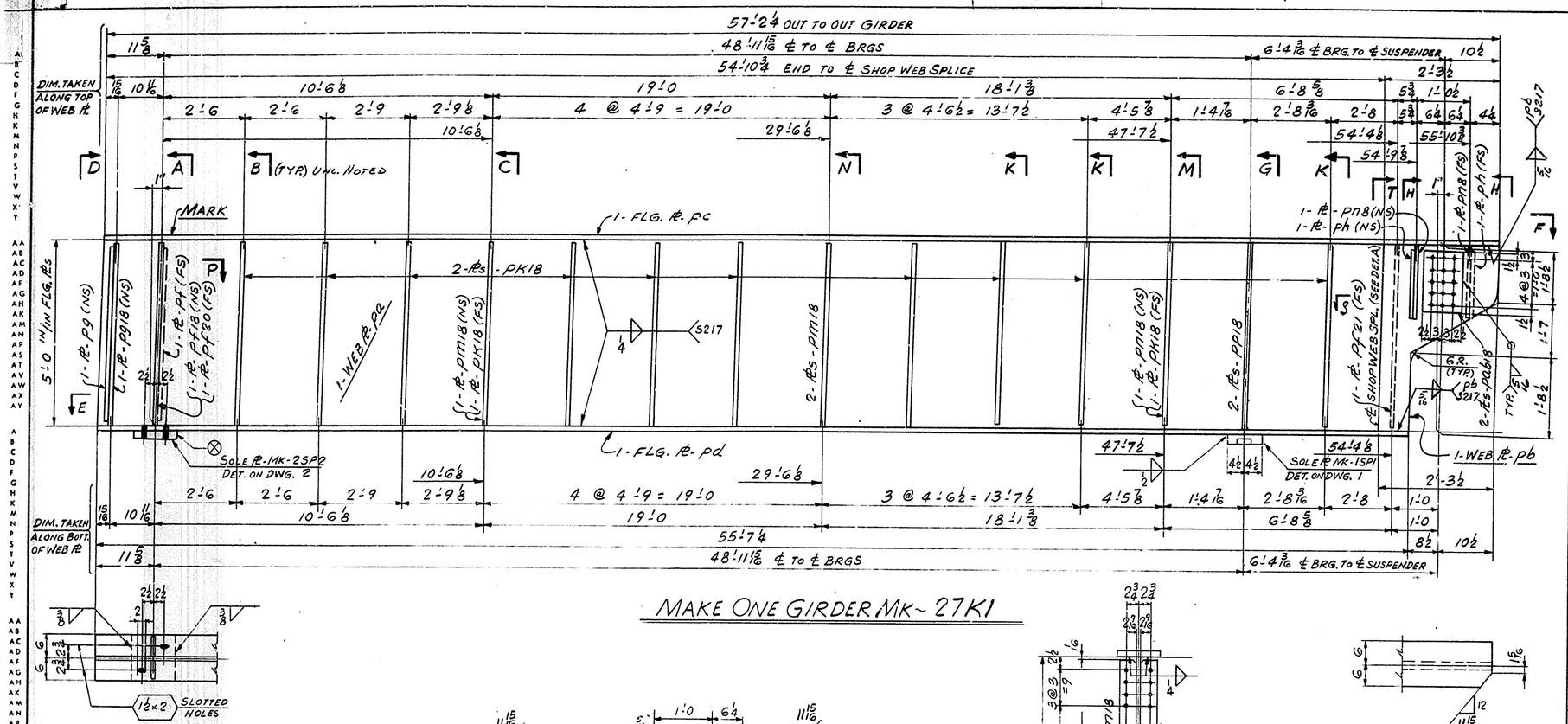

MAKE ONE GIRDER MK-27K1

SECTION E

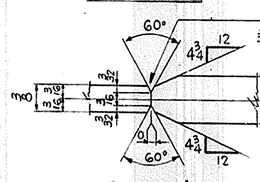

DETAIL A

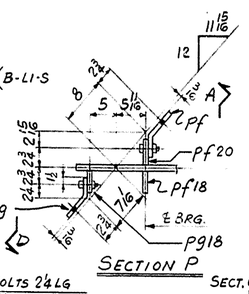

SECTION P

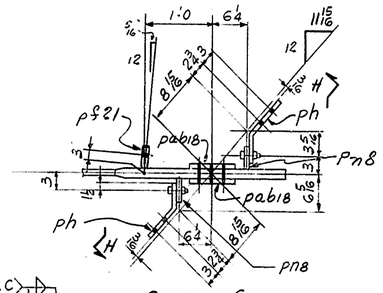

SECTION S

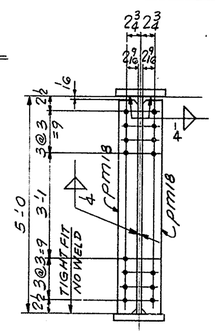

SECTION N

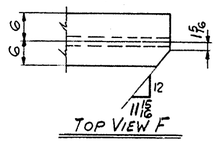

TOP VIEW F

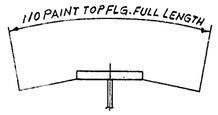

TYP. SECTION THRU TOP FLG

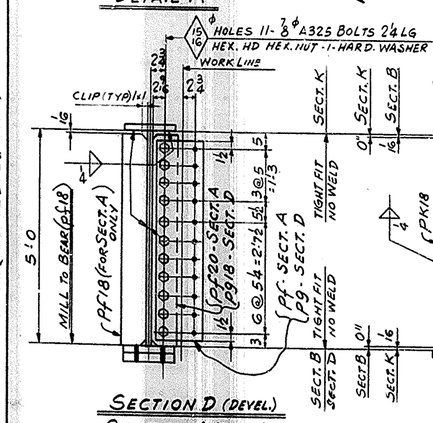

SECTION D (DEVEL.)

SECTION A (DEVEL.)

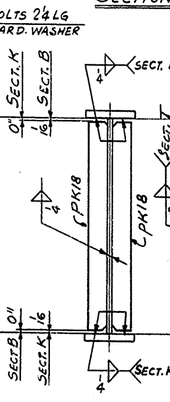

SECTION B&K

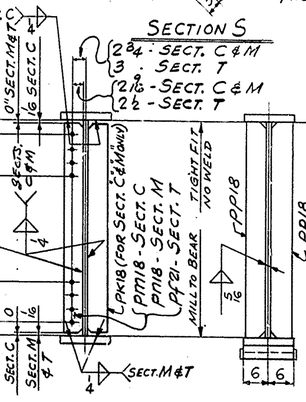

SECTION C&M&T

SECTION G

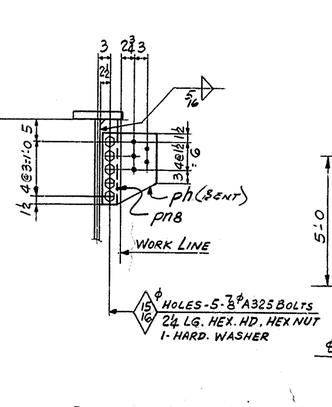

SECTION H (DEVEL.)

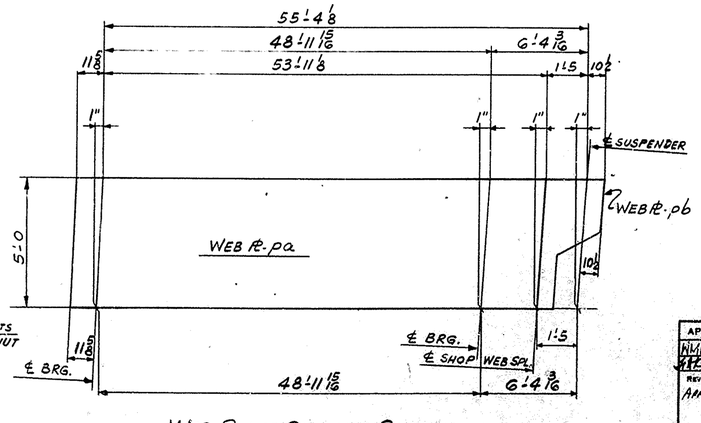

WEB PLATE CUTTING SKETCH

MATERIAL ASTM-A36 (U.N.)
FOR GENERAL NOTES SEE DWG. GN1
⊗ INDICATES THICKER SIDE OF SOLE ℞

36

NASHVILLE BRIDGE COMPANY

SHOP ORDER NO. B5725
WORK ORDER NO.
CONTRACT NO. C6736
ITEM

COMMONWEALTH OF KENTUCKY DEPT. OF HIGHWAYS, BRIDGE
OVER NORTH WESTERN PARKWAY & 22ND ST. JEFFERSON COUNTY.

FABRICATION BESSEMER PLANT

BILL NO. 27
DRAWING NO. 27

WEIGHTS BY
CHECKED BY

SHIP	SHIPPING MARK	ITEM QUANT.	ASSEMBLY MARK	SUFFIX	SECTION	FURNISHED LENGTH FT. IN.	ORDERED LENGTH FT. IN.	P.O. NO.	ITEM NO.	REMARKS	SPECIF. WEIGHT	A.I.S.C. WEIGHT	
					MATERIAL ASTM-A36 (U.N.)								
ONE	27K1				GIRDER								
		1	pa	℞	60 × ⅜	54 11¾	60 × 55-12	3908	521	~~℞ CL 1'6~~			5/5
		1	pb	℞	28½ × 1	5 0		3910	306	MATCH CUT			5/7
		1	pc	℞	12 × 7/16	57 2¼	85½ CO'S 78 1/2	3910	325	~~℞ PD & PD7G~~			5/13
		1	pd	℞	12 × 7/16	55 7¼	85½ × 56-6 CUTS 7	3910	326				5/14
		1	pg	℞	8 × ⅜	4 7		STK 2372	527	(BENT)			5/22
		1	pg18	℞	4 × ⅜	4 11 15/16		3905	605	(F1E)			5/21
		1	pf	℞	8¾ × ⅜	4 7		STK 2372	527	(BENT)			5/22
		1	pf18	℞	5½ × ½	4 11 15/16		STK 3680	406	(1-M1E)			5/18
		1	pf20	℞	5½ × ½	4 11 15/16		STK 3680	406	(1-M1E)			5/18
		22	pk18	℞	4 × ⅜	4 11 15/16		3905	605	(F1E)			5/21
		3	pm18	℞	4 × ⅜	4 11 15/16		3905	605	(F1E)			5/21
		1	pn18	℞	4 × ⅜	4 11 15/16		3905	605	(F1E)			5/21
		2	pp18	℞	5½ × 11/16	5 0		3910	234	(1-M1E) (F1E)			5/19
		1	pf21	℞	4 × ⅜	4 11 15/16		3905	605	(F1E)			5/21
		2	pn8	℞	4 × ⅜	1 6½		3905	605				5/26
		2	ph	℞	12⅛ × ⅜	1 3		STK 3372	438	(BENT)			5/20
		2	pab18	℞	11 × ¾	1 3		STK 2678	316				5/15
		1	2SP2		SOLE ℞					DET. ON DWG. 2			
		1	1SP1		SOLE ℞					DET. ON DWG. 1			
		32			⅞ϕ BOLTS	0 2¼		2666	282	(A325) HEX. HD			
		32			HARD WASHERS FOR ⅞ϕ BOLTS			1	293	(A325) HEX. NUT			
										SHEET TOTAL			

GIRDER DETAILS SPAN 1E
BRIDGE OVER NORTHWESTERN PARKWAY & 22ND ST.
DEPARTMENT OF HIGHWAYS COMMONWEALTH OF KENTUCKY
JEFFERSON COUNTY F.A.P. I64-2(34)1; SP56-273 1IL
CONTRACTOR MATTINGLY BRIDGE CO.

NASHVILLE BRIDGE COMPANY
NASHVILLE, TENN.
BESSEMER PLANT

APPROVED FOR SHOP
CHIEF DRAFTSMAN
CHIEF ENGINEER
REVISION NOTES
APPL. CHGS. 3/10/70

HOLES 15/16 ϕ OR NOTED
FIELD CONN. ⅞ϕ H.S.B.
SHOP PAINT SEE DWG GN1
FIELD

DRAWN BY G.D. DATE 10-30-69
IN CHARGE: GATTI (TENSOR)
CHECKED BY VM DATE 12/3/69
DATE PRINTED

BILLS MATERIAL NO. 27
CONT. C6736
S.O. B5725
DRAWING NO. 27

BRIDGE

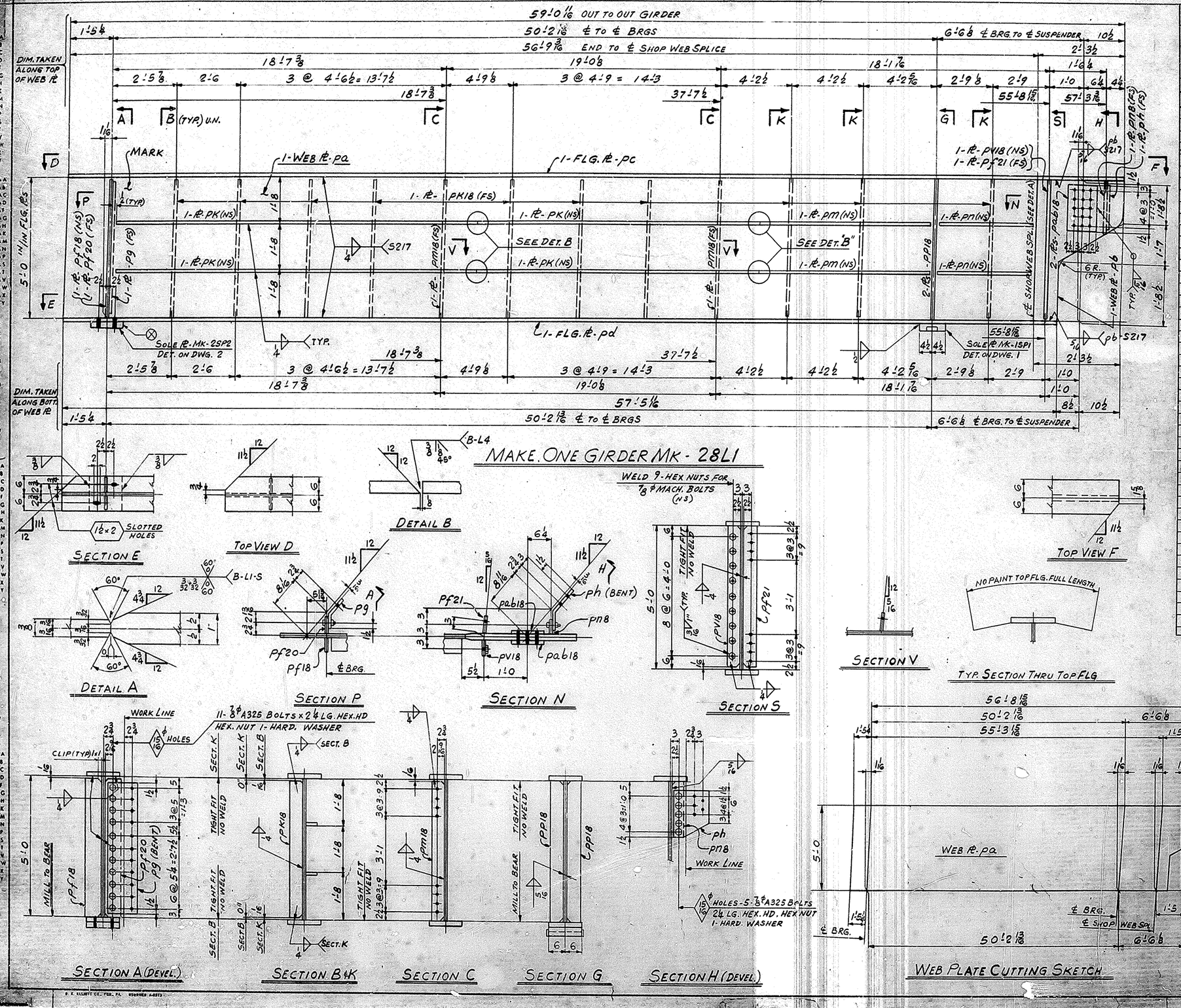

NASHVILLE BRIDGE COMPANY

SHOP ORDER NO. B5725
WORK ORDER NO.
CONTRACT NO. CG736

COMMONWEALTH OF KENTUCKY DEPT. OF HIGHWAYS, BRIDGE
OVER NORTH WESTERN PARKWAY & 22ND ST. JEFFERSON COUNTY.

FABRICATION BESSEMER PLANT

BILL NO. 28
DRAWING NO. 28

ITEM	SHOP	SHIPPING MARK	ITEM QUANT.	ASSEMBLY MARK	SHAPE	SECTION	FINISHED LENGTH FT. IN.	ORDERED LENGTH FT. IN.	P.O. NO.	ITEM NO.	REMARKS	WEIGHTS BY / CHECKED BY	SPECIF. WEIGHT	A B C WEIGHT
						MATERIAL ASTM-A36 (U.N.)								
ONE 28L1						GIRDER								
			1	pa	℞	60 x 3/8	56 10 1/2	60 x 57'-1	3908	520				516
			1	pb	℞	28 5/16 x 1	5 0		3910	306	℞ 21 x 3/16 MATCH CUT ITEM pb & pc (?)			5/7
			1	pc	℞	12 x 9/16	59 0 1/16	65 1/2 CUT 2 @ 12	3910	325				5/15
			1	pd	℞	12 x 9/16	57 5 1/16		3910	325				5/16
			1	pp18	℞	5 1/2 x 1/2	4 11 1/8		3910 406		(MIE)			5/18
			1	pf20	℞	5 1/2 x 1/2	4 11 1/8		3910 406		(MIE)			5/18
			1	pg	℞	8 3/8 x 3/8	4 7		375 3378	827	(BENT)			5/22
			10	pk18	℞	4 x 3/8	4 11 1/8		3945 605		(FIE)			5/24
			2	pm18	℞	4 x 3/8	4 11 1/8		3945 605		(FIE)			5/24
			2	pp18	℞	5 1/2 x 11/16	5 0		3910 234		(MIE) (FIE)			5/11
			1	pv18	℞	4 x 3/8	4 11 1/8		3945 605		(FIE)			5/24
			1	pf21	℞	4 x 3/8	4 11 1/8		3945 605		(FIE)			5/24
			1	pn8	℞	4 x 3/8	1 6 1/2		3945 605					5/26
			1	ph	℞	11 3/4 x 3/8	1 3		375 3378	828	(BENT)			5/23
			2	pab18	℞	11 x 3/4	1 3		2675	304				5/25
			4	PK	℞	4 x 3/8	20 0		3945	605				5/1
			2	pm	℞	4 x 3/8	10 0 3/8		3945	605				5/2
			2	pn	℞	4 x 3/8	4 11 1/8		3945	605				5/6
			16			7/8φ BOLTS HARD. WASHER FOR 7/8φ BOLTS	0 2 1/4		2441	202	(A325) HEX. HD. HEX. NUT.			
			16							203	(A325)			
			9			7/8φ HEX. NUT				STK.	(A307)			
			1	2SP2		SOLE ℞					DET. ON DWG. 2			
			1	1SP1		SOLE ℞					DET. ON DWG. 1			
											SHEET TOTAL			

MATERIAL ASTM-A36 (U.N.)
FOR GENERAL NOTES SEE DWG. GN1
⊗ INDICATES THICKER SIDE OF SOLE ℞

37

GIRDER DETAILS SPAN 1E
BRIDGE OVER NORTHWESTERN PARKWAY & 22ND ST.
DEPARTMENT OF HIGHWAYS COMMONWEALTH OF KENTUCKY
JEFFERSON COUNTY F.A.P. I 64-2(36); SP 56-273 1L
CONTRACTOR MATTINGLY BRIDGE CO.

NASHVILLE BRIDGE COMPANY
NASHVILLE, TENN.
BESSEMER PLANT

APPROVED FOR SHOP
WWE 10/5/70 CHIEF DRAFTSMAN
HHC 10/5/70 CHIEF ENGINEER
REVISION NOTES
APPL. CHGS. 3/14/00

DRAWN BY G.D. DATE 10-31-69
IN CHARGE J. SATTLER
FIELD CHGS. 7/8φ H.S.B.
SHOP PLAN SEE DWG GN1
FIELD
CHECKED BY V.M. DATE 12/9/69
DATE PRINTED

BILL OF MATERIAL NO. 28
CONT. CG736
S.O. B5725
28

BRIDGE

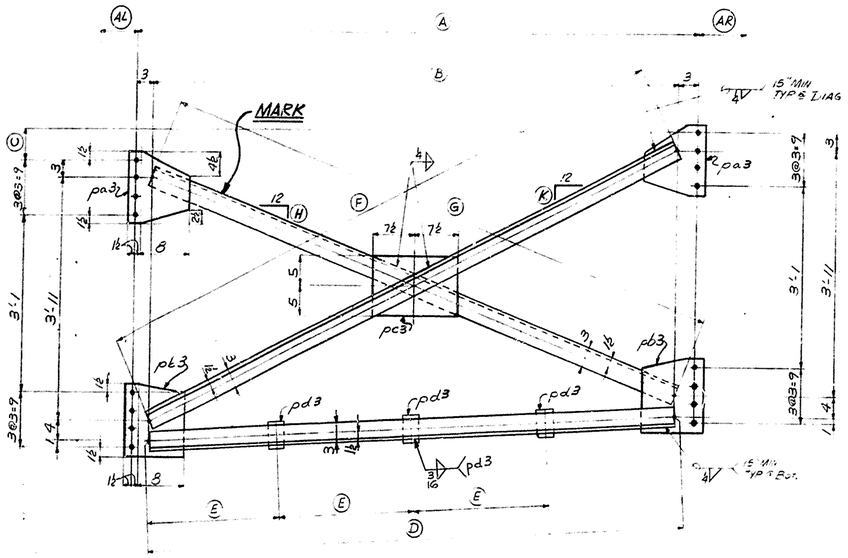

CROSS FRAMES 29CF17 to 29CF24 (INCL.)
(SEE TABLE BELOW FOR DIM.)

MARK	REQ'D	(A)	(B)	(C)	(D)	(E)	(F)	(G)	(H)	(K)	(AL)	(AR)
29CF17	ONE	4'-9 3/16	4'-3 3/16	1 15/16	4'-3 3/16 (aa)	1'-0 3/4	5'-10 13/16 (ab)	5'-8 3/16 (ac)	10 9/16	11 1/2	2 3/4	2 3/4
29CF18	ONE	4'-5 3/8	3'-11 3/8	1 13/16	3'-11 3/8 (ad)	11 3/4	5'-8 (af)	5'-5 7/16 (ag)	11 7/16	12		
29CF19	ONE	6'-4 7/16	5'-10 7/16	2 9/16	5'-10 7/16 (ah)	1'-5 1/2	7'-2 1/8 (ak)	6'-11 1/4 (am)	7 9/16	8 7/16		
29CF20	ONE	6'-1 9/16	5'-7 9/16	2 1/2	5'-7 9/16 (an)	1'-4 3/4	6'-11 11/16 (ap)	6'-8 7/8 (as)	7 15/16	8 13/16		
29CF21	ONE	5'-7 3/4	5'-1 3/4	2 5/16	5'-1 3/4 (at)	1'-3 1/4	6'-7 (av)	6'-4 3/16 (aw)	8 11/16	9 9/16		
29CF22	ONE	5'-0 5/16	4'-6 5/16	2 1/16	4'-6 5/16 (ax)	1'-1 1/2	6'-1 3/16 (ay)	5'-10 1/2 (aab)	9 15/16	10 13/16		
29CF23	11	9'-5 9/16	8'-11 9/16	3 11/16	8'-11 9/16 (aac)	2'-2 3/4	9'-10 3/8 (aad)	9'-7 7/8 (aaf)	4 13/16	5 11/16		
29CF24	ONE	9'-5 9/16	8'-11 9/16	3 7/16	8'-11 9/16 (aac)	2'-2 3/4	9'-10 3/4 (aag)	9'-8 (aah)	4 7/8	5 5/8	2 3/4	2 3/4

NASHVILLE BRIDGE COMPANY

SHOP ORDER NO. B-5727 | WORK ORDER NO. | CONTRACT NO. C6736 | ITEM

COMMONWEALTH OF KENTUCKY, DEPT. OF HIGHWAYS, BRIDGE
OVER NORTHWESTERN PKWY & 22ND ST., JEFFERSON COUNTY

FABRICATION BESSEMER PLANT

BILL NO. 29A | DRAWING NO. 29

WEIGHTS BY | CHECKED BY

MAT'L ASTM A36

ONE 29CF17 Cross Frame
2 aa L 3x2½x5/16 4 3 3/16 3905 132
1 ab L 3½x3x3/8 5 10 13/16 3943 130
1 ac L 3½x3x3/8 5 8 3/16 ↓ 130
2 pa3 PL 11x3/8 1 0 90 cuts @ 11 3909 409
2 pb3 PL 11x3/8 1 0 ↓ 409
1 pc3 PL 10x3/8 1 3 82x38-3 cuts 240 ↓ 412
3 pd3 BR 1/2x3/8 0 3 3/4 STK 686 606

ONE 29CF18 Cross Frame
2 ad L 3x2½x5/16 3 11 3/8 3905 132
1 af L 3½x3x3/8 5 8 3943 130
1 ag L 3½x3x3/8 5 5 7/16 ↓ 130
2 pa3 PL 11x3/8 1 0 90 cuts @ 11 3909 409
2 pb3 PL 11x3/8 1 0 ↓ 409
1 pc3 PL 10x3/8 1 3 82x38-3 cuts 240 ↓ 412
3 pd3 BR 1/2x3/8 0 3 3/4 STK 686 606

ONE 29CF19 Cross Frame
2 ah L 3x2½x5/16 5 10 9/16 3905 132
1 ak L 3½x3x3/8 7 2 1/8 3943 130
1 am L 3½x3x3/8 6 11 1/4 ↓ 130
2 pa3 PL 11x3/8 1 0 90 cuts @ 11 3909 409
2 pb3 PL 11x3/8 1 0 ↓ 409
1 pc3 PL 10x3/8 1 3 82x38-3 cuts 240 ↓ 412
3 pd3 BR 1/2x3/8 0 3 3/4 STK 686 606

ONE 29CF20 Cross Frame
2 an L 3x2½x5/16 5 7 9/16 3905 132
1 ap L 3½x3x3/8 6 11 7/16 3943 130
1 as L 3½x3x3/8 6 8 7/8 ↓ 130
2 pa3 PL 11x3/8 1 0 90 cuts @ 11 3909 409
2 pb3 PL 11x3/8 1 0 ↓ 409
1 pc3 PL 10x3/8 1 3 82x38-3 cuts 240 ↓ 412
3 pd3 BR 1/2x3/8 0 3 3/4 STK 686 606

SHEET TOTAL

NASHVILLE BRIDGE COMPANY

SHOP ORDER NO. B-5727 | WORK ORDER NO. | CONTRACT NO. C6736 | ITEM

COMMONWEALTH OF KENTUCKY, DEPT. OF HIGHWAYS, BRIDGE
OVER NORTHWESTERN PKWY & 22ND ST., JEFFERSON COUNTY

FABRICATION BESSEMER PLANT

BILL NO. 29B | DRAWING NO. 29

WEIGHTS BY | CHECKED BY

MAT'L ASTM A36

ONE 29CF21 Cross Frame
2 at L 3x2½x5/16 5 1 3/8 3905 132
1 av L 3½x3x3/8 6 7 3943 130
1 aw L 3½x3x3/8 6 4 3/8 ↓ 130
2 pa3 PL 11x3/8 1 0 90 cuts @ 11 3909 409
2 pb3 PL 11x3/8 1 0 ↓ 409
1 pc3 PL 10x3/8 1 3 82x38-3 cuts 240 ↓ 412
3 pd3 BR 1/2x3/8 0 3 3/4 STK 686 606

ONE 29CF22 Cross Frame
2 ax L 3x2½x5/16 4 6 9/16 3905 132
1 ay L 3½x3x3/8 6 1 3/8 3943 130
1 aab L 3½x3x3/8 5 10 1/2 ↓ 130
2 pa3 PL 11x3/8 1 0 90 cuts @ 11 3909 409
2 pb3 PL 11x3/8 1 0 ↓ 409
1 pc3 PL 10x3/8 1 3 82x38-3 cuts 240 ↓ 412
3 pd3 BR 1/2x3/8 0 3 3/4 STK 686 606

11 29CF23 Cross Frame
22 aac L 3x2½x5/16 8 11 3/8 3905 132
11 aad L 3½x3x3/8 9 10 1/2 3943 130
11 aaf L 3½x3x3/8 9 7 1/8 ↓ 130
22 pa3 PL 11x3/8 1 0 90 cuts @ 11 3909 409
22 pb3 PL 11x3/8 1 0 ↓ 409
11 pc3 PL 10x3/8 1 3 82x38-3 cuts 240 ↓ 412
33 pd3 BR 1/2x3/8 0 3 3/4 STK 686 606

ONE 29CF24 Cross Frame
2 aac L 3x2½x5/16 8 11 3/8 3905 132
1 aag L 3½x3x3/8 9 10 3/4 3943 130
1 aah L 3½x3x3/8 9 8 ↓ 130
2 pa3 PL 11x3/8 1 0 90 cuts @ 11 3909 409
2 pb3 PL 11x3/8 1 0 ↓ 409
1 pc3 PL 10x3/8 1 3 82x38-3 cuts 240 ↓ 412
3 pd3 BR 1/2x3/8 0 3 3/4 STK 686 606

SHEET TOTAL

38

FOR GENERAL NOTES SEE DWG GN1
MAT'L ASTM A36

CROSS FRAME DETAILS I64
BRIDGE OVER NORTHWESTERN PKWY & 22ND ST.
DEPT. OF HIGHWAYS, COMMONWEALTH OF KENTUCKY
JEFFERSON CTY. FAP I64-2(34), SP56-273-11L
CONTRACTOR: MATTINGLY BRIDGE CO.

NASHVILLE BRIDGE COMPANY
NASHVILLE, TENN.
BESSEMER PLANT

APPROVED FOR SHOP
WWF 7/11/70 CHIEF DRAFTSMAN
CHIEF ENGINEER
REVISION NOTES

RIVETS NONE | HOLES 13/16 OR NOTED | FIELD CONN. 7/8 HSB | SHOP PAINT / FIELD SEE GN1

DRAWN BY FK DATE 10-28-69
IN CHARGE GATT (T.E.S.)
CHECKED BY VM DATE 11/24/69
DATE PRINTED

BILL MATERIAL NO. 29A & 29B | CONT. C6736 | S.O. B-5727 | DRAWING NO. 29

BRIDGE

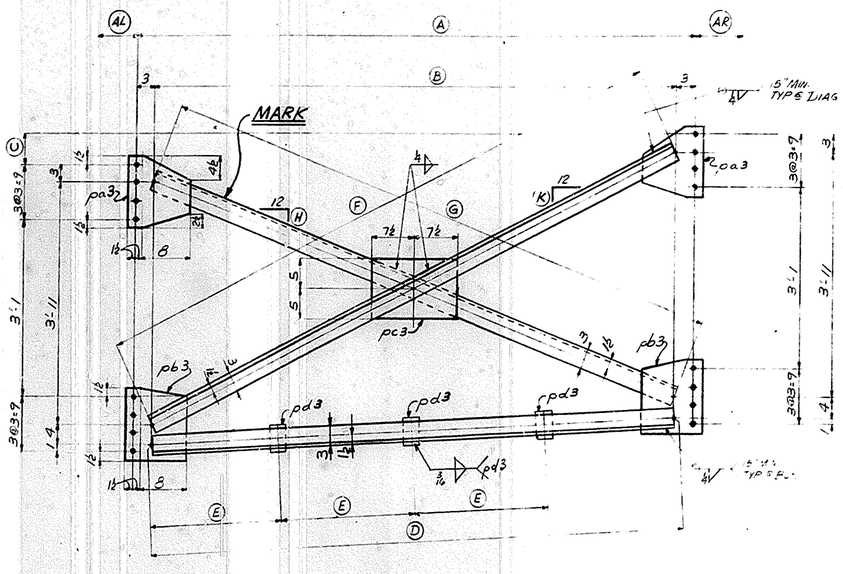

CROSS FRAMES MK 30CF25 to 30CF32 (INCL.)
(SEE TABLE BELOW FOR DIM.)

MARK	REQ'D	A	B	C	D	E	F	G	H	K	AL	AR
30CF25	ONE	9'-5 9/16"	8'-11 9/16"	3 5/16"	8'-11 9/16" (aa)	2'-2 3/4"	9'-10 1/16" (ab)	9'-8 1/16" (ac)	4 7/8"	5 5/8"	2 3/4"	2 3/4"
30CF26		9'-11 1/16"	9'-5 1/16"	3 7/8"	9'-5 1/16" (ad)	2'-4 1/4"	10'-4 1/2" (af)	10'-1 9/16" (ag)	4 9/16"	5 3/8"		
30CF27		9'-10 5/8"	9'-4 1/2"	3 7/8"	9'-4 1/2" (ah)	2'-4	10'-3 1/16" (ak)	10'-0 5/8" (am)	4 5/8"	5 7/16"		
30CF28		9'-8 5/8"	9'-2 5/8"	3 9/16"	9'-2 5/8" (an)	2'-3 1/2"	10'-1 9/16" (ap)	9'-10 3/4" (as)	4 11/16"	5 1/2"		
30CF29		9'-6 1/2"	9'-0 1/2"	3 1/16"	9'-0 1/2" (at)	2'-3	9'-11 7/16" (av)	9'-9 (aw)	4 7/8"	5 9/16"		
30CF30		10'-0 1/2"	9'-6 1/2"	3 15/16"	9'-6 1/2" (ax)	2'-4 1/2"	10'-5 1/4" (ay)	10'-2 1/4" (aab)	4 1/2"	5 5/16"		
30CF31		9'-11 11/16"	9'-5 11/16"	3 7/8"	9'-5 11/16" (ad)	2'-4 1/4"	10'-4 1/2" (af)	10'-1 9/16" (ag)	4 9/16"	5 3/8"		
30CF32	ONE	9'-10 1/8"	9'-4 1/2"	3 5/8"	9'-4 1/2" (ah)	2'-4	10'-3 (aac)	10'-0 3/16" (aad)	4 5/8"	5 7/16"	2 3/4"	2 3/4"

NASHVILLE BRIDGE COMPANY

SHOP ORDER NO. B5727 | WORK ORDER NO. | CONTRACT NO. C6736

COMMONWEALTH OF KENTUCKY, DEPT. OF HIGHWAYS, BRIDGE
OVER NORTHWESTERN PKWY & 22ND ST., JEFFERSON COUNTY

BILL NO. 30A | DRAWING NO. 30

FABRICATION BESSEMER PLANT

ITEM | WEIGHTS BY | CHECKED BY

SHOP	SHIPPING MARK	ITEM COUNT	ASSEMBLY MARK	SYMB	SECTION	FINISHED LENGTH FT. IN.	ORDERED LENGTH FT. IN.	PL NO.	SPEC NO.	REMARKS	PIECE WEIGHT	ASSY WEIGHT
					MAT'L ASTM A36							
ONE	30CF25				CROSS FRAME							
		2	aa	L	3x2½x5/16	8 11/16		3905	132			
		1	ab	L	3½x3x3/8	9 10 1/16		3943	130			
		1	ac	L	3½x3x3/8	9 5/16			130			
		2	pa3	PL	11x3/8	1 0	90 cuts @ 11	3909	409			
		2	pb3	PL	11x3/8	1 0			409			
		1	pc3	PL	10x3/8	1 3	82x38-3 cuts 240		412			
		3	pd3	BR	1½x3/8	0 3¾		STK 686	606			
ONE	30CF26				CROSS FRAME							
		2	ad	L	3x2½x5/16	9 5 11/16		3905	132			
		1	af	L	3½x3x3/8	10 4½		3943	130			
		1	ag	L	3½x3x3/8	10 1 9/16			130			
		2	pa3	PL	11x3/8	1 0	90 cuts @ 11	3909	409			
		2	pb3	PL	11x3/8	1 0			409			
		1	pc3	PL	10x3/8	1 3	82x38-3 cuts 240		412			
		3	pd3	BR	1½x3/8	0 3¾		STK 686	606			
ONE	30CF27				CROSS FRAME							
		2	ah	L	3x2½x5/16	9 4½		3905	132			
		1	ak	L	3½x3x3/8	10 3 1/16		3943	130			
		1	am	L	3½x3x3/8	10 0⅝			130			
		2	pa3	PL	11x3/8	1 0	90 cuts @ 11	3909	409			
		2	pb3	PL	11x3/8	1 0			409			
		1	pc3	PL	10x3/8	1 3	82x38-3 cuts 240		412			
		3	pd3	BR	1½x3/8	0 3¾		STK 686	606			
ONE	30CF28				CROSS FRAME							
		2	an	L	3x2½x5/16	9 2⅝		3905	132			
		1	ap	L	3½x3x3/8	10 1 1/16		3943	130			
		1	as	L	3½x3x3/8	9 10¾			130			
		2	pa3	PL	11x3/8	1 0	90 cuts @ 11	3909	409			
		2	pb3	PL	11x3/8	1 0			409			
		1	pc3	PL	10x3/8	1 3	82x38-3 cuts 240		412			
		3	pd3	BR	1½x3/8	0 3¾		STK 686	606			

SHEET TOTAL

NASHVILLE BRIDGE COMPANY

SHOP ORDER NO. B-5727 | WORK ORDER NO. | CONTRACT NO. C6736

COMMONWEALTH OF KENTUCKY, DEPT. OF HIGHWAYS, BRIDGE
OVER NORTHWESTERN PKWY & 22ND ST., JEFFERSON COUNTY

BILL NO. 30B | DRAWING NO. 30

FABRICATION BESSEMER PLANT

ITEM | WEIGHTS BY | CHECKED BY

SHOP	SHIPPING MARK	ITEM COUNT	ASSEMBLY MARK	SYMB	SECTION	FINISHED LENGTH FT. IN.	ORDERED LENGTH FT. IN.	PL NO.	SPEC NO.	REMARKS	PIECE WEIGHT	ASSY WEIGHT
					MAT'L ASTM A36							
ONE	30CF29				CROSS FRAME							
		2	at	L	3x2½x5/16	9 0½		3905	132			
		1	av	L	3½x3x3/8	9 11½		3943	130			
		1	aw	L	3½x3x3/8	9 9			130			
		2	pa3	PL	11x3/8	1 0	90 cuts @ 11	3909	409			
		2	pb3	PL	11x3/8	1 0			409			
		1	pc3	PL	10x3/8	1 3	82x38-3 cuts 240		412			
		3	pd3	BR	1½x3/8	0 3¾		STK 686	606			
ONE	30CF30				CROSS FRAME							
		2	ax	L	3x2½x5/16	9 6½		3905	132			
		1	ay	L	3½x3x3/8	10 5¼		3943	130			
		1	aab	L	3½x3x3/8	10 2¼			130			
		2	pa3	PL	11x3/8	1 0	90 cuts @ 11	3909	409			
		2	pb3	PL	11x3/8	1 0			409			
		1	pc3	PL	10x3/8	1 3	82x38-3 cuts 240		412			
		3	pd3	BR	1½x3/8	0 3¾		STK 686	606			
ONE	30CF31				CROSS FRAME							
		2	ad	L	3x2½x5/16	9 5 11/16		3905	132			
		1	af	L	3½x3x3/8	10 4½		3943	130			
		1	ag	L	3½x3x3/8	10 1 9/16			130			
		2	pa3	PL	11x3/8	1 0	90 cuts @ 11	3909	409			
		2	pb3	PL	11x3/8	1 0			409			
		1	pc3	PL	10x3/8	1 3	82x38-3 cuts 240		412			
		3	pd3	BR	1½x3/8	0 3¾		STK 686	606			
ONE	30CF32				CROSS FRAME							
		2	ah	L	3x2½x5/16	9 4½		3905	132			
		1	aac	L	3½x3x3/8	10 3		3943	130			
		1	aad	L	3½x3x3/8	10 0 3/16			130			
		2	pa3	PL	11x3/8	1 0	90 cuts @ 11	3909	409			
		2	pb3	PL	11x3/8	1 0			409			
		1	pc3	PL	10x3/8	1 3	82x38-3 cuts 240		412			
		3	pd3	BR	1½x3/8	0 3¾		STK 686	606			

SHEET TOTAL

30

FOR GENERAL NOTES SEE DWG GN1
MAT'L ASTM A36

CROSS FRAME DETAILS IG4
BRIDGE OVER NORTHWESTERN PKWY & 22ND ST.
DEPT. OF HIGHWAYS, COMMONWEALTH OF KENTUCKY
JEFFERSON CTY. FAP IG4-2(34), SP56-273-11L
CONTRACTOR: MATTINGLY BRIDGE CO.

NASHVILLE BRIDGE COMPANY
NASHVILLE, TENN.
BESSEMER PLANT

APPROVED FOR SHOP
CHIEF DRAFTSMAN
CHIEF ENGINEER
REVISION NOTES

RIVETS: NONE
HOLES: 13/16" UNLESS OTHERWISE NOTED
FIELD CONN.: 7/8" HSB
SHOP PAINT: SEE GN1
FIELD: SEE GN1

DRAWN BY: FK DATE: 10-28-69
IN CHARGE GATT. (TENSOR)
CHECKED BY: VM DATE: 11/24/69
DATE PRINTED:

BILL OF MATERIAL NO. 30A & 30B | CONT. C6736 | S.O. B-5727 | DRAWING NO. 30

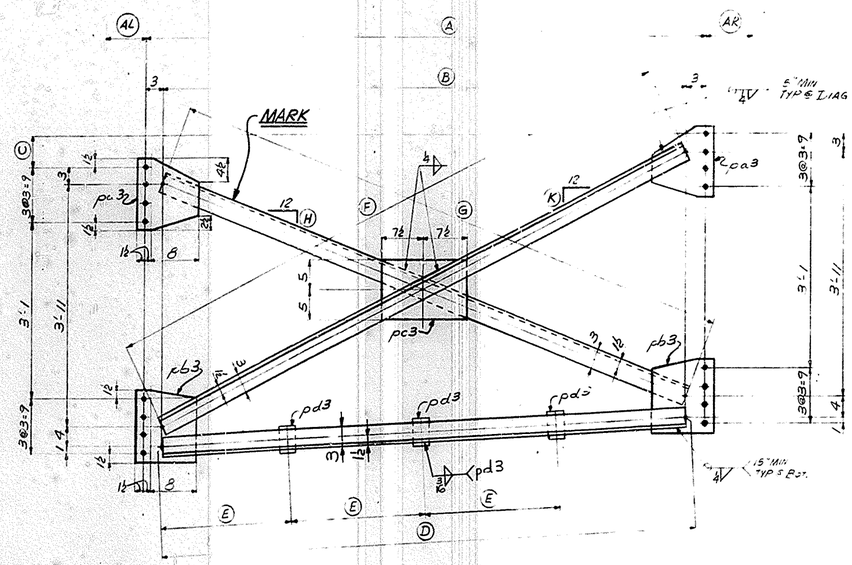

CROSS FRAMES MK 31CF33 TO 31CF40 (INCL)
(SEE TABLE BELOW FOR DIM.)

MARK	REQ'D	(A)	(B)	(C)	(D)	(E)	(F)	(G)	(H)	(K)	(AL)	(AR)
31CF33	ONE	9'-8	9'-2	3 1/8	9'-2 (aa)	2'-3 1/2	10'-0 13/16 (ab)	9'-10 3/8 (ac)	4 13/16	5 1/2	2 3/4	2 3/4
31CF34		9'-7 1/4	9'-1 1/4	2 15/16	9'-1 1/4 (ad)	2'-3 1/4	10'-0 1/16 (af)	9'-9 3/4 (ag)	4 13/16	5 1/2		
31CF35		10'-1 5/16	9'-7 5/16	3 15/16	9'-7 5/16 (ah)	2'-4 3/4	10'-6 (ak)	10'-3 (am)	4 1/2	5 5/16		
31CF36		9'-11 11/16	9'-5 11/16	3 5/8	9'-5 11/16 (an)	2'-4 1/4	10'-4 7/16 (ap)	10'-1 5/8 (as)	4 9/16	5 3/8		
31CF37		9'-9 1/2	9'-3 1/2	3 1/8	9'-3 1/2 (at)	2'-3 3/4	10'-2 1/4 (av)	9'-11 13/16 (aw)	4 3/4	5 3/8		
31CF38		9'-8	9'-2	2 13/16	9'-2 (aa)	2'-3 1/2	10'-0 11/16 (ax)	9'-10 1/2 (ay)	4 13/16	5 7/16		
31CF39		10'-2 1/16	9'-8 1/16	3 3/8	9'-8 1/16 (aab)	2'-5	10'-6 11/16 (aac)	10'-3 3/4 (aad)	4 7/16	5 1/4		
31CF40	ONE	10'-1 5/16	9'-7 5/16	3 1/16	9'-7 5/16 (ah)	2'-4 3/4	10'-5 3/8 (aaf)	10'-3 1/8 (aag)	4 1/2	5 1/4	2 3/4	2 3/4

NASHVILLE BRIDGE COMPANY

SHOP ORDER NO. B-5727 | WORK ORDER NO. | CONTRACT NO. C6736 | ITEM

COMMONWEALTH OF KENTUCKY, DEPT. OF HIGHWAYS, BRIDGE
OVER NORTHWESTERN PKWY & 22ND ST., JEFFERSON COUNTY

FABRICATION BESSEMER PLANT

BILL NO. 31A | DRAWING NO. 31

WEIGHTS BY | CHECKED BY

MAT'L ASTM A36

ONE	31CF33	Cross Frame				
	2	aa	L 3x2½x5/16	9 2	3905	132
	1	ab	L 3½x3x3/8	10 0 13/16	3943	130
	1	ac	L 3½x3x3/8	9 10 3/8	1	130
	2	pa3	PL 11x3/8	1 0 90 cuts @ 11	3907	409
	2	pb3	PL 11x3/8	1 0 1	3907	409
	1	pc3	PL 10x3/8	1 3 82x38-3 cuts 240	1	412
	3	pd3	BR 1/2x3/8	0 3 3/4	STK 686	606
ONE	31CF34	Cross Frame				
	2	ad	L 3x2½x5/16	9 1 1/4	3905	132
	1	af	L 3½x3x3/8	10 0 1/16	3943	130
	1	ag	L 3½x3x3/8	9 9 3/4	1	130
	2	pa3	PL 11x3/8	1 0 90 cuts @ 11	3907	409
	2	pb3	PL 11x3/8	1 0 1	3907	409
	1	pc3	PL 10x3/8	1 3 82x38-3 cuts 240	1	412
	3	pd3	BR 1/2x3/8	0 3 3/4	STK 686	606
ONE	31CF35	Cross Frame				
	2	ah	L 3x2½x5/16	9 7 5/16	3905	132
	1	ak	L 3½x3x3/8	10 6	3943	130
	1	am	L 3½x3x3/8	10 3	1	130
	2	pa3	PL 11x3/8	1 0 90 cuts @ 11	3907	409
	2	pb3	PL 11x3/8	1 0 1	3907	409
	1	pc3	PL 10x3/8	1 3 82x38-3 cuts 240	1	412
	3	pd3	BR 1/2x3/8	0 3 3/4	STK 686	606
ONE	31CF36	Cross Frame				
	2	an	L 3x2½x5/16	9 5 11/16	3905	132
	1	ap	L 3½x3x3/8	10 4 7/16	3943	130
	1	as	L 3½x3x3/8	10 1 5/8	1	130
	2	pa3	PL 11x3/8	1 0 90 cuts @ 11	3907	409
	2	pb3	PL 11x3/8	1 0 1	3907	409
	1	pc3	PL 10x3/8	1 3 82x38-3 cuts 240	1	412
	3	pd3	BR 1/2x3/8	0 3 3/4	STK 686	606

SHEET TOTAL

NASHVILLE BRIDGE COMPANY

SHOP ORDER NO. B-5727 | WORK ORDER NO. | CONTRACT NO. C6736 | ITEM

COMMONWEALTH OF KENTUCKY, DEPT. OF HIGHWAYS, BRIDGE
OVER NORTHWESTERN PKWY & 22ND ST., JEFFERSON COUNTY

FABRICATION BESSEMER PLANT

BILL NO. 31B | DRAWING NO. 31

WEIGHTS BY | CHECKED BY

MAT'L ASTM A36

ONE	31CF37	Cross Frame				
	2	at	L 3x2½x5/16	9 3 1/2	3905	132
	1	av	L 3½x3x3/8	10 2 1/4	3943	130
	1	aw	L 3½x3x3/8	9 11 13/16	1	130
	2	pa3	PL 11x3/8	1 0 90 cuts @ 11	3907	409
	2	pb3	PL 11x3/8	1 0 1	3907	409
	1	pc3	PL 10x3/8	1 3 82x38-3 cuts 240	1	412
	3	pd3	BR 1/2x3/8	0 3 3/4	STK 686	606
ONE	31CF38	Cross Frame				
	2	aa	L 3x2½x5/16	9 2	3905	132
	1	ax	L 3½x3x3/8	10 0 11/16	3943	130
	1	ay	L 3½x3x3/8	9 10 1/2	1	130
	2	pa3	PL 11x3/8	1 0 90 cuts @ 11	3907	409
	2	pb3	PL 11x3/8	1 0 1	3907	409
	1	pc3	PL 10x3/8	1 3 82x38-3 cuts 240	1	412
	3	pd3	BR 1/2x3/8	0 3 3/4	STK 686	606
ONE	31CF39	Cross Frame				
	2	aab	L 3x2½x5/16	9 8 1/16	3905	132
	1	aac	L 3½x3x3/8	10 6 11/16	3943	130
	1	aad	L 3½x3x3/8	10 3 3/4	1	130
	2	pa3	PL 11x3/8	1 0 90 cuts @ 11	3907	409
	2	pb3	PL 11x3/8	1 0 1	3907	409
	1	pc3	PL 10x3/8	1 3 82x38-3 cuts 240	1	412
	3	pd3	BR 1/2x3/8	0 3 3/4	STK 686	606
ONE	31CF40	Cross Frame				
	2	ah	L 3x2½x5/16	9 7 5/16	3905	132
	1	aat	L 3½x3x3/8	10 5 3/8	3943	130
	1	aag	L 3½x3x3/8	10 3 1/8	1	130
	2	pa3	PL 11x3/8	1 0 90 cuts @ 11	3907	409
	2	pb3	PL 11x3/8	1 0 1	3907	409
	1	pc3	PL 10x3/8	1 3 82x38-3 cuts 240	1	412
	3	pd3	BR 1/2x3/8	0 3 3/4	STK 686	606

SHEET TOTAL

40

FOR GENERAL NOTES SEE DWG GN1
MAT'L ASTM A36

CROSS FRAME DETAILS I64
BRIDGE OVER NORTHWESTERN PKWY & 22ND ST.
DEPT. OF HIGHWAYS, COMMONWEALTH OF KENTUCKY
JEFFERSON CTY. FAP I64-2(34)1, SP56-273-11L
CONTRACTOR: MATTINGLY BRIDGE CO.

NASHVILLE BRIDGE COMPANY
NASHVILLE, TENN
[redacted] BESSEMER PLANT

APPROVED FOR SHOP
NMF 7/11/76 CHIEF DRAFTSMAN
JAK 7/18/76 CHIEF ENGINEER
REVISION NOTES

RIVETS NONE | HOLES 13/16" OR NOTED | FIELD CONN. 7/8" HSB | SHOP PAINT SEE GN1 | FIELD SEE GN1

DRAWN BY RK DATE 10-28-69
IN CHARGE 34777 (TENSOR)
CHECKED BY WM DATE 11/24/69
DATE PRINTED [redacted]

BILLS MATERIAL NO. 31A & 31B | CONT. C6736 | S.O. B-5727 | DRAWING NO. 31

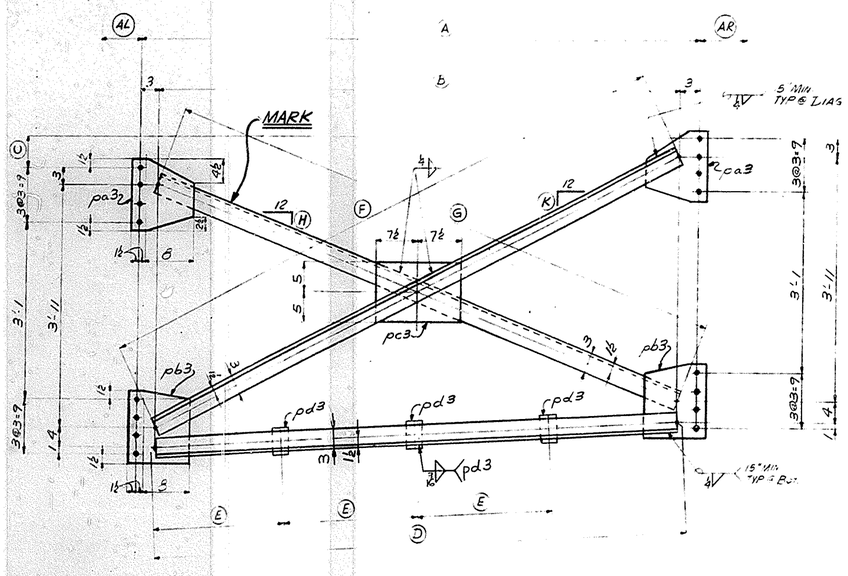

CROSS FRAMES MK 32CF41 TO 32CF48 (INCL)
(SEE TABLE BELOW FOR DIM.)

MARK	REQ'D	(A)	(B)	(C)	(D)	(E)	(F)	(G)	(H)	(K)	(AL)	(AR)
32CF41	ONE	9'-11 1/16	9'-5 1/16	3 3/16	9'-5 1/16 (aa)	2'-4 1/4	10'-3 11/16 (ab)	10'-1/4 (ac)	4 5/8	5 5/16	2 3/4	2 3/4
32CF42		9'-9 9/16	9'-3 9/16	2 7/8	9'-3 9/16 (ad)	2'-3 3/4	10'-2 5/8 (af)	9'-11 15/16 (ag)	4 3/4	5 3/8		
32CF43		9'-8 3/4	9'-2 3/4	2 11/16	9'-2 3/4 (ah)	2'-3 1/2	10'-1 3/8 (ak)	9'-11 1/4 (am)	4 13/16	5 3/8		
32CF44		9'-9 7/16	9'-3 7/16	3 9/16	9'-3 7/16 (an)	2'-3 3/4	10'-2 5/16 (ap)	9'-11 1/2 (as)	4 11/16	5 7/16		
32CF45		9'-9 5/8	9'-3 5/8	3 5/8	9'-3 5/8 (at)	2'-3 3/4	10'-1 7/8 (av)	9'-11 7/16 (aw)	4 3/4	5 7/16		
32CF46		9'-8 7/8	9'-2 7/8	2 13/16	9'-2 7/8 (ax)	2'-3 1/2	10'-1 9/16 (ay)	9'-11 5/16 (aab)	4 3/4	5 3/8		
32CF47		9'-8 11/16	9'-2 11/16	2 1/2	9'-2 11/16 (aac)	2'-3 1/2	10'-1 1/4 (aad)	9'-11 1/4 (am)	4 13/16	5 3/8		2 3/4
32CF48	ONE	9'-6 5/16	9'-0 5/16	3 9/16	9'-0 5/16 (aaf)	2'-3	9'-11 1/2 (aag)	9'-8 5/8 (aah)	4 13/16	5 5/8	2 3/4	3

NASHVILLE BRIDGE COMPANY

SHOP ORDER NO. B5727 | WORK ORDER NO. | CONTRACT NO. C6736 | ITEM

COMMONWEALTH OF KENTUCKY, DEPT. OF HIGHWAYS, BRIDGE OVER NORTHWESTERN PKWY & 22ND ST., JEFFERSON COUNTY

FABRICATION BESSEMER PLANT

BILL NO. 32A | DRAWING NO. 32

WEIGHTS BY | CHECKED BY

MAT'L ASTM A36

SHIP	SHIPPING MARK	ITEM QUANT	ASSEMBLY MARK	SECTION	FINISHED LENGTH	ORDERED LENGTH		
ONE	32CF41			Cross Frame				
		2	aa	L 3x2½x5/16	9 5/16		3905	132
		1	ab	L 3½x3x3/8	10 3/16		3943	130
		1	ac	L 3½x3x3/8	10 1/4			130
		2	pa3	PL 11x3/8	1 0	90 cuts 8@11	3909	409
		2	pb3	PL 11x3/8	1 0			409
		1	pc3	PL 10x3/8	1 3	82x38-3 cuts 240		412
		3	pd3	BR 12x3/8	0 3 3/4		STK 686	606
ONE	32CF42			Cross Frame				
		2	ad	L 3x2½x5/16	9 3/16		3905	132
		1	af	L 3½x3x3/8	10 2 1/8		3943	130
		1	ag	L 3½x3x3/8	9 11 15/16			130
		2	pa3	PL 11x3/8	1 0	90 cuts 8@11	3909	409
		2	pb3	PL 11x3/8	1 0			409
		1	pc3	PL 10x3/8	1 3	82x38-3 cuts 240		412
		3	pd3	BR 12x3/8	0 3 3/4		STK 686	606
ONE	32CF43			Cross Frame				
		2	ah	L 3x2½x5/16	9 2 3/4		3905	132
		1	ak	L 3½x3x3/8	10 1 3/8		3943	130
		1	am	L 3½x3x3/8	9 11 1/4			130
		2	pa3	PL 11x3/8	1 0	90 cuts 8@11	3909	409
		2	pb3	PL 11x3/8	1 0			409
		1	pc3	PL 10x3/8	1 3	82x38-3 cuts 240		412
		3	pd3	BR 12x3/8	0 3 3/4		STK 686	606
ONE	32CF44			Cross Frame				
		2	an	L 3x2½x5/16	9 3 7/16		3905	132
		1	ap	L 3½x3x3/8	10 2 5/16		3943	130
		1	as	L 3½x3x3/8	9 11 1/2			130
		2	pa3	PL 11x3/8	1 0	90 cuts 8@11	3909	409
		2	pb3	PL 11x3/8	1 0			409
		1	pc3	PL 10x3/8	1 3	82x38-3 cuts 240		412
		3	pd3	BR 12x3/8	0 3 3/4		STK 686	606

SHEET TOTAL

NASHVILLE BRIDGE COMPANY

SHOP ORDER NO. B-5727 | WORK ORDER NO. | CONTRACT NO. C6736 | ITEM

COMMONWEALTH OF KENTUCKY, DEPT. OF HIGHWAYS, BRIDGE OVER NORTHWESTERN PKWY & 22ND ST., JEFFERSON COUNTY

FABRICATION BESSEMER PLANT

BILL NO. 32B | DRAWING NO. 32

WEIGHTS BY | CHECKED BY

MAT'L ASTM A36

SHIP	SHIPPING MARK	ITEM QUANT	ASSEMBLY MARK	SECTION	FINISHED LENGTH	ORDERED LENGTH		
ONE	32CF45			Cross Frame				
		2	at	L 3x2½x5/16	9 3 5/8		3905	132
		1	av	L 3½x3x3/8	10 1 3/8		3943	130
		1	aw	L 3½x3x3/8	9 11 7/16			130
		2	pa3	PL 11x3/8	1 0	90 cuts 8@11	3909	409
		2	pb3	PL 11x3/8	1 0			409
		1	pc3	PL 10x3/8	1 3	82x38-3 cuts 240		412
		3	pd3	BR 12x3/8	0 3 3/4		STK 686	606
ONE	32CF46			Cross Frame				
		2	ax	L 3x2½x5/16	9 2 7/8		3905	132
		1	ay	L 3½x3x3/8	10 1 9/16		3943	130
		1	aab	L 3½x3x3/8	9 11 5/16			130
		2	pa3	PL 11x3/8	1 0	90 cuts 8@11	3909	409
		2	pb3	PL 11x3/8	1 0			409
		1	pc3	PL 10x3/8	1 3	82x38-3 cuts 240		412
		3	pd3	BR 12x3/8	0 3 3/4		STK 686	606
ONE	32CF47			Cross Frame				
		2	aac	L 3x2½x5/16	9 2 11/16		3905	132
		1	aad	L 3½x3x3/8	10 1 1/4		3943	130
		1	am	L 3½x3x3/8	9 11 1/4			130
		2	pa3	PL 11x3/8	1 0	90 cuts 8@11	3909	409
		2	pb3	PL 11x3/8	1 0			409
		1	pc3	PL 10x3/8	1 3	82x38-3 cuts 240		412
		3	pd3	BR 12x3/8	0 3 3/4		STK 686	606
ONE	32CF48			Cross Frame				
		2	aaf	L 3x2½x5/16	9 0 5/8		3905	132
		1	aag	L 3½x3x3/8	9 11 1/2		3943	130
		1	aah	L 3½x3x3/8	9 8 5/8			130
		2	pa3	PL 11x3/8	1 0	90 cuts 8@11	3909	409
		2	pb3	PL 11x3/8	1 0			409
		1	pc3	PL 10x3/8	1 3	82x38-3 cuts 240		412
		3	pd3	BR 12x3/8	0 3 3/4		STK 686	606

SHEET TOTAL

H

FOR GENERAL NOTES SEE DWG GN1
MAT'L ASTM A36

CROSS FRAME DETAILS I64
BRIDGE OVER NORTHWESTERN PKWY & 22ND ST.
DEPT. OF HIGHWAYS, COMMONWEALTH OF KENTUCKY
JEFFERSON CTY. FAP I64-2(34), SP56-273-111
CONTRACTOR: MATTINGLY BRIDGE CO.

NASHVILLE BRIDGE COMPANY
NASHVILLE, TENN.
BESSEMER PLANT

APPROVED FOR SHOP: WMF 7/7/70 Chief Draftsman; JRK 7/8/70 Chief Engineer
REVISION NOTED

RIVETS: NONE | HOLES: 13/16 OR NOTED | FIELD CONN: 13/16 HSB | SHOP PAINT: GRS | FIELD: GN1
DRAWN BY: FK DATE: 10-28-69 | IN CHARGE: GATT (TENBAR) | CHECKED BY: JM DATE: 11/24/69 | DATE PRINTED:

BILLS MATERIAL NO.: 32A & 32B | CONT. C6736 | S.O. B-5727 | DRAWING NO. 32

P. K. ELLIOTT CO., PITT., PA. REORDER 6-7007

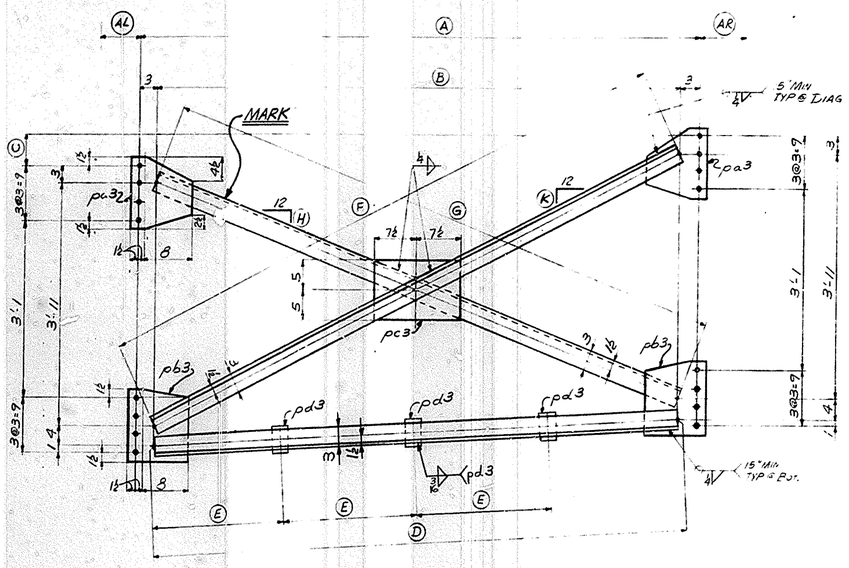

CROSS FRAMES MK 33CF49 to 33CF56 (INCL)
(SEE TABLE BELOW FOR DIM.)

MARK	REQD	(A)	(B)	(C)	(D)	(E)	(F)	(G)	(H)	(K)	(AL)	(AR)
33CF49	ONE	9'-6 9/16	9'-0 9/16	3 3/8	9'-0 9/16 (aa)	2'-3	9'-11 5/8 (ab)	9'-8 15/16 (ac)	4 13/16	5 9/16	2 3/4	2 3/4
33CF50	ONE	9'-6 5/16	9'-0 5/16	3 7/16	9'-0 5/16 (ad)	2'-3	9'-11 7/16 (af)	9'-8 11/16 (ag)	4 13/16	5 9/16	2 3/4	3
33CF51	ONE	9'-6 5/16	9'-0 5/16	3 1/4	9'-0 5/16 (ad)	2'-3	9'-11 3/8 (ah)	9'-8 3/4 (ak)	4 7/8	5 9/16	2 3/4	3
33CF52	3	9'-6 9/16	9'-0 9/16	3 1/8	9'-0 9/16 (aa)	2'-3	9'-11 1/2 (am)	9'-9 1/16 (an)	4 7/8	5 9/16	2 3/4	2 3/4
33CF53	ONE	9'-6 5/16	9'-0 5/16	3 1/8	9'-0 5/16 (ad)	2'-3	9'-11 5/16 (ap)	9'-8 13/16 (as)	4 7/8	5 9/16	2 3/4	3
33CF54	4	9'-6 9/16	9'-0 9/16	2 3/4	9'-0 9/16 (aa)	2'-3	9'-11 3/8 (ah)	9'-9 3/16 (at)	4 7/8	5 1/2	2 3/4	2 3/4
33CF55	6	9'-6 9/16	9'-0 9/16	2 7/16	9'-0 9/16 (aa)	2'-3	9'-11 1/4 (av)	9'-9 5/16 (aw)	4 15/16	5 7/16	2 3/4	2 3/4
33CF56	2	8'-11 1/2	8'-5 1/2	2 1/16	8'-5 1/2 (ax)	2'-1 1/4	9'-4 3/4 (ay)	9'-3 (aab)	5 5/16	5 13/16	6 1/4	6 1/4

NASHVILLE BRIDGE COMPANY

SHOP ORDER NO. B5727 | WORK ORDER NO. | CONTRACT NO. C6736 | ITEM

COMMONWEALTH OF KENTUCKY, DEPT. OF HIGHWAYS, BRIDGE
OVER NORTHWESTERN PKWY & 22ND ST., JEFFERSON COUNTY

BILL NO. 33A | DRAWING NO. 33

FABRICATION BESSEMER PLANT

WEIGHTS BY | CHECKED BY

SHOP	SHIPPING MARK	ITEM QUANT	ASSEMBLY MARK	MATL	SECTION	FINISHED LENGTH	ORDERED LENGTH	PO NO	ITEM NO	REMARKS	AISC WEIGHT
					MAT'L ASTM A36						
ONE	33CF49				CROSS FRAME						
		2	aa	L	3x2½x5/16	9 0 9/16		3905	132		
		1	ab	L	3½x3x3/8	9 11 5/8		3943	130		
		1	ac	L	3½x3x3/8	9 8 15/16		↓	130		
		2	pa3	PL	11x3/8	1 0	90 CUTS 8@11	3909	409		
		2	pb3	PL	11x3/8	1 0	↓		409		
		1	pc3	PL	10x3/8	1 3	82x38'-3 CUTS 240		412		
		3	pd3	BR	1½x3/8	0 3 3/4		STK 686	606		
ONE	33CF50				CROSS FRAME						
		2	ad	L	3x2½x5/16	9 0 5/16		3905	132		
		1	af	L	3½x3x3/8	9 11 7/16		3943	130		
		1	ag	L	3½x3x3/8	9 8 11/16		↓	130		
		2	pa3	PL	11x3/8	1 0	90 CUTS 8@11	3909	409		
		2	pb3	PL	11x3/8	1 0	↓		409		
		1	pc3	PL	10x3/8	1 3	82x38'-3 CUTS 240		412		
		3	pd3	BR	1½x3/8	0 3 3/4		STK 686	606		
ONE	33CF51				CROSS FRAME						
		2	ad	L	3x2½x5/16	9 0 5/16		3905	132		
		1	ah	L	3½x3x3/8	9 11 3/8		3943	130		
		1	ak	L	3½x3x3/8	9 8 3/4		↓	130		
		2	pa3	PL	11x3/8	1 0	90 CUTS 8@11	3909	409		
		2	pb3	PL	11x3/8	1 0	↓		409		
		1	pc3	PL	10x3/8	1 3	82x38'-3 CUTS 240		412		
		3	pd3	BR	1½x3/8	0 3 3/4		STK 686	606		
3	33CF52				CROSS FRAME						
		6	aa	L	3x2½x5/16	9 0 9/16		3905	132		
		3	am	L	3½x3x3/8	9 11 1/2		3943	130		
		3	an	L	3½x3x3/8	9 9 1/16		↓	130		
		6	pa3	PL	11x3/8	1 0	90 CUTS 8@11	3909	409		
		6	pb3	PL	11x3/8	1 0	↓		409		
		3	pc3	PL	10x3/8	1 3	82x38'-3 CUTS 240		412		
		9	pd3	BR	1½x3/8	0 3 3/4		STK 686	606		
3										SHEET TOTAL	

NASHVILLE BRIDGE COMPANY

SHOP ORDER NO. B-5727 | WORK ORDER NO. | CONTRACT NO. C6736 | ITEM

COMMONWEALTH OF KENTUCKY, DEPT. OF HIGHWAYS, BRIDGE
OVER NORTHWESTERN PKWY & 22ND ST., JEFFERSON COUNTY

BILL NO. 33B | DRAWING NO. 33

FABRICATION BESSEMER PLANT

WEIGHTS BY | CHECKED BY

SHOP	SHIPPING MARK	ITEM QUANT	ASSEMBLY MARK	MATL	SECTION	FINISHED LENGTH	ORDERED LENGTH	PO NO	ITEM NO	REMARKS	SPECIAL WEIGHT	AISC WEIGHT
					MAT'L ASTM A36							
ONE	33CF53				CROSS FRAME							
		2	ad	L	3x2½x5/16	9 0 5/16		3905	132			
		1	ap	L	3½x3x3/8	9 11 7/16		3943	130			
		1	as	L	3½x3x3/8	9 8 13/16		↓	130			
		2	pa3	PL	11x3/8	1 0	90 CUTS 8@11	3909	409			
		2	pb3	PL	11x3/8	1 0	↓		409			
		1	pc3	PL	10x3/8	1 3	82x38'-3 CUTS 240		412			
		3	pd3	BR	1½x3/8	0 3 3/4		STK 686	606			
4	33CF54				CROSS FRAME							
		8	aa	L	3x2½x5/16	9 0 9/16		3905	132			
		4	ah	L	3½x3x3/8	9 11 3/8		3943	130			
		4	at	L	3½x3x3/8	9 9 3/16		↓	130			
		8	pa3	PL	11x3/8	1 0	90 CUTS 8@11	3909	409			
		8	pb3	PL	11x3/8	1 0	↓		409			
		4	pc3	PL	10x3/8	1 3	82x38'-3 CUTS 240		412			
		12	pd3	BR	1½x3/8	0 3 3/4		STK 686	606			
6	33CF55				CROSS FRAME							
		12	aa	L	3x2½x5/16	9 0 9/16		3905	132			
		6	av	L	3½x3x3/8	9 11 1/4		3943	130			
		6	aw	L	3½x3x3/8	9 9 5/16		↓	130			
		12	pa3	PL	11x3/8	1 0	90 CUTS 8@11	3909	409			
		12	pb3	PL	11x3/8	1 0	↓		409			
		6	pc3	PL	10x3/8	1 3	82x38'-3 CUTS 240		412			
		18	pd3	BR	1½x3/8	0 3 3/4		STK 686	606			
2	33CF56				CROSS FRAME							
		4	ax	L	3x2½x5/16	8 5 1/2		3905	132			
		2	ay	L	3½x3x3/8	9 4 3/4		3943	130			
		2	aab	L	3½x3x3/8	9 3		↓	130			
		4	pa3	PL	11x3/8	1 0	90 CUTS 8@11	3909	409			
		4	pb3	PL	11x3/8	1 0	↓		409			
		2	pc3	PL	10x3/8	1 3	82x38'-3 CUTS 240		412			
		6	pd3	BR	1½x3/8	0 3 3/4		STK 686	606			
4										SHEET TOTAL		

42

FOR GENERAL NOTES SEE DWG GN1
MAT'L ASTM A36

APPROVED FOR SHOP: HME 7/15/68 CHIEF DRAFTSMAN; HLK 7/18/68 CHIEF ENGINEER
REVISION NOTES

CROSS FRAME DETAILS I64
BRIDGE OVER NORTHWESTERN PKWY & 22ND ST.
DEPT. OF HIGHWAYS, COMMONWEALTH OF KENTUCKY
JEFFERSON CTY. FAP I64-2(34), SPSC-273-11L
CONTRACTOR: MATTINGLY BRIDGE CO.

NASHVILLE BRIDGE COMPANY
NASHVILLE, TENN
BESSEMER PLANT

RIVETS 15/16 NO. VE — | HOLES 15/16 OR NOTED 13/8 HSB | FIELD CONN. | SHOP PAINT | FIELD — SEE GN1
DRAWN BY FK DATE 10-28-69 IN CHARGE GATTI (TENSOR)
CHECKED BY JMM DATE 1/24/69
DATE PRINTED

BILL MATERIAL NO. 33A & 33B | CONT. C6736 | S.O. B-5727 | DRAWING NO. 33

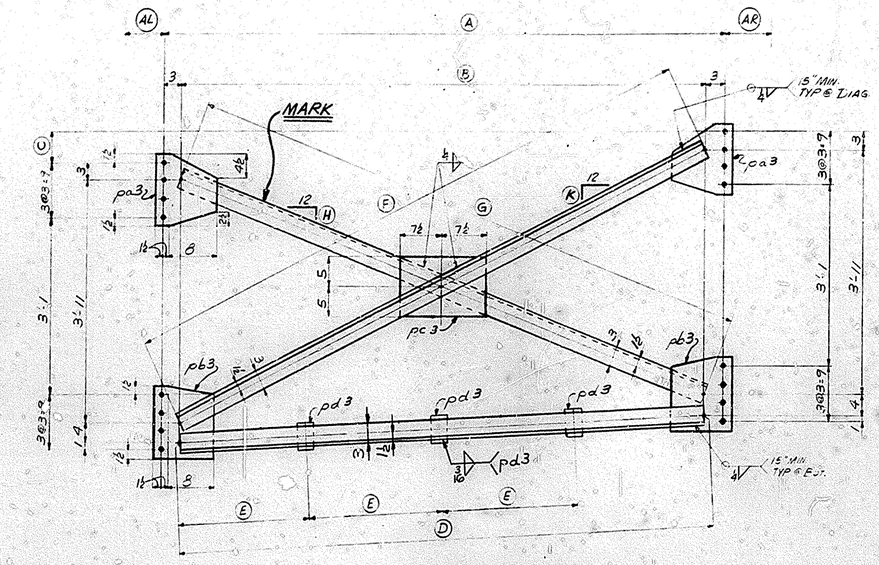

CROSS FRAMES MK 34CF57 TO 34CF64 (INCL)
(SEE TABLE BELOW FOR DIM.)

MARK	REQ'D	(A)	(B)	(C)	(D)	(E)	(F)	(G)	(H)	(K)	(AL)	(AR)
34CF57	ONE	9'-1½	8'-7½	2 1/16	8'-7½ (aa)	2'-1¾	9'-6 9/16 (ab)	9'-4 13/16 (ac)	5 3/16	5 11/16	6¼	4¼
34CF58	ONE	9'-3½	8'-9½	2 1/16	8'-9½ (ad)	2'-2¼	9'-8 5/16 (af)	9'-6 11/16 (ag)	5⅛	5 9/16	4¼	4¼
34CF59	4	9'-6½	9'-0½	1¾	9'-0½ (ah)	2'-3	9'-10 15/16 (ak)	9'-9 9/16 (am)	5	5⅜	2¾	2¾
34CF60	4	9'-6½	9'-0½	1⅜	9'-0½ (ah)	2'-3	9'-10 13/16 (an)	9'-9 11/16 (ap)	5 1/16	5⅜	2¾	2¾
34CF61	9	9'-6½	9'-0½	1 1/16	9'-0½ (ah)	2'-3	9'-10 11/16 (as)	9'-9 13/16 (at)	5 1/16	5 5/16	2¾	2¾
34CF62	2	8'-11½	8'-5½	¾	8'-5½ (av)	2'-1¼	9'-4 3/16 (aw)	9'-3 9/16 (ax)	5 7/16	5⅝	6¼	6¼
34CF63	ONE	9'-1½	8'-7½	¾	8'-7½ (aa)	2'-1¾	9'-6 (ay)	9'-5⅜ (aab)	5⅜	5 9/16	6¼	4¼
34CF64	ONE	9'-3½	8'-9½	¾	8'-9½ (ad)	2'-2¼	9'-7 7/16 (aac)	9'-7 7/16 (aad)	5¼	5 7/16	4¼	4¼

NASHVILLE BRIDGE COMPANY

SHOP ORDER NO B5727 | WORK ORDER NO | CONTRACT NO C6736 | ITEM

COMMONWEALTH OF KENTUCKY, DEPT. OF HIGHWAYS, BRIDGE
OVER NORTHWESTERN PKWY & 22ND ST., JEFFERSON COUNTY

FABRICATION BESSEMER PLANT

BILL NO 34A | DRAWING NO 34

MAT'L ASTM A36

ONE 34CF57			Cross Frame			
2	aa	L 3x2½x5/16	8 7½		3905	132
1	ab	L 3½x3x3/8	9 6 9/16		3943	130
1	ac	L 3½x3x3/8	9 4 13/16		⊥	130
2	pa3	PL 11x3/8	1 0	90 cuts @ 11	3909	409
2	pb3	PL 11x3/8	1 0	⊥	}	409
1	pc3	PL 10x3/8	1 3	82x38-3 cuts 240	⊥	412
3	pd3	BR 1½x3/8	0 3¾		STK 686	606
ONE 34CF58			Cross Frame			
2	ad	L 3x2½x5/16	8 9½		3905	132
1	af	L 3½x3x3/8	9 8 5/16		3943	130
1	ag	L 3½x3x3/8	9 6 11/16		⊥	130
2	pa3	PL 11x3/8	1 0	90 cuts @ 11	3909	409
2	pb3	PL 11x3/8	1 0	⊥	}	409
1	pc3	PL 10x3/8	1 3	82x38-3 cuts 240	⊥	412
3	pd3	BR 1½x3/8	0 3¾		STK 686	606
4 34CF59			Cross Frame			
8	ah	L 3x2½x5/16	9 0½		3905	132
4	ak	L 3½x3x3/8	9 10 15/16		3943	130
4	am	L 3½x3x3/8	9 9 9/16		⊥	130
8	pa3	PL 11x3/8	1 0	90 cuts @ 11	3909	409
8	pb3	PL 11x3/8	1 0	⊥	}	409
4	pc3	PL 10x3/8	1 3	82x38-3 cuts 240	⊥	412
12	pd3	BR 1½x3/8	0 3¾		STK 686	606
4 34CF60			Cross Frame			
8	ah	L 3x2½x5/16	9 0½		3905	132
4	an	L 3½x3x3/8	9 10 13/16		3943	130
4	ap	L 3½x3x3/8	9 9 11/16		⊥	130
8	pa3	PL 11x3/8	1 0	90 cuts @ 11	3909	409
8	pb3	PL 11x3/8	1 0	⊥	}	409
4	pc3	PL 10x3/8	1 3	82x38-3 cuts 240	⊥	412
12	pd3	BR 1½x3/8	0 3¾		STK 686	606

SHEET TOTAL

NASHVILLE BRIDGE COMPANY

SHOP ORDER NO B-5727 | WORK ORDER NO | CONTRACT NO C6736 | ITEM

COMMONWEALTH OF KENTUCKY, DEPT. OF HIGHWAYS, BRIDGE
OVER NORTHWESTERN PKWY & 22ND ST., JEFFERSON COUNTY

FABRICATION BESSEMER PLANT

BILL NO 34B | DRAWING NO 34

MAT'L ASTM A36

9 34CF61			Cross Frame			
18	ah	L 3x2½x5/16	9 0½		3905	132
9	as	L 3½x3x3/8	9 10 15/16		3943	130
9	at	L 3½x3x3/8	9 9 13/16		⊥	130
18	pa3	PL 11x3/8	1 0	90 cuts @ 11	3909	409
18	pb3	PL 11x3/8	1 0	⊥	}	409
9	pc3	PL 10x3/8	1 3	82x38-3 cuts 240	⊥	412
27	pd3	BR 1½x3/8	0 3¾		STK 686	606
2 34CF62			Cross Frame			
4	av	L 3x2½x5/16	8 5½		3905	132
2	aw	L 3½x3x3/8	9 4 3/16		3943	130
2	ax	L 3½x3x3/8	9 3 1/16		⊥	130
4	pa3	PL 11x3/8	1 0	90 cuts @ 11	3909	409
4	pb3	PL 11x3/8	1 0	⊥	}	409
2	pc3	PL 10x3/8	1 3	82x38-3 cuts 240	⊥	412
6	pd3	BR 1½x3/8	0 3¾		STK 686	606
ONE 34CF63			Cross Frame			
2	aa	L 3x2½x5/16	8 7½		3905	132
1	ay	L 3½x3x3/8	9 6		3943	130
1	aab	L 3½x3x3/8	9 5⅜		⊥	130
2	pa3	PL 11x3/8	1 0	90 cuts @ 11	3909	409
2	pb3	PL 11x3/8	1 0	⊥	}	409
1	pc3	PL 10x3/8	1 3	82x38-3 cuts 240	⊥	412
3	pd3	BR 1½x3/8	0 3¾		STK 686	606
ONE 34CF64			Cross Frame			
2	ad	L 3x2½x5/16	8 9½		3905	132
1	aac	L 3½x3x3/8	9 7 13/16		3943	130
1	aad	L 3½x3x3/8	9 7 7/16		⊥	130
2	pa3	PL 11x3/8	1 0	90 cuts @ 11	3909	409
2	pb3	PL 11x3/8	1 0	⊥	}	409
1	pc3	PL 10x3/8	1 3	82x38-3 cuts 240	⊥	412
3	pd3	BR 1½x3/8	0 3¾		STK 686	606

SHEET TOTAL

43

FOR GENERAL NOTES SEE DWG GN1
MAT'L ASTM A36

CROSS FRAME DETAILS I64
BRIDGE OVER NORTHWESTERN PKWY & 22ND ST.
DEPT. OF HIGHWAYS, COMMONWEALTH OF KENTUCKY
JEFFERSON CTY. FAP I64-2(34)1, SP56-273-11L
CONTRACTOR: MATTINGLY BRIDGE CO.

NASHVILLE BRIDGE COMPANY
NASHVILLE, TENN
BESSEMER PLANT

APPROVED FOR SHOP
WJF 7/7/70 CHIEF DRAFTSMAN
JK 7/7/70 CHIEF ENGINEER
REVISION NOTES

RIVETS NONE 13/16" | HOLES OR NOTED | FIELD CONN 7/8" HSB | SHOP PAINT } SEE GN1 | FIELD
DRAWN BY FK DATE 10-28-69
IN CHARGE GATT (PENSOR)
CHECKED BY V DATE 11/24/69
DATE PRINTED

BILLS MATERIAL NO 34A & 34B | CONT. C6736 | S.O. B-5727 | DRAWING NO 34

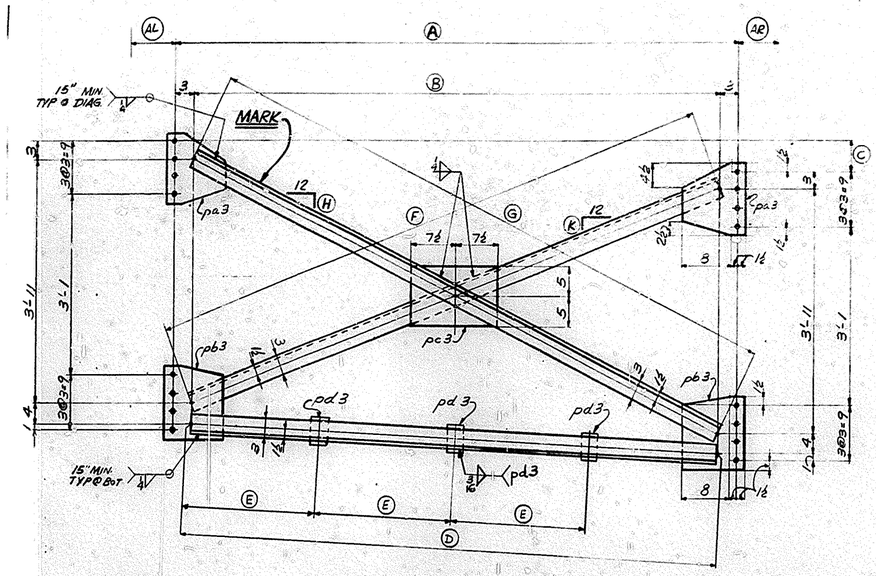

CROSS FRAMES MK 35CF66 to 35CF71, 35CF91 & 35CF92
(SEE TABLE BELOW FOR DIM.)

MARK	REQD	Ⓐ	Ⓑ	Ⓒ	Ⓓ	Ⓔ	Ⓕ	Ⓖ	Ⓗ	Ⓚ	Ⓐⓛ	Ⓐⓡ
35CF66	4	9'-6½	9'-0½	1/16	9'-0½ (aa)	2'-3	9'-10 7/16 (ab)	9'-10¼ (ac)	5 3/16	5 3/16	2¾	2¾
35CF67	ONE	9'-6¼	9'-0¼	¼	9'-0¼ (ad)	2'-3	9'-9 15/16 (af)	9'-10⅛ (ag)	5¼	5 3/16	2¾	3
35CF68	2	9'-6½	9'-0½	7/16	9'-0½ (aa)	2'-3	9'-10 1/16 (ah)	9'-10 7/16 (ak)	5¼	5⅛	2¾	2¾
35CF69	ONE	9'-6¼	9'-0¼	7/16	9'-0¼ (ad)	2'-3	9'-9 13/16 (am)	9'-10 3/16 (an)	5¼	5⅛	2¾	3
35CF70	ONE	9'-6¼	9'-0¼	⅝	9'-0¼ (ad)	2'-3	9'-9¾ (ap)	9'-10¼ (ac)	5¼	5⅛	2¾	3
35CF71	ONE	9'-6¼	9'-0¼	13/16	9'-0¼ (ad)	2'-3	9'-9 11/16 (as)	9'-10⅜ (at)	5 5/16	5⅛	2¾	3
35CF91	8	9'-6½	9'-0½	1	9'-0½ (aa)	2'-3	9'-9⅞ (av)	9'-10 5/8 (aw)	5 5/16	5 1/16	2¾	2¾
35CF92	5	9'-6½	9'-0½	3/16	9'-0½ (aa)	2'-3	9'-10 3/16 (ab)	9'-10 5/16 (ax)	5 3/16	5 3/16	2¾	2¾

NASHVILLE BRIDGE COMPANY

SHOP ORDER NO. B5727 | WORK ORDER NO. | CONTRACT NO. C6736

COMMONWEALTH OF KENTUCKY, DEPT. OF HIGHWAYS, BRIDGE
OVER NORTHWESTERN PKWY & 22ND ST., JEFFERSON COUNTY

BILL NO. 35A | DRAWING NO. 35

FABRICATION BESSEMER PLANT

ITEM | WEIGHTS BY | CHECKED BY

SHIP	SHIPPING MARK	ITEM COUNT	ASSEMBLY MARK	SECTION	FINISHED LENGTH FT. IN.	ORDERED LENGTH FT. IN.	PCS. NO.	ITEM NO.	REMARKS	SPEC. ARTICLE	AISC WEIGHT
				MAT'L ASTM A36							
		4	35CF66	CROSS FRAME							
			8 aa	L 3x2½x 7/16	9 0½			3905	132		
			4 ab	L 3½x3x⅜	9 10 7/16			3943	130		
			4 ac	L 3½x3x⅜	9 10¼				130		
			8 pa3	PL 11x⅜	1 0	90 CUTS @ 11		3909	407		
			8 pb3	PL 11x⅜	1 0				407		
			4 pc3	PL 10x⅜	1 3	82x38-3 CUTS 240			412		
			12 pd3	BR ½x⅜	0 3¾			STK 686	606		
		ONE	35CF67	CROSS FRAME							
			2 ad	L 3x2½x 7/16	9 0¼			3905	132		
			1 af	L 3½x3x⅜	9 9 13/16			3943	130		
			1 ag	L 3½x3x⅜	9 10⅛				130		
			2 pa3	PL 11x⅜	1 0	90 CUTS @ 11		3909	407		
			2 pb3	PL 11x⅜	1 0				407		
			1 pc3	PL 10x⅜	1 3	82x38-3 CUTS 240			412		
			3 pd3	BR ½x⅜	0 3¾			STK 686	606		
		2	35CF68	CROSS FRAME							
			4 aa	L 3x2½x 7/16	9 0½			3905	132		
			2 ah	L 3½x3x⅜	9 10 1/16			3943	130		
			2 ak	L 3½x3x⅜	9 10⅞				130		
			4 pa3	PL 11x⅜	1 0	90 CUTS @ 11		3909	407		
			4 pb3	PL 11x⅜	1 0				407		
			2 pc3	PL 10x⅜	1 3	82x38-3 CUTS 240			412		
			6 pd3	BR ½x⅜	0 3¾			STK 686	606		
		ONE	35CF69	CROSS FRAME							
			2 ad	L 3x2½x 7/16	9 0¼			3905	132		
			1 am	L 3½x3x⅜	9 9 13/16			3943	130		
			1 an	L 3½x3x⅜	9 10⅛				130		
			2 pa3	PL 11x⅜	1 0	90 CUTS @ 11		3909	407		
			2 pb3	PL 11x⅜	1 0				407		
			1 pc3	PL 10x⅜	1 3	82x38-3 CUTS 240			412		
			3 pd3	BR ½x⅜	0 3¾			STK 686	606		

SHEET TOTAL

NASHVILLE BRIDGE COMPANY

SHOP ORDER NO. B-5727 | WORK ORDER NO. | CONTRACT NO. C6736

COMMONWEALTH OF KENTUCKY, DEPT. OF HIGHWAYS, BRIDGE
OVER NORTHWESTERN PKWY & 22ND ST., JEFFERSON COUNTY

BILL NO. 35B | DRAWING NO. 35

FABRICATION BESSEMER PLANT

ITEM | WEIGHTS BY | CHECKED BY

SHIP	SHIPPING MARK	ITEM COUNT	ASSEMBLY MARK	SECTION	FINISHED LENGTH FT. IN.	ORDERED LENGTH FT. IN.	PCS. NO.	ITEM NO.	REMARKS	SPEC. ARTICLE	AISC WEIGHT
				MAT'L ASTM A36							
		ONE	35CF70	CROSS FRAME							
			2 ad	L 3x2½x 7/16	9 0¼			3905	132		
			1 ap	L 3½x3x⅜	9 9¾			3943	130		
			1 ac	L 3½x3x⅜	9 10¼				130		
			2 pa3	PL 11x⅜	1 0	90 CUTS @ 11		3909	407		
			2 pb3	PL 11x⅜	1 0				407		
			1 pc3	PL 10x⅜	1 3	82x38-3 CUTS 240			412		
			3 pd3	BR ½x⅜	0 3¾			STK 686	606		
		ONE	35CF71	CROSS FRAME							
			2 ad	L 3x2½x⅜	9 0¼			3905	132		
			1 as	L 3½x3x⅜	9 9 11/16			3943	130		
			1 at	L 3½x3x⅜	9 10⅜				130		
			2 pa3	PL 11x⅜	1 0	90 CUTS @ 11		3909	407		
			2 pb3	PL 11x⅜	1 0				407		
			1 pc3	PL 10x⅜	1 3	82x38-3 CUTS 240			412		
			3 pd3	BR ½x⅜	0 3¾			STK 686	606		
		8	35CF91	CROSS FRAME							
			16 aa	L 3x2½x⅜	9 0½			3905	132		
			8 av	L 3½x3x⅜	9 9⅞			3943	130		
			8 aw	L 3½x3x⅜	9 10⅝				130		
			16 pa3	PL 11x⅜	1 0	90 CUTS @ 11		3909	407		
			16 pb3	PL 11x⅜	1 0				407		
			8 pc3	PL 10x⅜	1 3	82x38-3 CUTS 240			412		
			24 pd3	BR ½x⅜	0 3¾			STK 686	606		
		5	35CF92	CROSS FRAME							
			10 aa	L 3x2½x⅜	9 0½			3905	132		
			5 ab	L 3½x3x⅜	9 10 3/16			3943	130		
			5 ax	L 3½x3x⅜	9 10 5/16				130		
			10 pa3	PL 11x⅜	1 0	90 CUTS @ 11		3909	407		
			10 pb3	PL 11x⅜	1 0				407		
			5 pc3	PL 10x⅜	1 3	82x38-3 CUTS 240			412		
			15 pd3	BR ½x⅜	0 3¾			STK 686	606		

SHEET TOTAL

44

FOR GENERAL NOTES, SEE DWG GN1
MAT'L ASTM A36

CROSS FRAME DETAILS IG4
BRIDGE OVER NORTHWESTERN PKWY & 22ND ST.
DEPT. OF HIGHWAYS, COMMONWEALTH OF KENTUCKY
JEFFERSON CTY. FAP 264-2(34), S256-273-111
CONTRACTOR: MATTINGLY BRIDGE CO.

NASHVILLE BRIDGE COMPANY
NASHVILLE, TENN.
BESSEMER PLANT

APPROVED FOR SHOP
CHIEF DRAFTSMAN
CHIEF ENGINEER
REVISION NOTES

RIVETS: NONE 7/16
HOLES: 13/16" NOTED
FIELD CONN.: 7/8" HSB
SHOP PAINT: SEE GN1
FIELD:
DRAWN BY: EK DATE: 10-29-69
IN CHARGE: [illegible]
CHECKED BY: YM DATE: 11-24-69
DATE PRINTED:

BILL MATERIAL NO. 35A & 35B
CONT. C6736
S.O. B-5727
DRAWING NO. 35

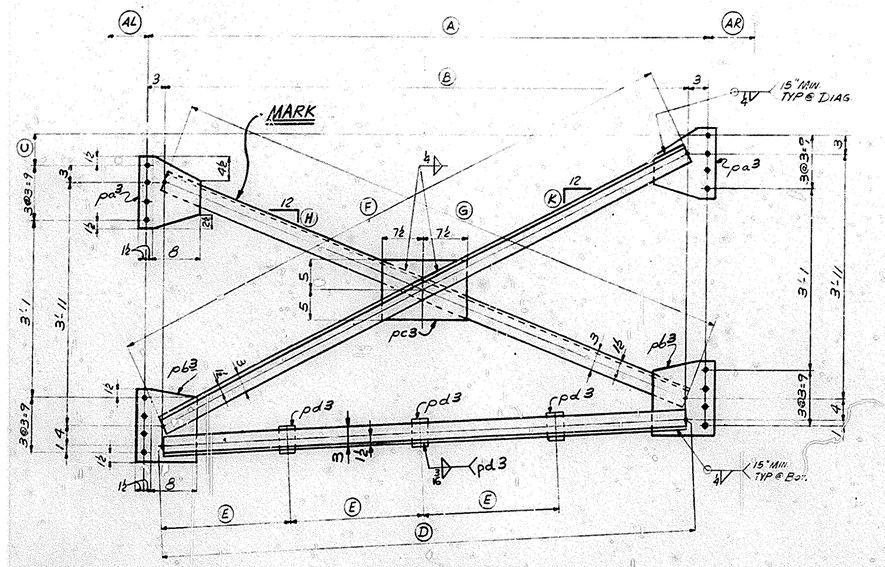

CROSS FRAMES-MK 36CF65 & 36CF72 TO 36CF78 (INCL).
(SEE TABLE BELOW FOR DIM.)

MARK	REQ'D	Ⓐ	Ⓑ	Ⓒ	Ⓓ	Ⓔ	Ⓕ	Ⓖ	Ⓗ	Ⓚ	Ⓐ̸	Ⓐ̸R
36CF65	6	9'-6½	9'-0½	5/16	9'-0½ (aa)	2'-3	9'-10⅜ (ab)	9'-10⅛ (ac)	5 3/16	5¼	2¾	2¾
36CF72	2	9'-6 5/16	9'-0 5/16	2⅞	9'-0 5/16 (ad)	2'-3	9'-11 3/16 (af)	9'-8⅞ (ag)	4⅞	5½	2¾	3
36CF73	ONE	9'-6¼	9'-0¼	2 9/16	9'-0¼ (ah)	2'-3	9'-11 1/16 (ak)	9'-9 (am)	4 15/16	5½	2¾	3
36CF74	ONE	9'-6¼	9'-0¼	2 7/16	9'-0¼ (ah)	2'-3	9'-11 (an)	9'-9 1/16 (ap)	4 15/16	5½	2¾	3
36CF75	4	9'-6½	9'-0½	2¼	9'-0½ (aa)	2'-3	9'-11 3/16 (af)	9'-9⅜ (as)	4 15/16	5 7/16	2¾	2¾
36CF76	ONE	9'-6¼	9'-0¼	2¼	9'-0¼ (ah)	2'-3	9'-10 15/16 (at)	9'-9⅛ (av)	4 15/16	5 7/16	2¾	3
36CF77	5	9'-6½	9'-0½	1 15/16	9'-0½ (aa)	2'-3	9'-11 (an)	9'-9½ (aw)	5	5 7/16	2¾	2¾
36CF78	ONE	8'-11½	8'-5½	1 9/16	8'-5½ (ax)	2'-1¼	9'-4½ (ay)	9'-3 3/16 (aab)	5⅜	5¾	6¼	6¼

NASHVILLE BRIDGE COMPANY

SHOP ORDER NO. B5727 | WORK ORDER NO. | CONTRACT NO. C6736 | ITEM

COMMONWEALTH OF KENTUCKY, DEPT. OF HIGHWAYS, BRIDGE
OVER NORTHWESTERN PKWY & 22ND ST., JEFFERSON COUNTY

FABRICATION BESSEMER PLANT

BILL NO. 36A | DRAWING NO. 36

MAT'L ASTM A36

6	36CF65		Cross Frame				
	12	aa	L 3x2½x5/16	9 0½		3905	132
	6	ab	L 3½x3x3/8	9 10⅜		3943	130
	6	ac	L 3½x3x3/8	9 10⅛			130
	12	pa3	PL 11x3/8	1 0	90 cuts 8@11	3909	409
	12	pb3	PL 11x3/8	1 0			
	6	pc3	PL 10x3/8	1 3	82x38-3 cuts 240		412
	18	pd3	BR 1½x3/8	0 3¾	STK	686	606
2	36CF72		Cross Frame				
	4	ad	L 3x2½x5/16	9 0 5/16		3905	132
	2	af	L 3½x3x3/8	9 11 3/16		3943	130
	2	ag	L 3½x3x3/8	9 8⅞			130
	4	pa3	PL 11x3/8	1 0	90 cuts 8@11	3909	409
	4	pb3	PL 11x3/8	1 0			
	2	pc3	PL 10x3/8	1 3	82x38-3 cuts 240		412
	6	pd3	BR 1½x3/8	0 3¾	STK	686	606
ONE	36CF73		Cross Frame				
	2	ah	L 3x2½x5/16	9 0¼		3905	132
	1	ak	L 3½x3x3/8	9 11 1/16		3943	130
	1	am	L 3½x3x3/8	9 9			130
	2	pa3	PL 11x3/8	1 0	90 cuts 8@11	3909	409
	2	pb3	PL 11x3/8	1 0			
	1	pc3	PL 10x3/8	1 3	82x38-3 cuts 240		412
	3	pd3	BR 1½x3/8	0 3¾	STK	686	606
ONE	36CF74		Cross Frame				
	2	ah	L 3x2½x5/16	9 0¼		3905	132
	1	an	L 3½x3x3/8	9 11		3943	130
	1	ap	L 3½x3x3/8	9 9 1/16			130
	2	pa3	PL 11x3/8	1 0	90 cuts 8@11	3909	409
	2	pb3	PL 11x3/8	1 0			
	1	pc3	PL 10x3/8	1 3	82x38-3 cut 240		412
	3	pd3	BR 1½x3/8	0 3¾	STK	686	606

SHEET TOTAL

NASHVILLE BRIDGE COMPANY

SHOP ORDER NO. B-5727 | WORK ORDER NO. | CONTRACT NO. C6736 | ITEM

COMMONWEALTH OF KENTUCKY, DEPT. OF HIGHWAYS, BRIDGE
OVER NORTHWESTERN PKWY & 22ND ST., JEFFERSON COUNTY

FABRICATION BESSEMER PLANT

BILL NO. 36B | DRAWING NO. 36

MAT'L ASTM A36

4	36CF75		Cross Frame				
	8	aa	L 3x2½x5/16	9 0½		3905	132
	4	af	L 3½x3x3/8	9 11 3/16		3943	130
	4	as	L 3½x3x3/8	9 7⅞			130
	8	pa3	PL 11x3/8	1 0	90 cuts 8@11	3909	409
	8	pb3	PL 11x3/8	1 0			
	4	pc3	PL 10x3/8	1 3	82x38-3 cuts 240		412
	12	pd3	BR 1½x3/8	0 3¾	STK	686	606
ONE	36CF76		Cross Frame				
	2	ah	L 3x2½x5/16	9 0¼		3905	132
	1	at	L 3½x3x3/8	9 10 15/16		3943	130
	1	av	L 3½x3x3/8	9 9⅛			130
	2	pa3	PL 11x3/8	1 0	90 cuts 8@11	3909	409
	2	pb3	PL 11x3/8	1 0			
	1	pc3	PL 10x3/8	1 3	82x38-3 cuts 240		412
	3	pd3	BR 1½x3/8	0 3¾	STK	686	606
5	36CF77		Cross Frame				
	10	an	L 3x2½x5/16	9 0½		3905	132
	5	ar	L 3½x3x3/8	9 11		3943	130
	5	aw	L 3½x3x3/8	9 9½			130
	10	pa3	PL 11x3/8	1 0	90 cuts 8@11	3909	409
	10	pb3	PL 11x3/8	1 0			
	5	pc3	PL 10x3/8	1 3	82x38-3 cuts 240		412
	15	pd3	BR 1½x3/8	0 3¾	STK	686	606
ONE	36CF78		Cross Frame				
	2	ax	L 3x2½x5/16	8 5½		3905	132
	1	ay	L 3½x3x3/8	9 4½		3943	130
	1	aab	L 3½x3x3/8	9 3 3/16			130
	2	pa3	PL 11x3/8	1 0	90 cuts 8@11	3909	409
	2	pb3	PL 11x3/8	1 0			
	1	pc3	PL 10x3/8	1 3	82x38-3 cuts 240		412
	3	pd3	BR 1½x3/8	0 3¾	STK	686	606

SHEET TOTAL

45

FOR GENERAL NOTES SEE DWG GN1
MAT'L ASTM A36

CROSS FRAME DETAILS IG4
BRIDGE OVER NORTHWESTERN PKWY & 22ND ST.
DEPT. OF HIGHWAYS, COMMONWEALTH OF KENTUCKY
JEFFERSON CTY. FAP IG4-2(34)1, SP56-273-11L
CONTRACTOR: MATTINGLY BRIDGE CO.

NASHVILLE BRIDGE COMPANY
NASHVILLE, TENN
BESSEMER PLANT

APPROVED FOR SHOP: WMF 7/17/70 CHIEF DRAFTSMAN; WRC 7/13/70 CHIEF ENGINEER
REVISION NOTES

RIVETS: NONE | HOLES: 1/16" OR NOTED | FIELD CONN. 7/8" HSB | SHOP PAINT } SEE GN1 | FIELD

DRAWN BY FK DATE 10-29-69 IN CHARGE-GATT. (TENSOR)
CHECKED BY VM DATE 11/26/69
DATE PRINTED

BILL OF MATERIAL NO. 36A & 36B | CONT. C6736 | S.O. B-5727 | DRAWING NO. 36

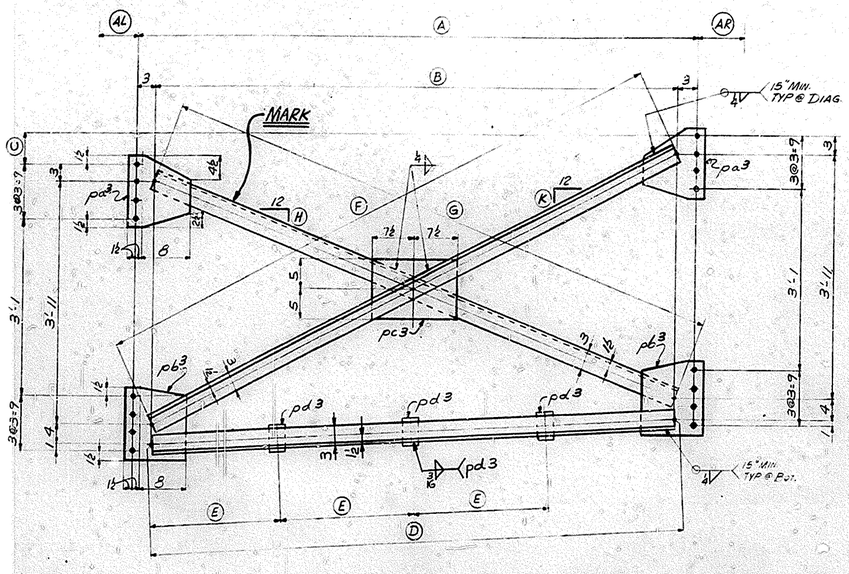

CROSS FRAMES MK 37CF79 To 37CF86 (INCL)
(SEE TABLE BELOW FOR DIM.)

MARK	REQ'D	A	B	C	D	E	F	G	H	K	AL	AR
37CF79	ONE	9'-1½	8'-7½	1 7/16	8'-7½ (aa)	2'-1¾	9'-6 5/16 (ab)	9'-5 1/16 (ac)	5¼	5⅝	6¼	4¼
37CF80	3	9'-3½	8'-9½	1 9/16	8'-9½ (ad)	2'-2¼	9'-8⅛ (af)	9'-6⅞ (ag)	5 3/16	5½	4¼	4¼
37CF81	4	9'-6½	9'-0½	⅞	9'-0½ (ah)	2'-3	9'-10 9/16 (ak)	9'-9 15/16 (am)	5⅛	5 5/16	2¾	2¾
37CF82	ONE	9'-6¼	9'-0¼	⅞	9'-0¼ (an)	2'-3	9'-10¾ (ap)	9'-9 1/16 (as)	5⅛	5 5/16	2¾	3
37CF83		9'-6¼	9'-0¼	⅝	9'-0¼ (an)	2'-3	9'-10¼ (at)	9'-9¾ (av)	5⅛	5 5/16	2¾	3
37CF84		9'-6¼	9'-0¼	7/16	9'-0¼ (an)	2'-3	9'-10 3/16 (aw)	9'-9 13/16 (ax)	5 3/16	5¼	2¾	3
37CF85		9'-6¼	9'-0¼	¼	9'-0¼ (an)	2'-3	9'-10⅛ (ay)	9'-9⅞ (aab)	5 3/16	5¼	2¾	3
37CF86	ONE	9'-6¼	9'-0¼	1/16	9'-0¼ (an)	2'-3	9'-10 1/16 (aac)	9'-10 (aad)	5 3/16	5¼	2¾	3

NASHVILLE BRIDGE COMPANY

SHOP ORDER NO. B5727 | WORK ORDER NO. | CONTRACT NO. C6736

COMMONWEALTH OF KENTUCKY, DEPT. OF HIGHWAYS, BRIDGE
OVER NORTHWESTERN PKWY & 22ND ST., JEFFERSON COUNTY

FABRICATION BESSEMER PLANT

BILL NO. 37A | DRAWING NO. 37

WEIGHTS BY | CHECKED BY

MAT'L ASTM A36

ONE	37CF79		CROSS FRAME					
		2	aa	L 3x2½x5/16	8 7½		3905	132
		1	ab	L 3½x3x⅜	9 6 5/16		3943	130
		1	ac	L 3½x3x⅜	9 5 1/16			130
		2	pa3	PL 11x⅜	1 0	90 cuts 8@11	3909	409
		2	pb3	PL 11x⅜	1 0			409
		1	pc3	PL 10x⅜	1 3	82x86-3 cuts 290		412
		3	pd3	BR 1½x⅜	0 3¾		STC 686	606
3	37CF80		CROSS FRAME					
		6	ad	L 3x2½x5/16	8 9½		3905	132
		3	af	L 3½x3x⅜	9 8⅛		3943	130
		3	ag	L 3½x3x⅜	9 6⅞			130
		6	pa3	PL 11x⅜	1 0	90 cuts 8@11	3909	409
		6	pb3	PL 11x⅜	1 0			409
		3	pc3	PL 10x⅜	1 3	82x86-3 cuts 290		412
		9	pd3	BR 1½x⅜	0 3¾		STC 686	606
4	37CF81		CROSS FRAME					
		8	ah	L 3x2½x5/16	9 0½		3905	132
		4	ak	L 3½x3x⅜	9 10 1/16		3943	130
		4	am	L 3½x3x⅜	9 9 15/16			130
		8	pa3	PL 11x⅜	1 0	90 cuts 8@11	3909	409
		8	pb3	PL 11x⅜	1 0			409
		4	pc3	PL 10x⅜	1 3	82x86-3 cuts 290		412
		12	pd3	BR 1½x⅜	0 3¾		STC 686	606
ONE	37CF82		CROSS FRAME					
		2	an	L 3x2½x5/16	9 0¼		3905	132
		1	ap	L 3½x3x⅜	9 10⅜		3943	130
		1	as	L 3½x3x⅜	9 9 1/16			130
		2	pa3	PL 11x⅜	1 0	90 cuts 8@11	3909	409
		2	pb3	PL 11x⅜	1 0			409
		1	pc3	PL 10x⅜	1 3	82x86-3 cuts 290		412
		3	pd3	BR 1½x⅜	0 3¾		STC 686	606

SHEET TOTAL

NASHVILLE BRIDGE COMPANY

SHOP ORDER NO. B-5727 | WORK ORDER NO. | CONTRACT NO. C6736

COMMONWEALTH OF KENTUCKY, DEPT. OF HIGHWAYS, BRIDGE
OVER NORTHWESTERN PKWY & 22ND ST., JEFFERSON COUNTY

FABRICATION BESSEMER PLANT

BILL NO. 37B | DRAWING NO. 37

WEIGHTS BY | CHECKED BY

MAT'L ASTM A36

ONE	37CF83		CROSS FRAME					
		2	an	L 3x2½x5/16	9 0¼		3905	132
		1	at	L 3½x3x⅜	9 10⅛		3943	130
		1	av	L 3½x3x⅜	9 9¾			130
		2	pa3	PL 11x⅜	1 0	90 cuts 8@11	3909	409
		2	pb3	PL 11x⅜	1 0			409
		1	pc3	PL 10x⅜	1 3	82x86-3 cuts 290		412
		3	pd3	BR 1½x⅜	0 3¾		STC 686	606
ONE	37CF84		CROSS FRAME					
		2	an	L 3x2½x5/16	9 0¼		3905	132
		1	aw	L 3½x3x⅜	9 10 3/16		3943	130
		1	ax	L 3½x3x⅜	9 9 13/16			130
		2	pa3	PL 11x⅜	1 0	90 cuts 8@11	3909	409
		2	pb3	PL 11x⅜	1 0			409
		1	pc3	PL 10x⅜	1 3	82x86-3 cuts 290		412
		3	pd3	BR 1½x⅜	0 3¾		STC 686	606
ONE	37CF85		CROSS FRAME					
		2	an	L 3x2½x5/16	9 0¼		3905	132
		1	ay	L 3½x3x⅜	9 10⅛		3943	130
		1	aab	L 3½x3x⅜	9 9⅞			130
		2	pa3	PL 11x⅜	1 0	90 cuts 8@11	3909	409
		2	pb3	PL 11x⅜	1 0			409
		1	pc3	PL 10x⅜	1 3	82x86-3 cuts 290		412
		3	pd3	BR 1½x⅜	0 3¾		STC 686	606
ONE	37CF86		CROSS FRAME					
		2	an	L 3x2½x5/16	9 0¼		3905	132
		1	aac	L 3½x3x⅜	9 10 1/16		3943	130
		1	aad	L 3½x3x⅜	9 10			130
		2	pa3	PL 11x⅜	1 0	90 cuts 8@11	3909	409
		2	pb3	PL 11x⅜	1 0			409
		1	pc3	PL 10x⅜	1 3	82x86-3 cuts 290		412
		3	pd3	BR 1½x⅜	0 3¾		STC 686	606

SHEET TOTAL

46

FOR GENERAL NOTES SEE DWG GN1
MAT'L ASTM A36

APPROVED FOR SHOP
WMF 7/15/70 CHIEF DRAFTSMAN
WKS 7/17/70 CHIEF ENGINEER
REVISION NOTES

CROSS FRAME DETAILS I64
BRIDGE OVER NORTHWESTERN PKWY & 22ND ST.
DEPT. OF HIGHWAYS, COMMONWEALTH OF KENTUCKY
JEFFERSON CY. FAP 164-2(34), SPFC-273-116
CONTRACTOR: MATTINGLY BRIDGE CO.

NASHVILLE BRIDGE COMPANY
NASHVILLE, TENN.
BESSEMER PLANT

RIVETS NONE | HOLES 3/4 DP NOTED | FIELD CONN. 3/4 HSB | SHOP PAINT | FIELD
DRAWN BY FK IN CHARGE GATT (TENSOR) DATE 10-29-69
CHECKED BY VM DATE 11/24/69
DATA PRINTED

BILLS MATERIAL NO. 37A & 37B | CONT. C6736 | S.O. B-5727 | DRAWING NO. 37

A B C D E F G H K M N P S T V W X Y

R. K. ELLIOTT CO. PGH. PA. REORDER A-7887

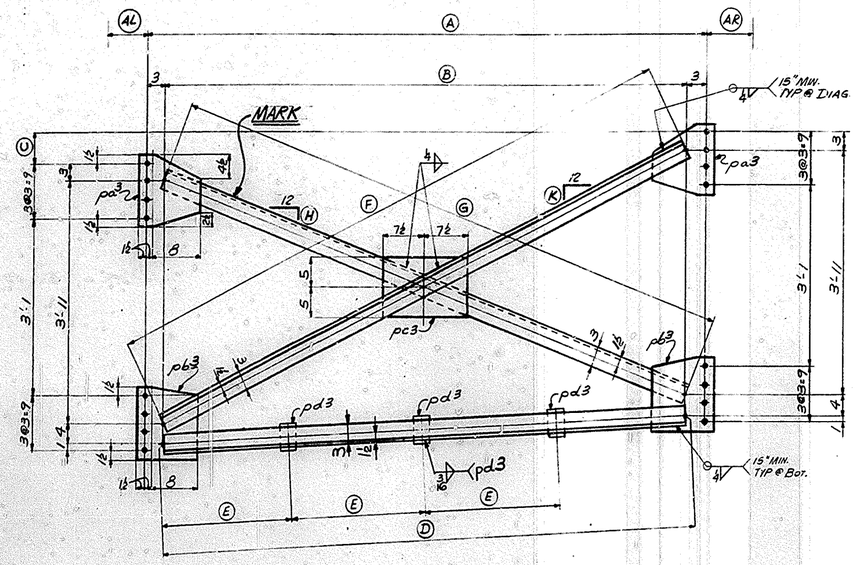

CROSS FRAMES MK 38CF87 to 38CF90 (INCL)
(SEE TABLE BELOW FOR DIM.)

MARK	REQ'D	Ⓐ	Ⓑ	Ⓒ	Ⓓ	Ⓔ	Ⓕ	Ⓖ	Ⓗ	Ⓚ	Ⓐ̸	Ⓐ̸
38CF87	ONE	9'-6½	9'-0½	9/16	9'-0½ (aa)	2'-3	9'-10½ (ab)	9'-10 (ac)	5⅛	5¼	2¾	2¾
38CF88	ONE	9'-6½	9'-0½	⅜	9'-0½ (aa)	2'-3	9'-10⅜ (ad)	9'-10 1/16 (af)	5⅛	5¼	2¾	2¾
38CF89	3	9'-6½	9'-0½	3/16	9'-0½ (aa)	2'-3	9'-10 5/16 (ag)	9'-10 3/16 (ah)	5 3/16	5¼	2¾	2¾
38CF90	ONE	9'-6½	9'-0½	0	9'-0½ (aa)	2'-3	9'-10¼ (ak)	9'-10¼ (am)	5 3/16	5 3/16	2¾	2¾

NASHVILLE BRIDGE COMPANY

SHOP ORDER NO. B-5727
WORK ORDER NO.
CONTRACT NO. C6736
ITEM

COMMONWEALTH OF KENTUCKY, DEPT. OF HIGHWAYS, BRIDGE
OVER NORTHWESTERN PKWY & 22ND ST., JEFFERSON COUNTY

FABRICATION BESSEMER PLANT

BILL NO. 38
DRAWING NO. 38

WEIGHTS BY
CHECKED BY

SHOP	SHIPPING MARK	ITEM QUANT	ASSEMBLY MARK	SECTION	FINISHED LENGTH FT IN	ORDERED LENGTH FT IN	P.O. NO	ITEM NO	REMARKS	SPECIF. WEIGHT	A.I.S.C. WEIGHT
				MAT'L ASTM A36							
ONE	38CF87			CROSS FRAME							
		2	aa	L 3x2½x⅜	9 0½		3905	132			
		1	ab	L 3½x3x⅜	9 10½		3943	130			
		1	ac	L 3½x3x⅜	9 10		I	130			
		2	pa3	PL 11x⅜	1 0	90 CUTS @ 11	3909	409			
		2	pb3	PL 11x⅜	1 0	I	I	409			
		1	pc3	PL 10x⅜	1 3	8¾x38'-3 CUTS 240	I	412			
		3	pd3	BR 1½x⅜	0 3¾		STK 68C	606			
ONE	38CF88			CROSS FRAME							
		2	aa	L 3x2½x⅜	9 0½		3905	132			
		1	ad	L 3½x3x⅜	9 10⅜		3943	130			
		1	af	L 3½x3x⅜	9 10 1/16		I	130			
		2	pa3	PL 11x⅜	1 0	90 CUTS @ 11	3909	409			
		2	pb3	PL 11x⅜	1 0	I	I	409			
		1	pc3	PL 10x⅜	1 3	8¾x38'-3 CUTS 240	I	412			
		3	pd3	BR 1½x⅜	0 3¾		STK 68C	606			
3	38CF89			CROSS FRAME							
		6	aa	L 3x2½x⅜	9 0½		3905	132			
		3	ag	L 3½x3x⅜	9 10 5/16		3943	130			
		3	ah	L 3½x3x⅜	9 10 3/16		I	130			
		6	pa3	PL 11x⅜	1 0	90 CUTS @ 11	3909	409			
		6	pb3	PL 11x⅜	1 0	I	I	409			
		3	pc3	PL 10x⅜	1 3	8¾x38'-3 CUTS 240	I	412			
		9	pd3	BR 1½x⅜	0 3¾		STK 68C	606			
ONE	38CF90			CROSS FRAME							
		2	aa	L 3x2½x⅜	9 0½		3905	132			
		1	ak	L 3½x3x⅜	9 10¼		3943	130			
		1	am	L 3½x3x⅜	9 10¼		I	130			
		2	pa3	PL 11x⅜	1 0	90 CUTS @ 11	3909	409			
		2	pb3	PL 11x⅜	1 0	I	I	409			
		1	pc3	PL 10x⅜	1 3	8¾x38'-3 CUTS 240	I	412			
		3	pd3	BR 1½x⅜	0 3¾		STK 68C	606			
						SHEET TOTAL					

47

FOR GENERAL NOTES SEE DWG GN1
MAT'L ASTM A36

APPROVED FOR SHOP
CHIEF DRAFTSMAN
CHIEF ENGINEER
REVISION NOTES

CROSS FRAME DETAILS I64
BRIDGE OVER NORTHWESTERN PKWY & 22ND ST.
DEPT. OF HIGHWAYS, COMMONWEALTH OF KENTUCKY
JEFFERSON CTY. FAP I64-2(34)1, SP56-273-11L
CONTRACTOR: MATHISLY BRIDGE CO.

NASHVILLE BRIDGE COMPANY
NASHVILLE, TENN.
BESSEMER PLANT

RIVETS 11/16 1/16
HOLES 13/16 OR NOTED
FIELD CONN. 7/8 HSB
SHOP PAINT } SEE
FIELD } GN1

DRAWN BY FK DATE 10-29-69
IN CHARGE OF ATT. (TENSON)
CHECKED BY VM DATE 11/24/69
DATE PRINTED

BILL OF MATERIAL NO. 38
CONT. C6736
S.O. B-5727
DRAWING NO. 38

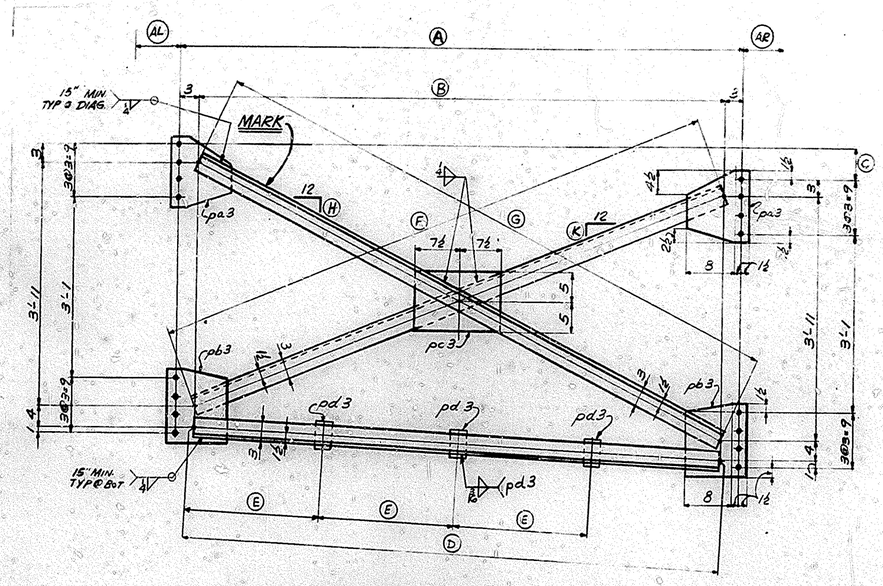

CROSS FRAMES MK 39CF93, 39CF94, 39CF95, AND 39CF97 TO 39CF101 (INCL)
(SEE TABLE BELOW FOR DIM.)

MARK	REQ'D	Ⓐ	Ⓑ	Ⓒ	Ⓓ	Ⓔ	Ⓕ	Ⓖ	Ⓗ	Ⓚ	Ⓐ̲ⓛ	Ⓐ̲ⓡ
39CF93	5	9'-6½	9'-0½	9/16	9'-0½ (aa)	2'-3	9'-10 (ab)	9'-10½ (ac)	5/4	5/8	2¾	2¾
39CF94	ONE	9'-6½	9'-0½	1 3/16	9'-0½ (ad)	2'-3	9'-9¾ (ad)	9'-10¾ (af)	5 5/16	5/16	2¾	2¾
39CF95	7	9'-6½	9'-0½	1 3/8	9'-0½ (ae)	2'-3	9'-9 11/16 (ag)	9'-10 13/16 (ah)	5 3/8	5/16	2¾	2¾
39CF97	ONE	9'-6½	9'-0½	1 9/16	9'-0½ (aa)	2'-3	9'-9⅝ (ak)	9'-10⅞ (am)	5⅜	5	2¾	2¾
39CF98		9'-6½	9'-0½	1¾	9'-0½ (aa)	2'-3	9'-9 9/16 (an)	9'-10 5/16 (ap)	5⅜	5	2¾	2¾
39CF99		9'-6¼	9'-0¼	2	9'-0¼ (as)	2'-3	9'-9¼ (at)	9'-10 13/16 (ah)	5 7/16	5	3	2¾
39CF100		9'-6¼	9'-0¼	1 13/16	9'-0¼ (as)	2'-3	9'-9 5/16 (av)	9'-10¾ (af)	5 7/16	5	3	2¾
39CF101	ONE	9'-6¼	9'-0¼	1⅝	9'-0¼ (as)	2'-3	9'-9⅜ (aw)	9'-10 1/16 (ax)	5⅜	5	3	2¾

NASHVILLE BRIDGE COMPANY

SHOP ORDER NO. B5727 — WORK ORDER NO. — CONTRACT NO. C6736 — ITEM

COMMONWEALTH OF KENTUCKY, DEPT. OF HIGHWAYS, BRIDGE OVER NORTHWESTERN PKWY & 22ND ST., JEFFERSON COUNTY

BILL NO. 39A — DRAWING NO. 39

FABRICATION BESSEMER PLANT — WEIGHTS BY — CHECKED BY

MAT'L ASTM A36

SHOP	SHIPPING MARK	ITEM QUAN.	ASSEMBLY MARK		SECTION	FINISHED LENGTH FT. IN.	ORDERED LENGTH FT. IN.	P.O. NO.	ITEM NO.	REMARKS	SPECIF. WEIGHT	ATSC WEIGHT
	5	39CF93			Cross Frame							
		10	aa		L 3x2½x5/16	9 0½		3905	132			
		5	ab		L 3½x3x3/8	9 10		3943	130			
		5	ac		L 3½x3x3/8	9 10½		⊥	130			
		10	pa3		PL 11x3/8	1 0	90 cuts @ 11	3909	409			
		10	pb3		PL 11x3/8	1 0	⊥		409			
		5	pc3		PL 10x3/8	1 3	82x38:3 cuts 840	⊥	412			
		15	pd3		BR 1½x3/8	0 3¾		STC GBC	606			
	ONE	39CF94			Cross Frame							
		2	aa		L 3x2½x5/16	9 0½		3905	132			
		1	ad		L 3½x3x3/8	9 9¾		3943	130			
		1	af		L 3½x3x3/8	9 10¾		⊥	130			
		2	pa3		PL 11x3/8	1 0	90 cuts @ 11	3909	409			
		2	pb3		PL 11x3/8	1 0	⊥		409			
		1	pc3		PL 10x3/8	1 3	82x38:3 cuts 840	⊥	412			
		3	pd3		BR 1½x3/8	0 3¾		STC GBC	606			
	7	39CF95			Cross Frame							
		14	aa		L 3x2½x5/16	9 0½		3905	132			
		7	ag		L 3½x3x3/8	9 9 11/16		3943	130			
		7	ah		L 3½x3x3/8	9 10 13/16		⊥	130			
		14	pa3		PL 11x3/8	1 0	90 cuts @ 11	3909	409			
		14	pb3		PL 11x3/8	1 0	⊥		409			
		7	pc3		PL 10x3/8	1 3	82x38:3 cuts 840	⊥	412			
		21	pd3		BR 1½x3/8	0 3¾		STC GBC	606			
	ONE	39CF97			Cross Frame							
		2	aa		L 3x2½x5/16	9 0½		3905	132			
		1	ak		L 3½x3x3/8	9 9⅝		3943	130			
		1	am		L 3½x3x3/8	9 10⅞		⊥	130			
		2	pa3		PL 11x3/8	1 0	90 cuts @ 11	3909	409			
		2	pb3		PL 11x3/8	1 0	⊥		409			
		1	pc3		PL 10x3/8	1 3	82x38:3 cuts 840	⊥	412			
		3	pd3		BR 1½x3/8	0 3¾		STC GBC	606			

SHEET TOTAL

NASHVILLE BRIDGE COMPANY

SHOP ORDER NO. B-5727 — WORK ORDER NO. — CONTRACT NO. C6736 — ITEM

COMMONWEALTH OF KENTUCKY, DEPT. OF HIGHWAYS, BRIDGE OVER NORTHWESTERN PKWY & 22ND ST., JEFFERSON COUNTY

BILL NO. 39B — DRAWING NO. 39

FABRICATION BESSEMER PLANT — WEIGHTS BY — CHECKED BY

MAT'L ASTM A36

SHOP	SHIPPING MARK	ITEM QUAN.	ASSEMBLY MARK		SECTION	FINISHED LENGTH FT. IN.	ORDERED LENGTH FT. IN.	P.O. NO.	ITEM NO.	REMARKS	SPECIF. WEIGHT	ATSC WEIGHT
	ONE	39CF98			Cross Frame							
		2	aa		L 3x2½x5/16	9 0½		3905	132			
		1	am		L 3½x3x3/8	9 9⅞		3943	130			
		1	ap		L 3½x3x3/8	9 10¾		⊥	130			
		2	pa3		PL 11x3/8	1 0	90 cuts @ 11	3909	409			
		2	pb3		PL 11x3/8	1 0	⊥		409			
		1	pc3		PL 10x3/8	1 3	82x38:3 cuts 840	⊥	412			
		3	pd3		BR 1½x3/8	0 3¾		STC GBC	606			
	ONE	39CF99			Cross Frame							
		2	as		L 3x2½x5/16	9 0¼		3905	132			
		1	at		L 3½x3x3/8	9 9¼		3943	130			
		1	ah		L 3½x3x3/8	9 10 13/16		⊥	130			
		2	pa3		PL 11x3/8	1 0	90 cuts @ 11	3909	409			
		2	pb3		PL 11x3/8	1 0	⊥		409			
		1	pc3		PL 10x3/8	1 3	82x38:3 cut 840	⊥	412			
		3	pd3		BR 1½x3/8	0 3¾		STC GBC	606			
	ONE	39CF100			Cross Frame							
		2	as		L 3x2½x5/16	9 0¼		3905	132			
		1	av		L 3½x3x3/8	9 9 5/16		3943	130			
		1	af		L 3½x3x3/8	9 10¾		⊥	130			
		2	pa3		PL 11x3/8	1 0	90 cuts @ 11	3909	409			
		2	pb3		PL 11x3/8	1 0	⊥		409			
		1	pc3		PL 10x3/8	1 3	82x38:3 cuts 840	⊥	412			
		3	pd3		BR 1½x3/8	0 3¾		STC GBC	606			
	ONE	39CF101			Cross Frame							
		2	as		L 3x2½x5/16	9 0¼		3905	132			
		1	aw		L 3½x3x3/8	9 9⅜		3943	130			
		1	ax		L 3½x3x3/8	9 10 1/16		⊥	130			
		2	pa3		PL 11x3/8	1 0	90 cuts @ 11	3909	409			
		2	pb3		PL 11x3/8	1 0	⊥		409			
		1	pc3		PL 10x3/8	1 3	82x38:3 cuts 840	⊥	412			
		3	pd3		BR 1½x3/8	0 3¾		STC GBC	606			

SHEET TOTAL

48

FOR GENERAL NOTES SEE DWG GN1
MAT'L ASTM A36

CROSS FRAME DETAILS I64
BRIDGE OVER NORTHWESTERN PKWY & 22ND ST.
DEPT. OF HIGHWAYS, COMMONWEALTH OF KENTUCKY
JEFFERSON CTY. FAP 264-2(34), SP56-273-1(L)
CONTRACTOR: MATTINGLY BRIDGE CO.

NASHVILLE BRIDGE COMPANY
NASHVILLE, TENN — BESSEMER PLANT

APPROVED FOR SHOP — CHIEF DRAFTSMAN — CHIEF ENGINEER — REVISION NOTES

RIVETS NONE — HOLES 1/16" OR NOTED — FIELD CONN. 3/4" HSB — SHOP PAINT SEE GN1 — FIELD

DRAWN BY FK — DATE 10-29-69 — IN CHARGE — DATE
CHECKED BY — DATE 11/24/69 — DATE PRINTED

SHELF MATERIAL NO. 39A & 39B — CONT. C6736 — S.O. B-5727 — DRAWING NO. 39

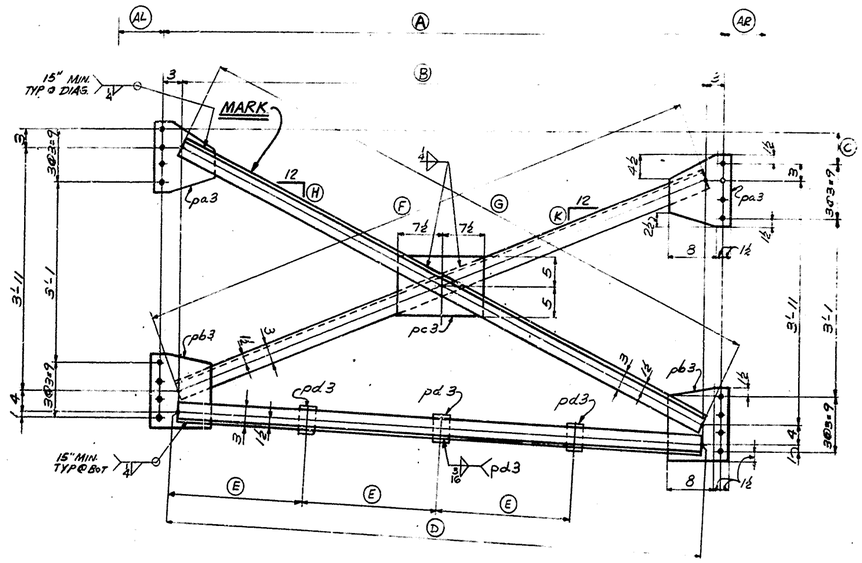

CROSS FRAMES MK 40CF102 TO 40CF109 (INCL)
(SEE TABLE BELOW FOR DIM.)

MARK	REQ'D	Ⓐ	Ⓑ	Ⓒ	Ⓓ	Ⓔ	Ⓕ	Ⓖ	Ⓗ	Ⓚ	Ⓐ̸	Ⓐ̸
40CF102	ONE	9'-6¼	9'-0¼	1 7/16	9'-0¼ (aa)	2'-3	9'-9 7/16 (ab)	9'-10 9/16 (ac)	5 3/8	5 1/16	3	2 3/4
40CF103	ONE	9'-6¼	9'-0¼	1¼	9'-0¼ (aa)	2'-3	9'-9½ (ad)	9'-10½ (af)	5 3/8	5 1/16	3	2 3/4
40CF104	3	9'-6½	9'-0½	2 1/16	9'-0½ (ag)	2'-3	9'-9 5/16 (ah)	9'-11¼ (ak)	5 7/16	4 15/16	2 3/4	2 3/4
40CF105	2	9'-6½	9'-0½	2¼	9'-0½ (ag)	2'-3	9'-9 3/8 (am)	9'-11⅛ (an)	5 7/16	4 15/16	2 3/4	2 3/4
40CF106	5	9'-6½	9'-0½	2 1/16	9'-0½ (ag)	2'-3	9'-9 7/16 (ab)	9'-11 1/16 (ap)	5 7/16	5	2 3/4	2 3/4
40CF107	ONE	9'-6½	9'-0½	1 7/8	9'-0½ (ag)	2'-3	9'-9½ (ad)	9'-11 (as)	5 3/8	5	2 3/4	2 3/4
40CF108	5	9'-6½	9'-0½	1 11/16	9'-0½ (ag)	2'-3	9'-9 9/16 (at)	9'-10 15/16 (av)	5 3/8	5	2 3/4	2 3/4
40CF109	ONE	9'-6½	9'-0½	½	9'-0½ (ag)	2'-3	9'-10 1/16 (aw)	9'-10 7/16 (ax)	5¼	5 1/16	2 3/4	2 3/4

NASHVILLE BRIDGE COMPANY

SHOP ORDER NO. B5727 | WORK ORDER NO. | CONTRACT NO. C6736 | BILL NO. 40A | DRAWING NO. 40

COMMONWEALTH OF KENTUCKY, DEPT. OF HIGHWAYS, BRIDGE
OVER NORTHWESTERN PKWY & 22ND ST., JEFFERSON COUNTY

FABRICATION BESSEMER PLANT

ITEM | WEIGHTS BY | CHECKED BY

MAT'L ASTM A36

SHIP	SHIPPING MARK	ITEM COUNT	ASSEMBLY MARK	SECTION	FINISHED LENGTH	ORDERED LENGTH	P.O. NO.	ITEM NO.	REMARKS	SPECIF. WEIGHT	ACTUAL WEIGHT
	ONE		40CF102	Cross Frame							
			2 aa	L 3x2½x5/16	9 0¼			3905	132		
			1 ab	L 3½x3x3/8	9 9 7/16			3943	130		
			1 ac	L 3½x3x3/8	9 10 9/16			⊥	130		
			2 pa3	PL 11x3/8	1 0	90	Cuts 8@11	3909	409		
			2 pb3	PL 11x3/8	1 0	⊥		}	409		
			1 pc3	PL 10x3/8	1 3	82x38½3	Cuts 240	⊥	412		
			3 pd3	BR 1/2x3/8	0 3¾			STC 606	606		
	ONE		40CF103	Cross Frame							
			2 aa	L 3x2½x5/16	9 0¼			3905	132		
			1 ad	L 3½x3x3/8	9 9½			3943	130		
			1 af	L 3½x3x3/8	9 10½			⊥	130		
			2 pa3	PL 11x3/8	1 0	90	Cuts 8@11	3909	409		
			2 pb3	PL 11x3/8	1 0	⊥		}	409		
			1 pc3	PL 10x3/8	1 3	82x38½3	Cuts 240	⊥	412		
			3 pd3	BR 1/2x3/8	0 3¾			STC 606	606		
	3		40CF104	Cross Frame							
			6 ag	L 3x2½x5/16	9 0¼			3905	132		
			3 ah	L 3½x3x3/8	9 9 5/16			3943	130		
			3 ak	L 3½x3x3/8	9 11¼			⊥	130		
			6 pa3	PL 11x3/8	1 0	90	Cuts 8@11	3909	409		
			6 pb3	PL 11x3/8	1 0	⊥		}	409		
			3 pc3	PL 10x3/8	1 3	82x38½3	Cuts 240	⊥	412		
			9 pd3	BR 1/2x3/8	0 3¾			STC 606	606		
	2		40CF105	Cross Frame							
			4 ag	L 3x2½x5/16	9 0¼			3905	132		
			2 am	L 3½x3x3/8	9 9⅜			3943	130		
			2 an	L 3½x3x3/8	9 11⅛			⊥	130		
			4 pa3	PL 11x3/8	1 0	90	Cuts 8@11	3909	409		
			4 pb3	PL 11x3/8	1 0	⊥		}	409		
			2 pc3	PL 10x3/8	1 3	82x38½3	Cuts 240	⊥	412		
			6 pd3	BR 1/2x3/8	0 3¾			STC 606	606		

SHEET TOTAL

NASHVILLE BRIDGE COMPANY

SHOP ORDER NO. B-5727 | WORK ORDER NO. | CONTRACT NO. C6736 | BILL NO. 40B | DRAWING NO. 40

COMMONWEALTH OF KENTUCKY, DEPT. OF HIGHWAYS, BRIDGE
OVER NORTHWESTERN PKWY & 22ND ST., JEFFERSON COUNTY

FABRICATION BESSEMER PLANT

ITEM | WEIGHTS BY | CHECKED BY

MAT'L ASTM A36

SHIP	SHIPPING MARK	ITEM COUNT	ASSEMBLY MARK	SECTION	FINISHED LENGTH	ORDERED LENGTH	P.O. NO.	ITEM NO.	REMARKS	SPECIF. WEIGHT	ACTUAL WEIGHT
	5		40CF106	Cross Frame							
			10 ag	L 3x2½x5/16	9 0¼			3905	132		
			5 ab	L 3½x3x3/8	9 9 7/16			3943	130		
			5 ap	L 3½x3x3/8	9 11 1/16			⊥	130		
			10 pa3	PL 11x3/8	1 0	90	Cuts 8@11	3909	409		
			10 pb3	PL 11x3/8	1 0	⊥		}	409		
			5 pc3	PL 10x3/8	1 3	82x38½3	Cuts 240	⊥	412		
			15 pd3	BR 1/2x3/8	0 3¾			STC 606	606		
	ONE		40CF107	Cross Frame							
			2 ag	L 3x2½x5/16	9 0¼			3905	132		
			1 ad	L 3½x3x3/8	9 9½			3943	130		
			1 as	L 3½x3x3/8	9 11			⊥	130		
			2 pa3	PL 11x3/8	1 0	90	Cuts 8@11	3909	409		
			2 pb3	PL 11x3/8	1 0	⊥		}	409		
			1 pc3	PL 10x3/8	1 3	82x38½3	Cuts 240	⊥	412		
			3 pd3	BR 1/2x3/8	0 3¾			STC 606	606		
	5		40CF108	Cross Frame							
			10 ag	L 3x2½x5/16	9 0¼			3905	132		
			5 at	L 3½x3x3/8	9 9 9/16			3943	130		
			5 av	L 3½x3x3/8	9 10 15/16			⊥	130		
			10 pa3	PL 11x3/8	1 0	90	Cuts 8@11	3909	409		
			10 pb3	PL 11x3/8	1 0	⊥		}	409		
			5 pc3	PL 10x3/8	1 3	82x38½3	Cuts 240	⊥	412		
			15 pd3	BR 1/2x3/8	0 3¾			STC 606	606		
	ONE		40CF109	Cross Frame							
			2 ag	L 3x2½x5/16	9 0¼			3905	132		
			1 aw	L 3½x3x3/8	9 10 1/16			3943	130		
			1 ax	L 3½x3x3/8	9 10⅞			⊥	130		
			2 pa3	PL 11x3/8	1 0	90	Cuts 8@11	3909	409		
			2 pb3	PL 11x3/8	1 0	⊥		}	409		
			1 pc3	PL 10x3/8	1 3	82x38½3	Cuts 240	⊥	412		
			3 pd3	BR 1/2x3/8	0 3¾			STC 606	606		

SHEET TOTAL

49

FOR GENERAL NOTES SEE DWG GN1
MATL ASTM A36

CROSS FRAME DETAILS I 64
BRIDGE OVER NORTHWESTERN PKWY & 22ND ST.
DEPT. OF HIGHWAYS, COMMONWEALTH OF KENTUCKY
JEFFERSON CTY: FAP I 64-2(34)1, SP56-279-11L
CONTRACTOR: MATTINGLY BRIDGE CO.

NASHVILLE BRIDGE COMPANY
NASHVILLE, TENN
[redacted] BESSEMER PLANT

APPROVED FOR SHOP
WME 7/17/70 Chief Draftsman
AAK 7/17/70 Chief Engineer
Revision Notes

Rivets NONE 13/16 ø or noted
Hole
Field Conn. ø HSB
Shop Paint } SEE GN1
Field
Drawn by FK Date 10-27-69 In Charge Draft. (Typed)
Checked by VM Date 11/24/69
Date Printed [redacted]

Bill Material No. 40A & 40B | Cont. C6736 | S.O. B-5727 | Drawing No. 40

R. A. ELLIOTT CO. PGH. PA. HIGHLAND 1-7807

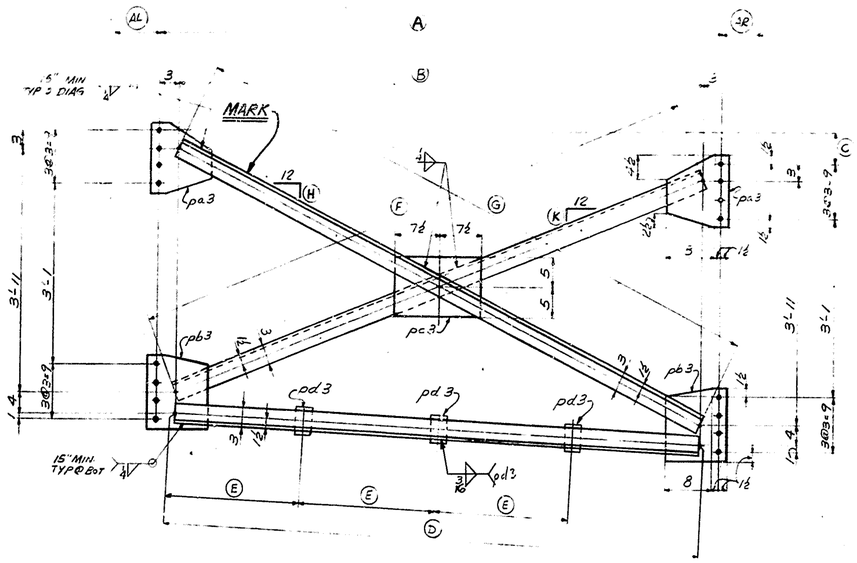

CROSS FRAMES MK 41CF110 TO 41CF118 (INCL)
(SEE TABLE BELOW FOR DIM.)

MARK	REQ'D	Ⓐ	Ⓔ	Ⓒ	Ⓓ	Ⓔ	Ⓕ	Ⓖ	Ⓗ	Ⓚ	Ⓐ₁	Ⓐ₂
41CF110	ONE	9'-6 1/2	9'-0 1/2	11/16	9'-0 1/2 (aa)	2'-3	9'-9 15/16 (ab)	9'-10 1/2 (ac)	5 1/4	5 1/8	2 3/4	2 3/4
41CF112	ONE	9'-6 1/2	9'-0 1/2	1 1/16	9'-0 1/2 (aa)	2'-3	9'-9 13/16 (ad)	9'-10 11/16 (af)	5 5/16	5 1/16	2 3/4	2 3/4
41CF113	2	9'-6 9/16	9'-0 9/16	2 11/16	9'-0 9/16 (ak)	2'-3	9'-9 3/16 (ag)	9'-11 5/16 (ah)	5 1/2	4 7/8	2 3/4	2 3/4
41CF114	ONE	9'-6 5/16	9'-0 5/16	2 15/16	9'-0 5/16 (am)	2'-3	9'-8 7/8 (an)	9'-11 3/16 (ap)	5 9/16	4 7/8	3	2 3/4
41CF115		9'-6 5/16	9'-0 5/16	2 3/4	9'-0 5/16 (am)	2'-3	9'-8 15/16 (as)	9'-11 1/8 (at)	5 1/2	4 15/16	3	2 3/4
41CF116		9'-6 1/4	9'-0 1/4	2 9/16	9'-0 1/4 (av)	2'-3	9'-9 (aw)	9'-11 1/16 (ax)	5 1/2	4 7/8	3	2 3/4
41CF117		9'-6 1/4	9'-0 1/4	2 3/8	9'-0 1/4 (av)	2'-3	9'-9 1/8 (ay)	9'-10 15/16 (aab)	5 1/2	4 15/16	3	2 3/4
41CF118	ONE	9'-6 9/16	9'-0 9/16	3 3/8	9'-0 9/16 (ak)	2'-3	9'-8 15/16 (as)	9'-11 5/8 (aac)	5 9/16	4 13/16	2 3/4	2 3/4

NASHVILLE BRIDGE COMPANY

SHOP ORDER NO B5727 | WORK ORDER NO | CONTRACT NO C6736 | ITEM

COMMONWEALTH OF KENTUCKY, DEPT. OF HIGHWAYS, BRIDGE
OVER NORTHWESTERN PKWY & 22ND ST., JEFFERSON COUNTY

FABRICATION BESSEMER PLANT

BILL NO 41A | DRAWING NO 41

WEIGHTS BY | CHECKED BY

MAT'L ASTM A36

ONE 41CF110 CROSS FRAME
2 aa L 3x2 1/2x5/16 9 0 1/2 3905 132
1 ab L 3 1/2x3x3/8 9 9 15/16 3943 130
1 ac L 3 1/2x3x3/8 9 10 1/2 ⊥ 130
2 pa3 PL 11x3/8 1 0 90 CUTS @11 3909 409
2 pb3 PL 11x3/8 1 0 ⊥ 409
1 pc3 PL 10x3/8 1 3 82x38-3 CUTS 240 ⊥ 412
3 pd3 BR 1 1/2x3/8 0 3 3/4 STC 68C 606

ONE 41CF112 CROSS FRAME
2 aa L 3x2 1/2x5/16 9 0 1/2 3905 132
1 ad L 3 1/2x3x3/8 9 9 13/16 3943 130
1 af L 3 1/2x3x3/8 9 10 11/16 ⊥ 130
2 pa3 PL 11x3/8 1 0 90 CUTS @11 3909 409
2 pb3 PL 11x3/8 1 0 ⊥ 409
1 pc3 PL 10x3/8 1 3 82x38-3 CUTS 240 ⊥ 412
3 pd3 BR 1 1/2x3/8 0 3 3/4 STC 68C 606

2 41CF113
4 ak L 3x2 1/2x5/16 9 0 9/16 3905 132
2 ag L 3 1/2x3x3/8 9 9 3/16 3943 130
2 ah L 3 1/2x3x3/8 9 11 5/16 ⊥ 130
4 pa3 PL 11x3/8 1 0 90 CUTS @11 3909 409
4 pb3 PL 11x3/8 1 0 ⊥ 409
2 pc3 PL 10x3/8 1 3 82x38-3 CUTS 240 ⊥ 412
6 pd3 BR 1 1/2x3/8 0 3 3/4 STC 68C 606

ONE 41CF114 CROSS FRAME
2 am L 3x2 1/2x5/16 9 0 5/16 3905 132
1 an L 3 1/2x3x3/8 9 8 3/8 3943 130
1 ap L 3 1/2x3x3/8 9 11 3/16 ⊥ 130
2 pa3 PL 11x3/8 1 0 90 CUTS @11 3909 409
2 pb3 PL 11x3/8 1 0 ⊥ 409
1 pc3 PL 10x3/8 1 3 82x38-3 CUTS 240 ⊥ 412
3 pd3 BR 1 1/2x3/8 0 3 3/4 STC 68C 606

SHEET TOTAL

NASHVILLE BRIDGE COMPANY

SHOP ORDER NO B-5727 | WORK ORDER NO | CONTRACT NO C6736 | ITEM

COMMONWEALTH OF KENTUCKY, DEPT. OF HIGHWAYS, BRIDGE
OVER NORTHWESTERN PKWY & 22ND ST., JEFFERSON COUNTY

FABRICATION BESSEMER PLANT

BILL NO 41B | DRAWING NO 41

WEIGHTS BY | CHECKED BY

MAT'L ASTM A36

ONE 41CF115 CROSS FRAME
2 am L 3x2 1/2x5/16 9 0 5/16 3905 132
1 as L 3 1/2x3x3/8 9 8 15/16 3943 130
1 at L 3 1/2x3x3/8 9 11 1/8 ⊥ 130
2 pa3 PL 11x3/8 1 0 90 CUTS @11 3909 409
2 pb3 PL 11x3/8 1 0 ⊥ 409
1 pc3 PL 10x3/8 1 3 82x38-3 CUTS 240 ⊥ 412
3 pd3 BR 1 1/2x3/8 0 3 3/4 STC 68C 606

ONE 41CF116 CROSS FRAME
2 av L 3x2 1/2x5/16 9 0 1/4 3905 132
1 aw L 3 1/2x3x3/8 9 9 3943 130
1 ax L 3 1/2x3x3/8 9 11 1/16 ⊥ 130
2 pa3 PL 11x3/8 1 0 90 CUTS @11 3909 409
2 pb3 PL 11x3/8 1 0 ⊥ 409
1 pc3 PL 10x3/8 1 3 82x38-3 CUTS 240 ⊥ 412
3 pd3 BR 1 1/2x3/8 0 3 3/4 STC 68C 606

ONE 41CF117 CROSS FRAME
2 av L 3x2 1/2x5/16 9 0 1/4 3905 132
1 ay L 3 1/2x3x3/8 9 9 1/8 3943 130
1 aab L 3 1/2x3x3/8 9 10 15/16 ⊥ 130
2 pa3 PL 11x3/8 1 0 90 CUTS @11 3909 409
2 pb3 PL 11x3/8 1 0 ⊥ 409
1 pc3 PL 10x3/8 1 3 82x38-3 CUTS 240 ⊥ 412
3 pd3 BR 1 1/2x3/8 0 3 3/4 STC 68C 606

ONE 41CF118 CROSS FRAME
2 ak L 3x2 1/2x5/16 9 0 9/16 3905 132
1 as L 3 1/2x3x3/8 9 8 15/16 3943 130
1 aac L 3 1/2x3x3/8 9 11 5/8 ⊥ 130
2 pa3 PL 11x3/8 1 0 90 CUTS @11 3909 409
2 pb3 PL 11x3/8 1 0 ⊥ 409
1 pc3 PL 10x3/8 1 3 82x38-3 CUTS 240 ⊥ 412
3 pd3 BR 1 1/2x3/8 0 3 3/4 STC 68C 606

SHEET TOTAL

50

FOR GENERAL NOTES SEE DWG GN1
MATL ASTM A36

APPROVED FOR SHOP
CHIEF DRAFTSMAN | CHIEF ENGINEER
REVISION NOTES

CROSS FRAME DETAILS I64
BRIDGE OVER NORTHWESTERN PKWY & 22ND ST.
DEPT. OF HIGHWAYS, COMMONWEALTH OF KENTUCKY
JEFFERSON CTY. FAP I64-2(34), SPSS-279-111
CONTRACTOR: MATTINGLY BRIDGE CO.

NASHVILLE BRIDGE COMPANY
NASHVILLE, TENN.
BESSEMER PLANT

RIVETS ONE | HOLES 13/16" | FIELD CONN 3/4"A307 | SHOP PAINT SEE GN1 | FIELD
DRAWN BY FK DATE 10-29-69 | IN CHARGE GATP (FT-SSB) | CHECKED BY VM DATE 11/22/69 | DATE PRINTED

BILL OF MATERIAL NO 41A & 41B | CONT. C6736 | S.O. B-5727 | DRAWING NO 41

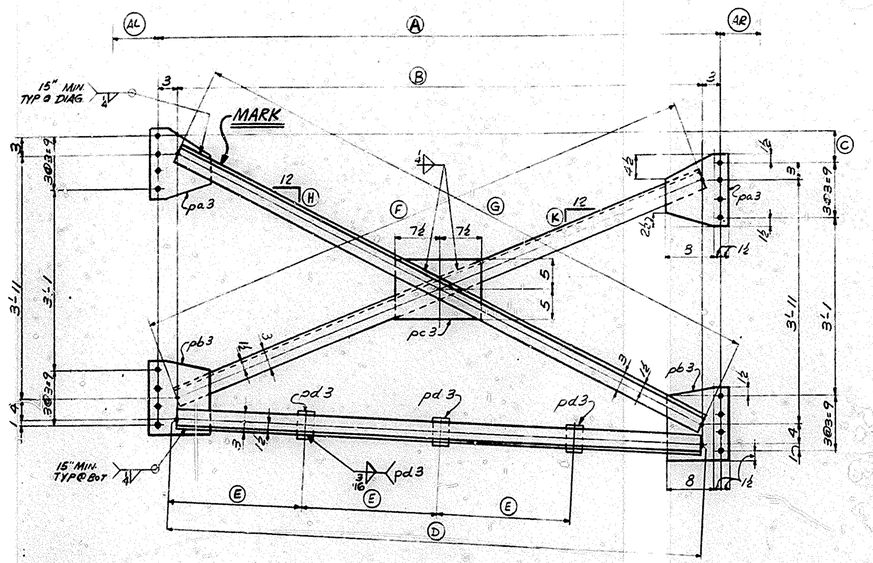

CROSS FRAMES MK 42CF119 & 42CF120
(SEE TABLE BELOW FOR DIM.)

MARK	REQ'D	Ⓐ	Ⓑ	Ⓒ	Ⓓ	Ⓔ	Ⓕ	Ⓖ	Ⓗ	Ⓚ	Ⓐℓ	Ⓐℝ
42CF119	ONE	9'-6 9/16"	9'-0 9/16"	3 1/8"	9'-0 9/16" (aa)	2'-3	9'-9 (ab)	9'-11 1/2 (ac)	5 9/16"	4 7/8"	2 3/4"	2 3/4"
42CF120	ONE	9'-6 9/16"	9'-0 9/16"	2 15/16"	9'-0 9/16" (aa)	2'-3	9'-9 1/8 (ad)	9'-11 7/16 (af)	5 1/2"	4 7/8"	2 3/4"	2 3/4"

NASHVILLE BRIDGE COMPANY

SHOP ORDER NO. B-5727
WORK ORDER NO.
CONTRACT NO. C6736
ITEM

COMMONWEALTH OF KENTUCKY, DEPT. OF HIGHWAYS, BRIDGE
OVER NORTHWESTERN PKWY & 22ND ST., JEFFERSON COUNTY

FABRICATION BESSEMER PLANT

BILL NO. 42
DRAWING NO. 42

WEIGHTS BY | CHECKED BY

SHIP.	SHIPPING MARK	ITEM NO.	ASSEMBLY MARK		SECTION	FINISHED LENGTH FT. IN.	UNFINISHED LENGTH FT. IN.	PCS NO.	ITEM NO.	REMARKS	SPECIF. WEIGHT	ABBC WEIGHT
					MAT'L ASTM A36							
ONE 42CF119					CROSS FRAME							
			2	aa	L 3x2½x5/16	9 0 9/16			3905	132		
			1	ab	L 3½x3x3/8	9 9			3949	130		
			1	ac	L 3½x3x3/8	9 11 1/2				130		
			2	pa3	PL 11x3/8	1 0	2@ CUTS 8@11		3909	409		
			2	pb3	PL 11x3/8	1 0				409		
			1	pc3	PL 10x3/8	1 3	82=38'-9 CUTS 2@9			412		
			3	pd3	BR 1½x3/8	0 3 3/4			3916 686	606		
ONE 42CF120					CROSS FRAME							
			2	aa	L 3x2½x5/16	9 0 9/16			3905	132		
			1	ad	L 3½x3x3/8	9 9 1/8			3949	130		
			1	af	L 3½x3x3/8	9 11 7/16				130		
			2	pa3	PL 11x3/8	1 0	2@ CUTS 8@11		3909	409		
			2	pb3	PL 11x3/8	1 0				409		
			1	pc3	PL 10x3/8	1 3	82=38'-9 CUTS 2@9			412		
			3	pd3	BR 1½x3/8	0 3 3/4			3916 686	606		

SHEET TOTAL

51

FOR GENERAL NOTES SEE DWG GN1
MATL ASTM A36

APPROVED FOR SHOP
CHIEF DRAFTSMAN
CHIEF ENGINEER
REVISION NOTES

CROSS FRAME DETAILS
BRIDGE OVER NORTHWESTERN PKWY & 22ND ST.
DEPT. OF HIGHWAYS, COMMONWEALTH OF KENTUCKY
JEFFERSON CO.: FED. 164-2(041), S-555-0-5314
CONTRACTOR: NATIONAL BRIDGE CO.

NASHVILLE BRIDGE COMPANY
NASHVILLE, TENN.
BESSEMER PLANT

RIVETS: HOLE 3/16"
FIELD CHIP: 50 HRS
SHOP PAINT: 1 COAT
FIN.: 1 COAT
DRAWN BY: FK DATE: 6-22-67
CHECKED BY: V.M. DATE: 11/24/67
DATE PRINTED:

BILL OF MATERIAL NO. 42
C.O. C6736
S.O. B-5727
42

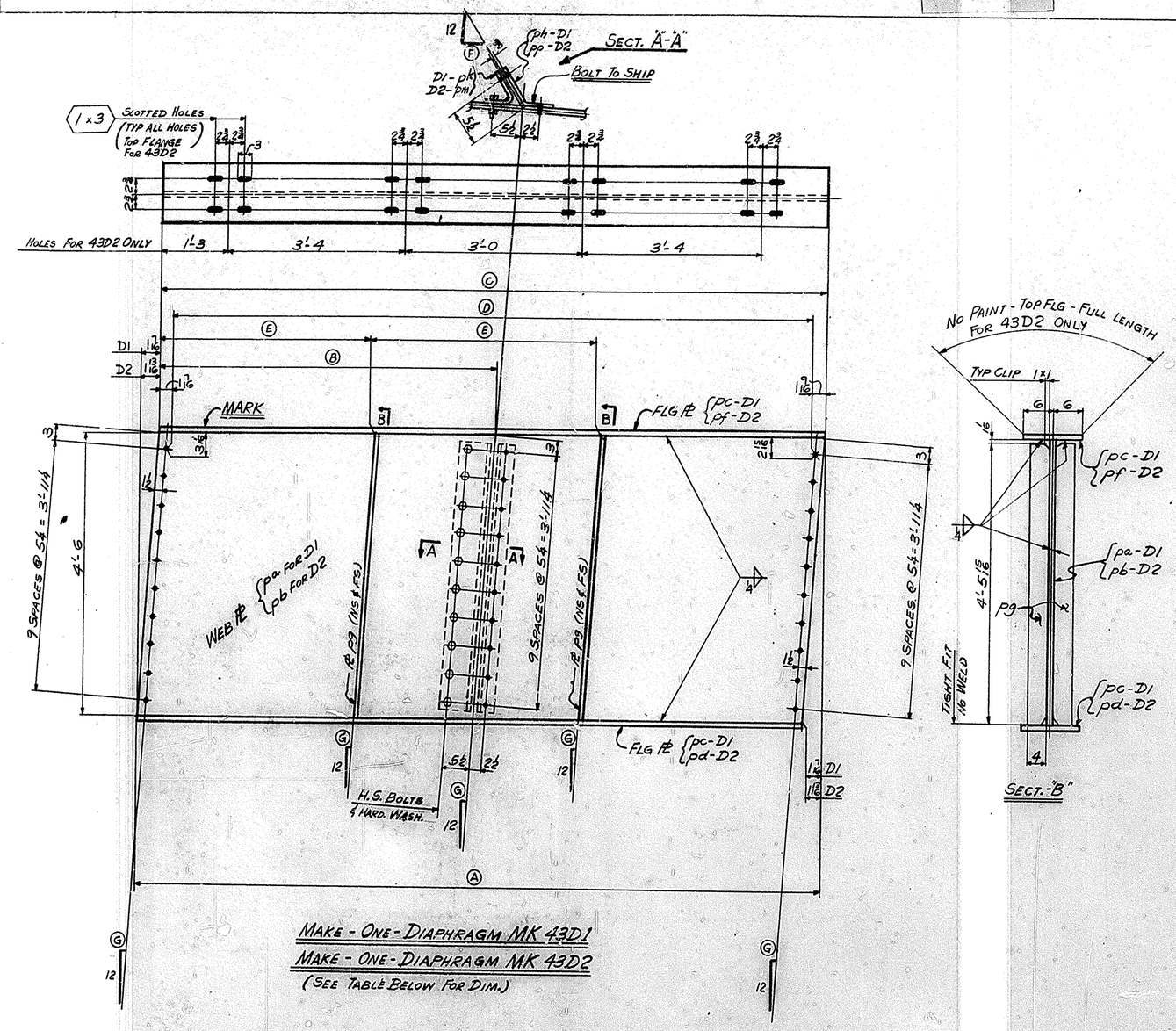

MAKE - ONE - DIAPHRAGM MK 43D1

MAKE - ONE - DIAPHRAGM MK 43D2

(SEE TABLE BELOW FOR DIM.)

MARK	Ⓐ	Ⓑ	Ⓒ	Ⓓ	Ⓔ	Ⓕ	Ⓖ
43D1	12'-6 5/8	6'-2¼	12'-5 3/16	12'-2 3/16	4'-1 3/4	10¼	5/16
43D2	12'-3 15/16	6'-0 13/16	12'-2	11'-11	4'-0 5/8	11 7/16	5/8

NASHVILLE BRIDGE COMPANY

SHOP ORDER NO. B5726 — WORK ORDER NO. — CONTRACT NO. CG736

COMMONWEALTH OF KENTUCKY, DEPT. OF HIGHWAYS, BRIDGE OVER NORTHWESTERN PKWY. & 22ND ST., JEFFERSON COUNTY

FABRICATION BESSEMER PLANT

BILL NO. 43 — DRAWING NO. 43

ITEM — WEIGHTS BY — CHECKED BY

SHIP	SHIPPING MARK	ITEM QUANT.	ASSEMBLY MARK	SHAPE	SECTION	FINISHED LENGTH FT. IN.	ORDERED LENGTH FT. IN.	P.O. NO.	ITEM NO.	REMARKS	SPECIF. WEIGHT	AISC WEIGHT	
					MAT'L ASTM A36 (UN)								
ONE	43D1				DIAPHRAGM								
		ONE	pa	PL	54 x 5/8	12 6 5/8		STK 3372	529				1/7
		2	pc	PL	12 x 1/2	12 5 3/16		STK 3680	405				1/8
		ONE	pk	PL	9½ x 3/8	4 2¼		STK 3740	410				1/10
		ONE	ph	PL	11 x 3/8	4 2¼	90 CUTS @ 11	3909	407				1/11
		4	P9	BR	4 x 1/8	4 5 1/16		3905	605				1/12
		10			7/8" H.S. BOLT	0 2¼		2666	302	HHH HHN (A325)			1/13
		10			HARD. WASH. FOR 7/8" BOLT				203	(A325)			1/14
ONE	43D2				DIAPHRAGM								
		ONE	pb	PL	54 x 5/8	12 3 15/16		STK 3372	529				1-7
		ONE	pd	PL	12 x 1/2	12 2		STK 3680	405				1/9
		ONE	pf	PL	12 x 1/2	12 2			405				1/9
		ONE	pm	PL	9½ x 3/8	4 2¼		STK 3740	410				1/10
		ONE	pp	PL	11 x 3/8	4 2¼	90 CUTS @ 11	3909	407				1/11
		4	P9	BR	4 x 1/8	4 5 1/16		3905	605				1/12
		10			7/8" H.S. BOLT	0 2¼		2666	302	HHH HHN (A325)			1/13
		10			HARD. WASH. FOR 7/8" BOLT				203	(A325)			1/14

SHEET TOTAL

NOTES:

FOR GENERAL NOTES SEE DWG. GN1

MAT'L ASTM A36 (UN)

52

DIAPHRAGMS 164

BRIDGE OVER NORTHWESTERN PKWY & 22ND ST.

DEPT. OF HIGHWAYS, COMMONWEALTH OF KENTUCKY

JEFFERSON CTY., FAP 164-2(34)1-SP5C-273-1L

CONTRACTOR: MATTINGLY BRIDGE CO.

NASHVILLE BRIDGE COMPANY
NASHVILLE, TENN.
BESSEMER PLANT

APPROVED FOR SHOP
HMF 7/10/70 CHIEF DRAFTSMAN
HAK 7/16/70 CHIEF ENGINEER
REVISION NOTES
APPL. CHGS 7/10/70

RIVETS HAND — HOLES 3/4 (UN) UNLESS NOTED — FIELD CONN. 3/4" H.S.B. — SHOP PAINT Z.S.B.R. — FIELD J.G.N1
DRAWN BY RK DATE 10-31-69 — CHECKED BY VM DATE 11/24/69

BILL OF MATERIAL NO. 43 — CONT. C-67-26 — S.O.B. B-5726 — 43

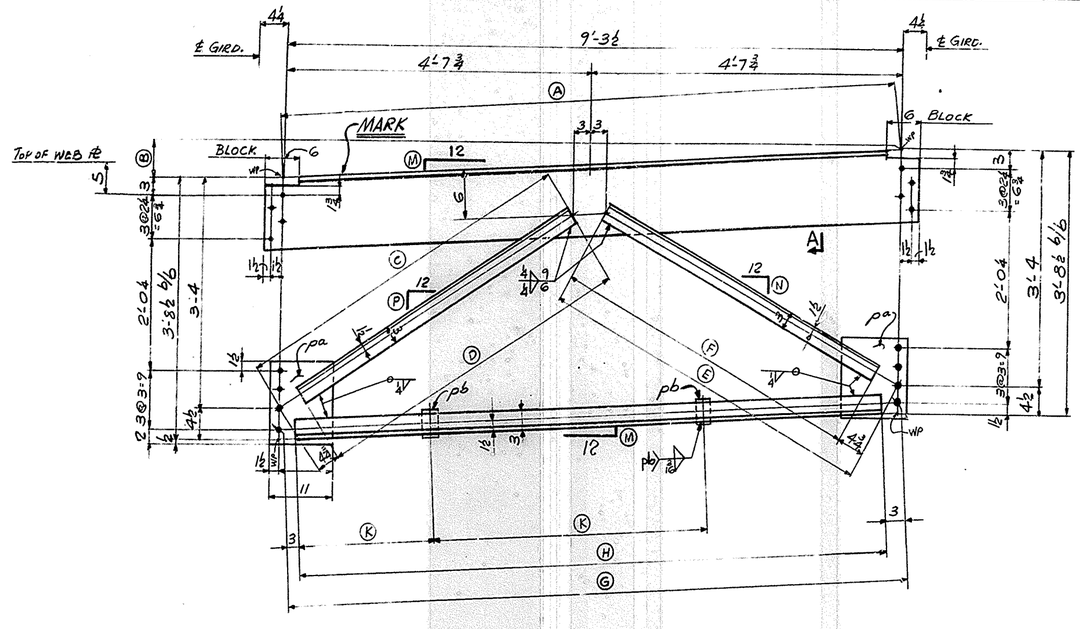

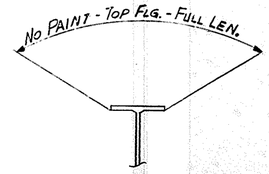

SECTION -A

MAKE - 2 - K-FRAMES MK 44K1 (AS SHOWN)
MAKE - 2 - K-FRAMES MK 44K2 (OPP HAND TO K1)
MAKE - 2 - K-FRAMES MK 44K3 (AS SHOWN)
(SEE TABLE FOR DIM.)

MARK	Ⓐ	Ⓑ	Ⓒ	Ⓓ	Ⓔ	Ⓕ	Ⓖ	Ⓗ	Ⓚ	Ⓜ	Ⓝ	Ⓟ
44K1	9'-3 1/16 (aa)	4 5/16	5'-3 3/8	4'-11 1/8 (ab)	5'-1 11/16	4'-8 15/16 (ac)	9'-3 7/16	8'-9 9/16 (ad)	2'-11	7/16	7¼	8 3/16
44K3	9'-3 5/8 (af)	5 13/16	5'-4¼	4'-11 1/2 (ag)	5'-1 5/16	4'-8 9/16 (ah)	9'-3 5/8	8'-9 5/8 (ak)	2'-11	5/8	7 1/8	8 3/8

NASHVILLE BRIDGE COMPANY

SHOP ORDER NO. B5726
WORK ORDER NO.
CONTRACT NO. C-6736

COMMONWEALTH OF KENTUCKY, DEPT. OF HIGHWAYS, BRIDGE OVER NORTHWESTERN PKWY & 22ND ST. JEFFERSON COUNTY

BILL NO. 44
DRAWING NO. 44

FABRICATION BESSEMER PLANT

ITEM | WEIGHTS BY | CHECKED BY

SHIP	SHIPPING MARK	ITEM QUANT.	ASSEMBLY MARK	SHAPE	SECTION	FINISHED LENGTH FT.	FINISHED LENGTH IN.	ORDERED LENGTH FT.	ORDERED LENGTH IN.	P. O. NO.	ITEM NO.	REMARKS	SPECIF. WEIGHT	AISC WEIGHT
					ALL MAT'L ASTM A36									
2	44K1				K-FRAME							AS SHOWN		
		2	aa	ST	12WF38	9	3 9/16	28'-1½ CUTS 3		3904	101			
		2	af	L	3½x3x3/8	4	11/8			3943	130			
		2	ac	L	3½x3x3/8	4	8 15/16			3943	130			
		4	ad	L	3x2½x5/16	8	9 9/16			3275 3613	131			
		4	pa	PL	11x3/8	1	0½	90 CUTS 2@11		3909	407			
		4	pb	BR	1½x3/8	0	3¾			3276 6&6	606			
2	44K2				K-FRAME							OPP HAND TO K1		
		2	aa	ST	12WF38	9	3 9/16	28'-1½ CUTS 3		3904	101			
		2	ab	L	3½x3x3/8	4	11/8			3943	130			
		2	ac	L	3½x3x3/8	4	8 15/16			3943	130			
		4	ad	L	3x2½x5/16	8	9 9/16			3275 3613	131			
		4	pa	PL	11x3/8	1	0½	90 CUTS 2@11		3909	407			
		4	pb	BR	1½x3/8	0	3¾			3276 6&6	606			
2	44K3				K-FRAME							AS SHOWN		
		2	af	ST	12WF38	9	3 9/16	28'-1½ CUTS 3		3904	101			
		2	ag	L	3½x3x3/8	4	11/8			3943	130			
		2	ah	L	3½x3x3/8	4	8 15/16			3943	130			
		4	ak	L	3x2½x5/16	8	9 9/16			3275 3613	131			
		4	pa	PL	11x3/8	1	0½	90 CUTS 2@11		3909	407			
		4	pb	BR	1½x3/8	0	3¾			3276 6&6	606			

SHEET TOTAL

NOTES:
ALL MAT'L ASTM A36
FOR GENERAL NOTES SEE GN1

53

DIAPHRAGMS RAMP
BRIDGE OVER NORTHWESTERN PKWY & 22ND ST.
DEPT. OF HIGHWAYS, COMMONWEALTH OF KENTUCKY
JEFFERSON CTY. FAP 164-2(341) SP56-279-11L
CONTRACTOR: MATTINGLY BRIDGE CO.

NASHVILLE BRIDGE COMPANY
NASHVILLE, TENN.
BESSEMER PLANT

APPROVED FOR SHOP
CHIEF DRAFTSMAN
CHIEF ENGINEER
REVISION NOTES

RIVETS NONE
HOLES 13/16" OR NOTED
FIELD CONN. 78 HSB
SHOP PAINT } SEE
FIELD " } GN1

DRAWN BY FK DATE 11-3-69
IN CHARGE - GATTI (78-598)
CHECKED BY DATE
DATE PRINTED

BILLS MATERIAL NO. 44
CONT. C-6736
S.O. B-5726
DRAWING NO. 44

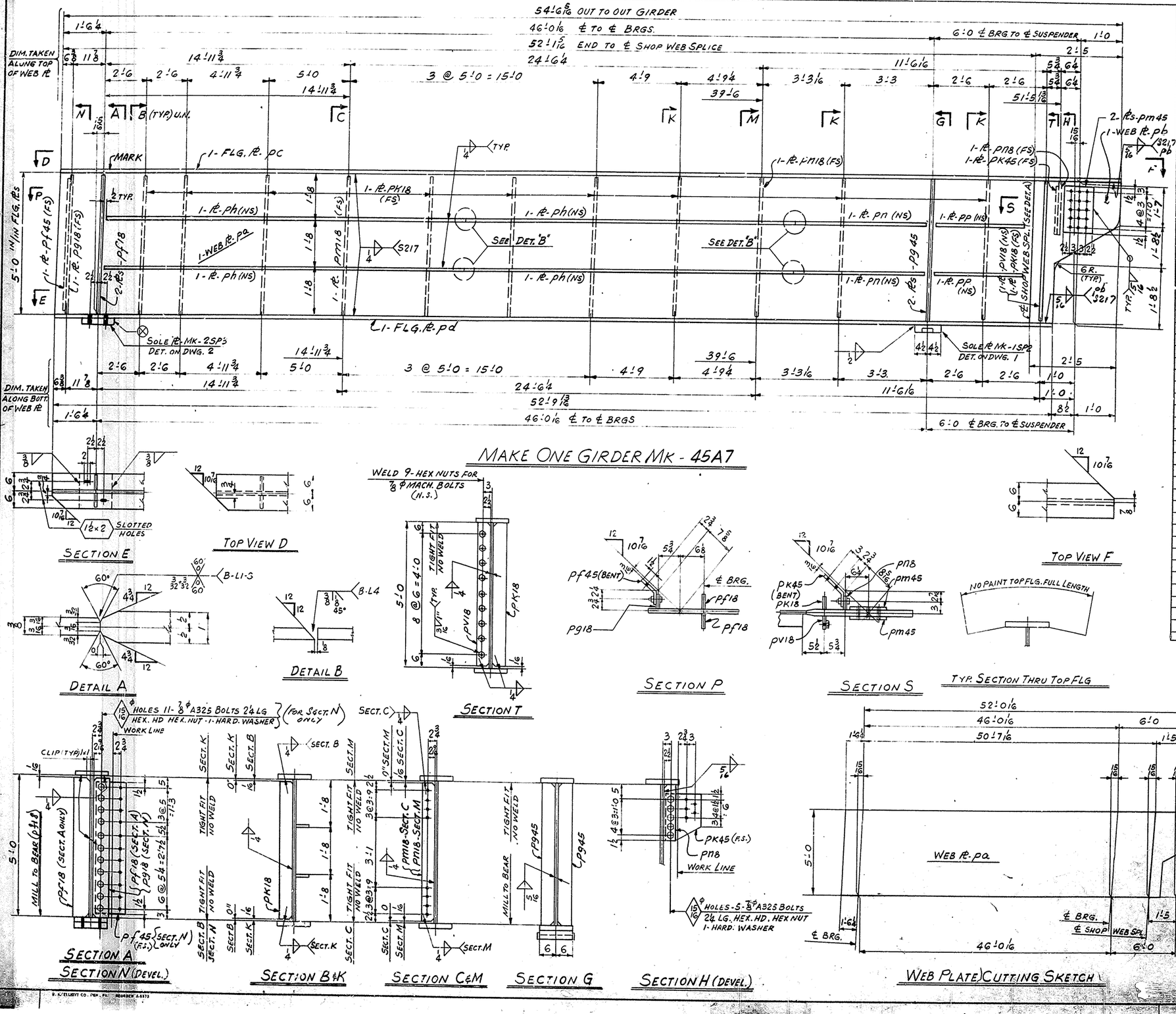

MAKE ONE GIRDER MK - 45A7

MATERIAL ASTM-A36 (U.N.)
FOR GENERAL NOTES SEE DWG. GN1
⊗ INDICATES THICKER SIDE OF SOLE PL

54

NASHVILLE BRIDGE COMPANY

SHOP ORDER NO. B5725
WORK ORDER NO.
CONTRACT NO. CG736

COMMONWEALTH OF KENTUCKY DEPT. OF HIGHWAYS, BRIDGE
OVER NORTH WESTERN PARKWAY & 22ND ST. JEFFERSON COUNTY.

BILL NO. 45
DRAWING NO. 45

FABRICATION BESSEMER PLANT

WEIGHTS BY ____ CHECKED BY ____

ITEM SHIP	SHIPPING MARK	ITEM COUNT	ASSEMBL. MARK		SECTION	FINISHED LENGTH FT.	FINISHED LENGTH IN.	ORDERED LENGTH FT. IN.	P.O. NO.	ITEM NO.	REMARKS	SPECIF. WEIGHT	ATSC WEIGHT
					MATERIAL ASTM-A36 (U.N.)								
ONE	45A7				GIRDER								
		1	pa	PL	60 × 3/8	52	2 1/4	60 × 52'-6	3905	523	PL 61 × 3'-6 MACH CUT 1 EA. Pb & pd70		
		1	pb	PL	29 13/16 × 1	5	0		3910	304			
		1	pc	PL	12 × 3/8	54	6 1/4	55 7/16 CUT 55 GR.	3910	320			
		1	pd	PL	12 × 3/8	52	9 1/16	53 1/4 CUT 53 7/8	3910	317			
		1	pf45	PL	7 3/4 × 3/8	4	7		STK 3572	577	(BENT)		
		1	pg18	PL	4 × 3/8	4	11 15/16		3905	605	(FIE)		
		2	pf18	PL	5 1/2 × 1/2	4	11 15/16		STK 3620	606	(MIE)		
		10	pk18	PL	4 × 3/8	4	11 15/16		3905	605	(FIE)		
		1	pm18	PL	4 × 3/8	4	11 15/16			605			
		1	pn18	PL	4 × 3/8	4	11 15/16			605			
		1	pv18	PL	4 × 3/8	4	11 15/16		3905	605	(FIE)		
		2	pg45	PL	5 1/2 × 1 1/16	5	0		STK 1864	298	(MIE)(FIE)		
		1	pm18	PL	4 × 3/8	1	6 1/2		3905	605			
		1	pk45	PL	11 1/8 × 3/8	1	3		STK 3572	438	(BENT)		
		2	pm45	PL	11 × 5/8	1	3		STK 3776	372			
		4	ph	PL	4 × 3/8	20	0		3905	605			
		2	pn	PL	4 × 3/8	5	9 1/2		3905	605			
		2	pp	PL	4 × 3/8	4	5 3/8		3905	605			
		16			7/8 φ BOLTS	0	2 1/4		REQ 7850 Gr. 1	702	(A325) HEX. HD HEX. NUT		
		16			HARD. WASHER FOR 7/8 φ BOLTS				REQ 7850 Gr. 1	703	(A325)		
		9			HEX. NUT					STK	(A307)		
		1	2SP3		SOLE PL						DET. ON SHT. 2		
		1	1SP2		SOLE PL						DET. ON SHT. 1		
											SHEET TOTAL		

GIRDER DETAILS SPAN 7W
BRIDGE OVER NORTHWESTERN PARKWAY & 22ND ST.
DEPARTMENT OF HIGHWAYS COMMONWEALTH OF KENTUCKY
JEFFERSON COUNTY F.A.P. I64-2(34)1; SP56-273-11L
CONTRACTOR MATTINGLY BRIDGE CO.

NASHVILLE BRIDGE COMPANY
NASHVILLE, TENN.
BESSEMER PLANT

APPROVED FOR SHOP: HMF 7/9/70 CHIEF DRAFTSMAN; HRC 7/15/70 CHIEF ENGINEER
REVISION NOTES: APPL. CHGS. 7/10/70

DRAWN BY G.D. DATE 11-9-67
IN CHARGE: G. ATTI
CHECKED BY V.M. DATE 12/17/
DATE PRINTED

HOLES 15/16 φ OR NOTED
FIELD CONN. 7/8 φ H.S.B.
SHOP PAINT SEE DWG. GN1
FIELD

BILLS MATERIAL NO. 45
CONT. CG736
S.O. B5725
45

BRIDGE

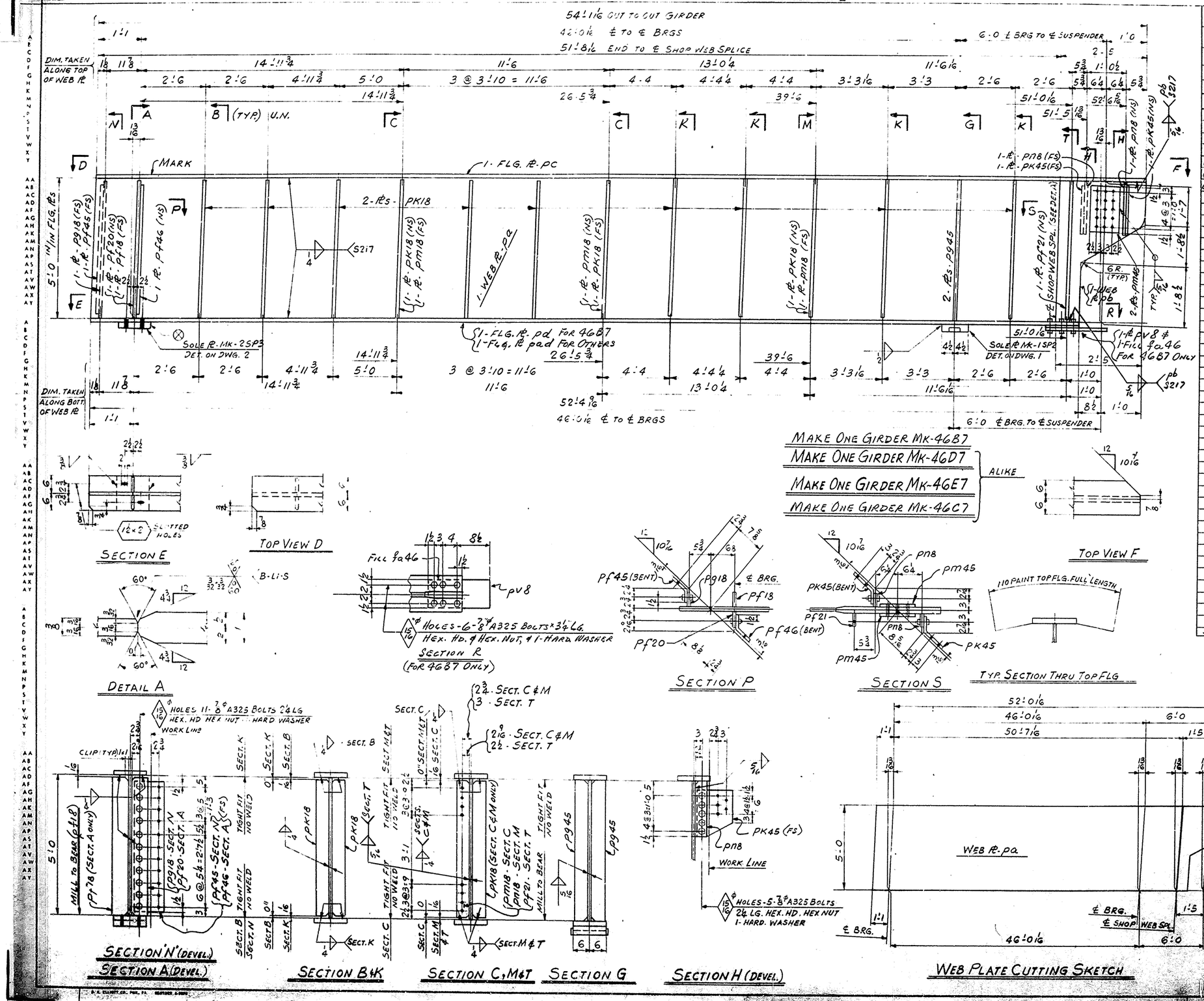

NASHVILLE BRIDGE COMPANY

SHOP ORDER NO. 85725
WORK ORDER NO.
CONTRACT NO. CG736

COMMONWEALTH OF KENTUCKY DEPT OF HIGHWAYS BRIDGE OVER NORTH WESTERN PARKWAY & 22ND ST JEFFERSON COUNTY

BILL NO 46
DRAWING NO 46

FABRICATION BESSEMER PLANT

ITEM									
			MATERIAL ASTM-A36 (U.N.)						
ONE 46B7			GIRDER						
ONE 46D7			GIRDER						ALIKE
ONE 46E7			GIRDER						
ONE 46C7			GIRDER						
	4	pa	PL 60 × 3/8	51 8 15/16	60 × 52'-0	3908 524	PL GL × 3'-6 MATCH CUT LEA pb & pd		13/3
	4	pb	PL 29 13/16 × 1	5 0		3910 300			13/4
	4	pc	PL 12 × 5/8	54 1 1/16	85 × 54'-3 CUTS. 7	3910 317			13/7
	1	pd	PL 12 × 5/8	52 4 9/16	85 × 52'-6 CUTS. 7 & 12	3910 317	(46B7)		13/9
	4	pf25	PL 7 7/8 × 3/8	4 7		STK 3372 527	(BENT)		13/15
	4	pf46	PL 8 3/8 × 3/8	4 7		STK 3372 527	(BENT)		13/15
	4	pf18	PL 5 1/2 × 1/2	4 11 5/16		STK 3680 406	(MIE)		13/11
	4	pf20	PL 5 1/2 × 1/2	4 11 5/16		STK 3680 406	(MIE)		13/11
	4	pg18	PL 4 × 3/8	4 11 5/16		3905 605	(FIE)		13/14
	84	pk18	PL 4 × 3/8	4 11 5/16			(CIE)		13/14
	8	pm18	PL 4 × 3/8	4 11 5/16			(FIE)		13/16
	4	pn18	PL 4 × 3/8	4 11 5/16			(FIE)		13/16
	4	pf21	PL 4 × 3/8	4 11 5/16		3905 605	(FIE)		13/14
	8	pg45	PL 5 1/2 × 1 5/16	5 0		STK 1868 928	(MIE) (FIE)		13/12
	8	pn8	PL 4 × 3/8	1 6 1/2		3905 605			13/17
	8	pk45	PL 11 1/8 × 3/8	1 3		STK 3372 438	(BENT)		13/16
	8	pm45	PL 11 × 5/8	1 3		STK 3724 322			13/9
	1	pa46	PL 7 × 1/2	0 10		3910 401	(46B7)		13/20
	1	pv8	PL 7 × 3/4	1 5		STK 2675 316	(46B7)		13/12
	4	2SP3	SOLE PL				DET. ON DWG. 2		
	4	1SP2	SOLE PL				DET. ON DWG. 1		
	6		7/8 ϕ BOLTS	0 3 1/4		24661 206	(A325)	HEX. HD. HEX. NUT	
	128		7/8 ϕ BOLTS	0 2 1/4			202 (A325)	HEX. HD. HEX. NUT	
	134		HARD WASHER FOR 7/8 BOLTS				203 (A325)		
	3	pad	PL 12 × 5/8	52 4 9/16	85 × 52'-7 & 12	3910 347	(46D7, E7, C7)		13/9
							SHEET TOTAL		

MATERIAL ASTM-A36 (U.N.)
FOR GENERAL NOTES SEE DWG. GN1
⊗ INDICATES THICKER SIDE OF SOLE PL

55

GIRDER DETAILS SPAN 7W
BRIDGE OVER NORTHWESTERN PARKWAY & 22ND ST.
DEPARTMENT OF HIGHWAYS COMMONWEALTH OF KENTUCKY
JEFFERSON COUNTY F.A.P. IG4-2(34)1; SP.SG-273 1IL
CONTRACTOR MATTINGLY BRIDGE CO.

NASHVILLE BRIDGE COMPANY
NASHVILLE, TENN.
BESSEMER PLANT

APPROVED FOR SHOP
CHIEF DRAFTSMAN
CHIEF ENGINEER
REVISION NOTES
APPR. CHIEF 2/19/70

Hole dia. 15/16 ϕ on notes
Field Conn. 7/8 ϕ H.S.B.
Shop Paint SEE DWG GN1
Field

DRAWN BY G.D. DATE 11-4-69
IN CHARGE: GATTI
CHECKED BY DATE 12/12/69
DATE PRINTED

BILL MATERIAL NO. 46
CONT. CG736
S.O. B5725
DRAWING NO. 46

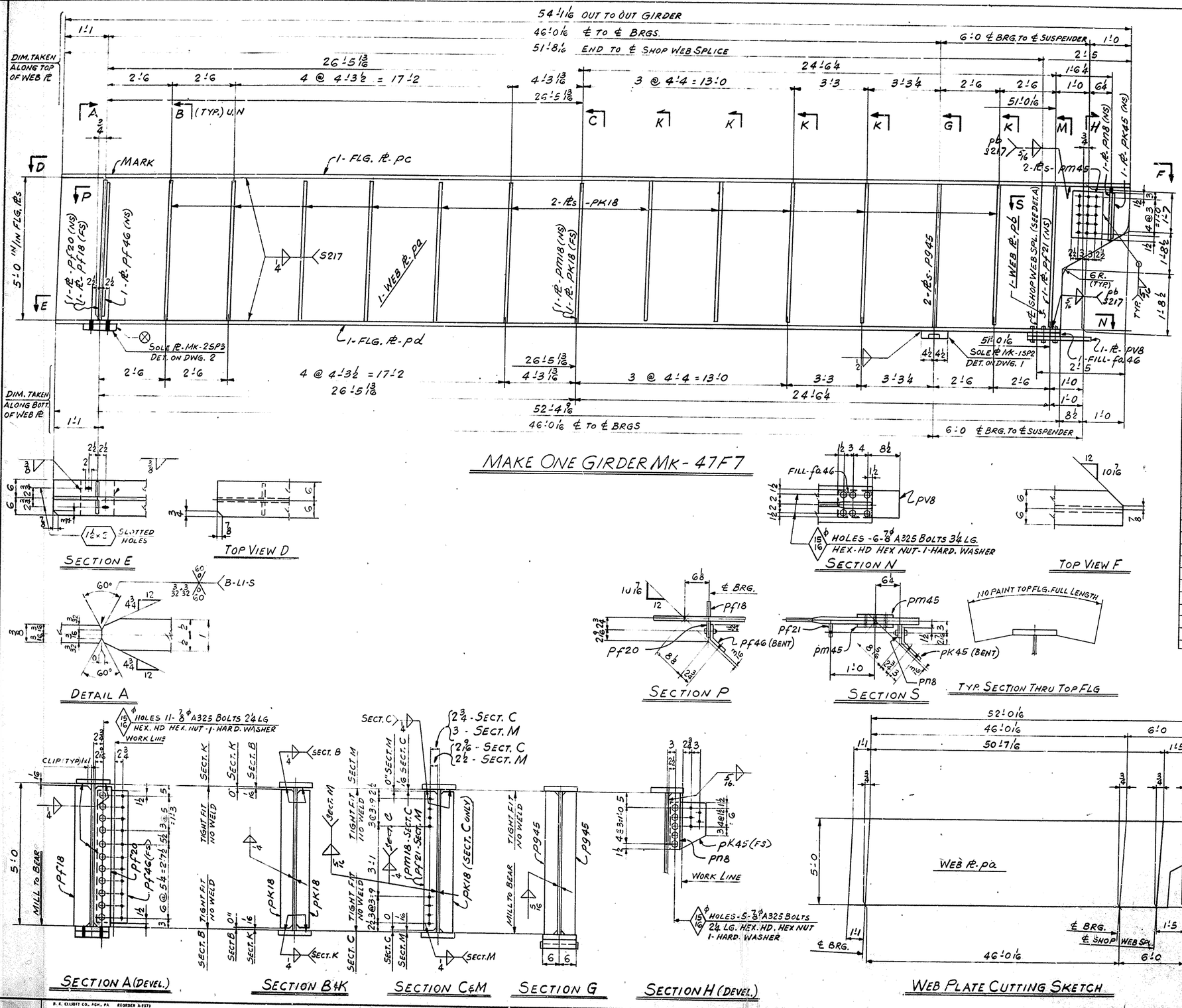

NASHVILLE BRIDGE COMPANY

COMMONWEALTH OF KENTUCKY DEPT. OF HIGHWAYS, BRIDGE OVER NORTH WESTERN PARKWAY & 22ND ST. JEFFERSON COUNTY.

FABRICATION BESSEMER PLANT

SHOP ORDER NO. B5725 | WORK ORDER NO. | CONTRACT NO. CG736 | BILL NO. 47 | DRAWING NO. 47

WEIGHTS BY | CHECKED BY

ITEM	SHIPPING MARK	ITEM COUNT	ASSEMBLY MARKS	SECTION	FINISHED LENGTH FT	IN	ORDERED LENGTH FT	IN	P.O. NO.	ITEM NO.	REMARKS	SPECIF. WEIGHT	ASSC. WEIGHT
				MATERIAL ASTM-A36 (U.N.)									
ONE	47F7			GIRDER									
		1	pa	PL 60 × 3/8	51	8 3/8	60	0	52'-0	3908	534	PL 61 3/16 MATCH CUT 1 EA pb & pd 65	13/4
		1	pb	PL 29 3/4 × 1	5	0				3910	306		13/4
		1	pc	PL 12 × 5/8	54	11/16	88 1/2 CUTS 7	5	54'-8	3910	317		13/7
		1	pd	PL 12 × 5/8	52	4 7/8	85 1/2 CUTS 7	0	52'-7	3910	317		13/9
		1	pf20	PL 5 1/2 × 1/2	4	11 15/16				3776 3680	406	(MIE)	13/11
		1	pf18	PL 5 1/2 × 1/2	4	11 15/16				3776 3680	406	(MIE)	13/14
		1	pf46	PL 8 1/2 × 3/8	4	7				3776 3772	527	(BENT)	13/15
		23	pk18	PL 4 × 3/8	4	11 15/16				3905	605	(FIE)	13/14
		1	pm18	PL 4 × 3/8	4	11 15/16				3905	605	(FIE)	13/14
		1	pf21	PL 4 × 3/8	4	11 15/16				3905	605	(FIE)	13/14
		1	pm8	PL 4 × 3/8	1	6 1/2				3905	605		13/17
		1	pk45	PL 11 1/2 × 3/8	1	3				3776 3772	432	(BENT)	13/16
		1	pv8	PL 7 × 3/4	1	5				3776 2674	346		13/18
		2	pm45	PL 11 × 5/8	1	3				3776 3772	322		13/19
		1	fa46	PL 7 × 1/2	0	10				3910	401		13/20
		2	pg45	PL 5 1/2 × 1 9/16	5	0				3776 1864	228	(MIE) (FIE)	13/2
		1	2SP3	SOLE PL								DET. ON DWG. 2	
		1	1SP2	SOLE PL								DET. ON DWG. 1	
		16		7/8 ϕ BOLTS	0	2 1/4				2461	202	(A325) HEX HD HEX NUT	
		6		7/8 ϕ BOLTS	0	3 1/4					206	(A325) HEX HD HEX NUT	
		22		HARD. WASHERS FOR 7/8 ϕ BOLTS							203	(A325)	

SHEET TOTAL

MATERIAL ASTM-A36 (U.N.)
FOR GENERAL NOTES SEE DWG. GN1
⊗ INDICATES THICKER SIDE OF SOLE PL

56

GIRDER DETAILS SPAN #7W
BRIDGE OVER NORTHWESTERN PARKWAY & 22ND ST.
DEPARTMENT OF HIGHWAYS COMMONWEALTH OF KENTUCKY
JEFFERSON COUNTY F.A.P. I64-2(34)1; SP56-273 1L
CONTRACTOR MATTINGLY BRIDGE CO.

NASHVILLE BRIDGE COMPANY
NASHVILLE, TENN.
BESSEMER PLANT

APPROVED FOR SHOP — CHIEF DRAFTSMAN — CHIEF ENGINEER
REVISION NOTED: APPL. CHGS. 2/10/70
HOLES 15/16 ϕ OR NOTED
FIELD CONN. 7/8 ϕ H.S.B.
SHOP PAINT SEE DWG GN1
FIELD
DRAWN BY G.D. DATE 11-4-69
INCHARGE: GATTI TENSON
CHECKED BY DM DATE 12/17/69
DATE PRINTED

BILL MATERIAL NO. 47 | CONT. CG736 | S.O. B5725 | DRAWING NO. 47

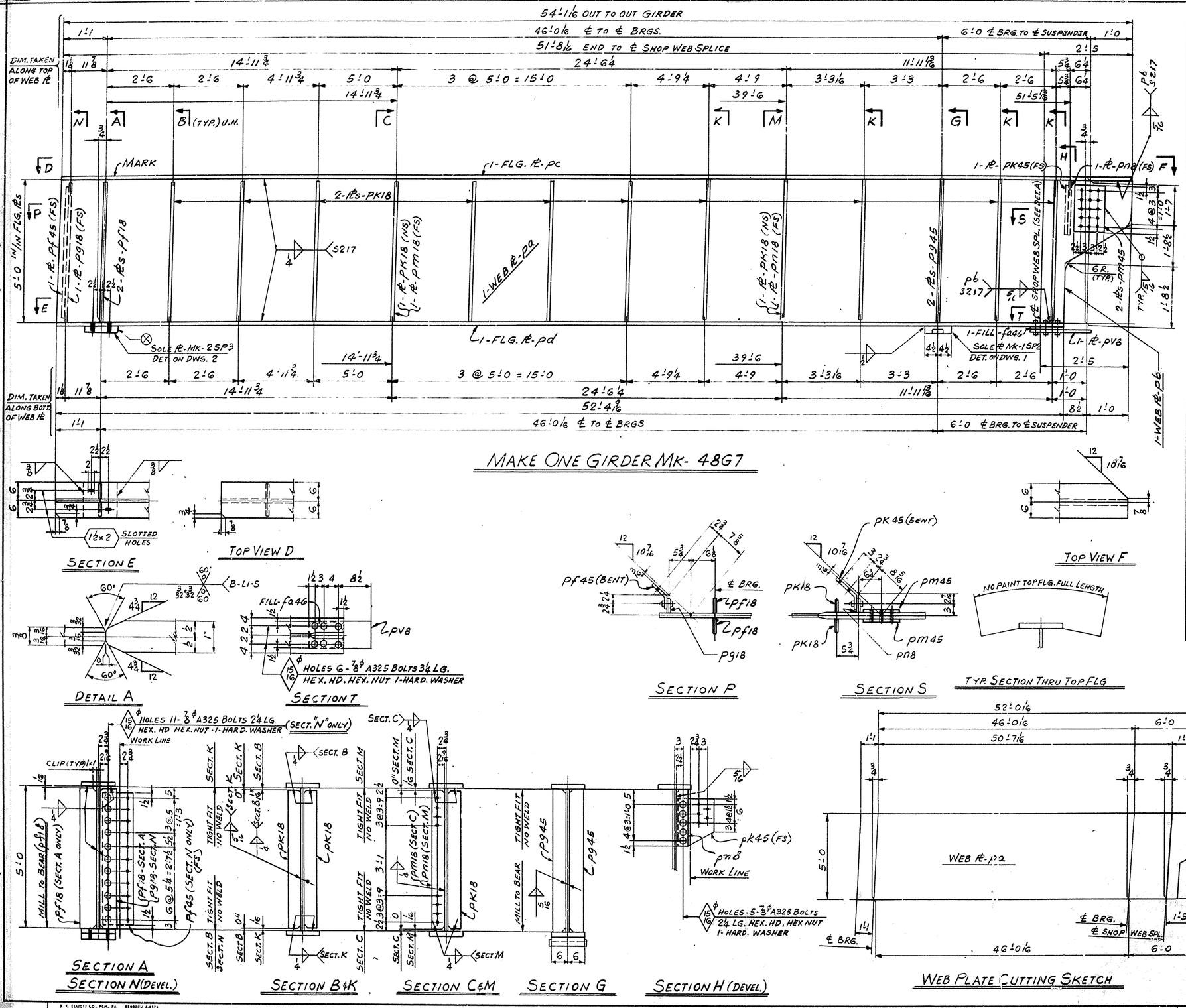

MAKE ONE GIRDER MK- 48G7

SECTION E

TOP VIEW D

TOP VIEW F

DETAIL A

SECTION T

SECTION P

SECTION S

TYP. SECTION THRU TOP FLG

SECTION A

SECTION N (DEVEL.)

SECTION B & K

SECTION C & M

SECTION G

SECTION H (DEVEL.)

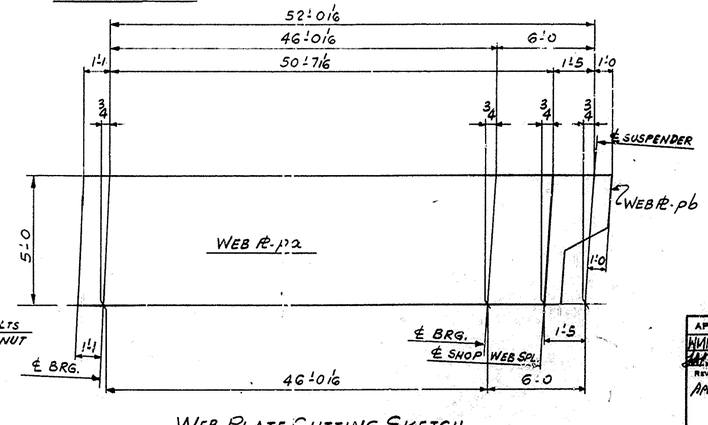

WEB PLATE CUTTING SKETCH

MATERIAL ASTM-A36 (U.N.)
FOR GENERAL NOTES SEE DWG. GN1
⊗ INDICATES THICKER SIDE OF SOLE PL

57

NASHVILLE BRIDGE COMPANY

SHOP ORDER NO. B5725
WORK ORDER NO.
CONTRACT NO. C6736

COMMONWEALTH OF KENTUCKY DEPT. OF HIGHWAYS, BRIDGE OVER NORTH WESTERN PARKWAY & 22ND ST. JEFFERSON COUNTY.

BILL NO. 48
DRAWING NO. 48

FABRICATION BESSEMER PLANT

ITEM | WEIGHTS BY | CHECKED BY

SHIP	SHIPPING MARK	PIECES COUNT	ASSEMBLY MARK	REMARKS	SECTION	FINISHED LENGTH FT.	FINISHED LENGTH IN.	ORDERED LENGTH FT.	ORDERED LENGTH IN.	P.O. NO.	ITEM NO.	REMARKS	SPECIF. WEIGHT	A.I.S.C. WEIGHT
					MATERIAL ASTM-A36 (U.N.)									
ONE 48G7					GIRDER									
		1	pa	PL	60 × 3/8	51	8 3/8	60 × 52'-0		3908	526	PL G1 × 3'-6 MATCH CUT (EA. pb & pd 61)		13/3
		1	pb	PL	29 3/4 × 1	5	0			3910	906			13/4
		1	pc	PL	12 × 5/8	54	1/16	85 5/8 × 54 1/8 CUT 17		3910	317			13/7
		1	pd	PL	12 × 5/8	52	4 1/16	88 1/2 × 52 1/16	72 12	3910	317			13/9
		1	pf45	PL	7 7/8 × 3/8	4	7			3772 3372	527	(BENT)		10/15
		1	pg18	PL	4 × 3/8	4	11 15/16			3905	605	(FIE)		13/14
		2	pf18	PL	5 1/2 × 1/2	4	11 15/16			3772 3870	406	(MIE)		13/11
		22	PK18	PL	4 × 3/8	4	11 15/16			3905	605	(FIE)		13/14
		1	pm18	PL	4 × 3/8	4	11 15/16			3905	605	(FIE)		13/14
		1	pn18	PL	4 × 3/8	4	11 15/16			3905	605	(FIE)		13/14
		2	pg45	PL	5 1/2 × 1 5/16	5	0			3772 1868	278	(MIE) (FIE)		13/12
		1	PK45	PL	11 3/8 × 3/8	1	3			3772 3372	439	(BENT)		17/16
		1	pn8	PL	4 × 3/8	1	6 1/2			3905	605			13/17
		2	pm45	PL	11 × 5/8	1	3			3772 3772	322			19/14
		1	pv8	PL	7 × 3/4	1	5			3772 2670	316			13/19
		1	fa46	PL	7 × 1/2	0	10			3910	401			13/20
		1	2SP3		SOLE PL							DET. ON SHT. 2		
		1	1SP2		SOLE PL				1			DET. ON SHT. 1		
		16			7/8 ϕ BOLTS	0	2 1/4			2666	902	(A325) HEX HD HEX NUT		
		6			7/8 ϕ BOLTS	0	3 1/4			2666	906	(A325) HEX HD HEX NUT		
		22			HARD. WASHERS FOR 7/8 ϕ BOLTS					2666	203	(A325)		
												SHEET TOTAL		

GIRDER DETAILS SPAN 7E
BRIDGE OVER NORTHWESTERN PARKWAY & 22ND ST.
DEPARTMENT OF HIGHWAYS COMMONWEALTH OF KENTUCKY
JEFFERSON COUNTY F.A.P. I64-2(34)1; SP 56-273 11L
CONTRACTOR MATTINGLY BRIDGE CO.

NASHVILLE BRIDGE COMPANY
NASHVILLE, TENN.
BESSEMER PLANT

APPROVED FOR SHOP
CHIEF DRAFTSMAN
CHIEF ENGINEER
REVISION NOTES
Appl. Chgs. 3/10/70

Holes 15/16 ϕ or noted
Field Conn. 7/8 ϕ H.S.B.
Shop Paint / Field: SEE DWG GN1

DRAWN BY G.D. DATE 11-5-69
IN CHARGE: GATTI (TENSOR)
CHECKED BY DATE 12/17/69
DATE PRINTED

BILLS MATERIAL NO. 48
CONT. C6736
S.O. B5725
DRAWING NO. 48

BRIDGE

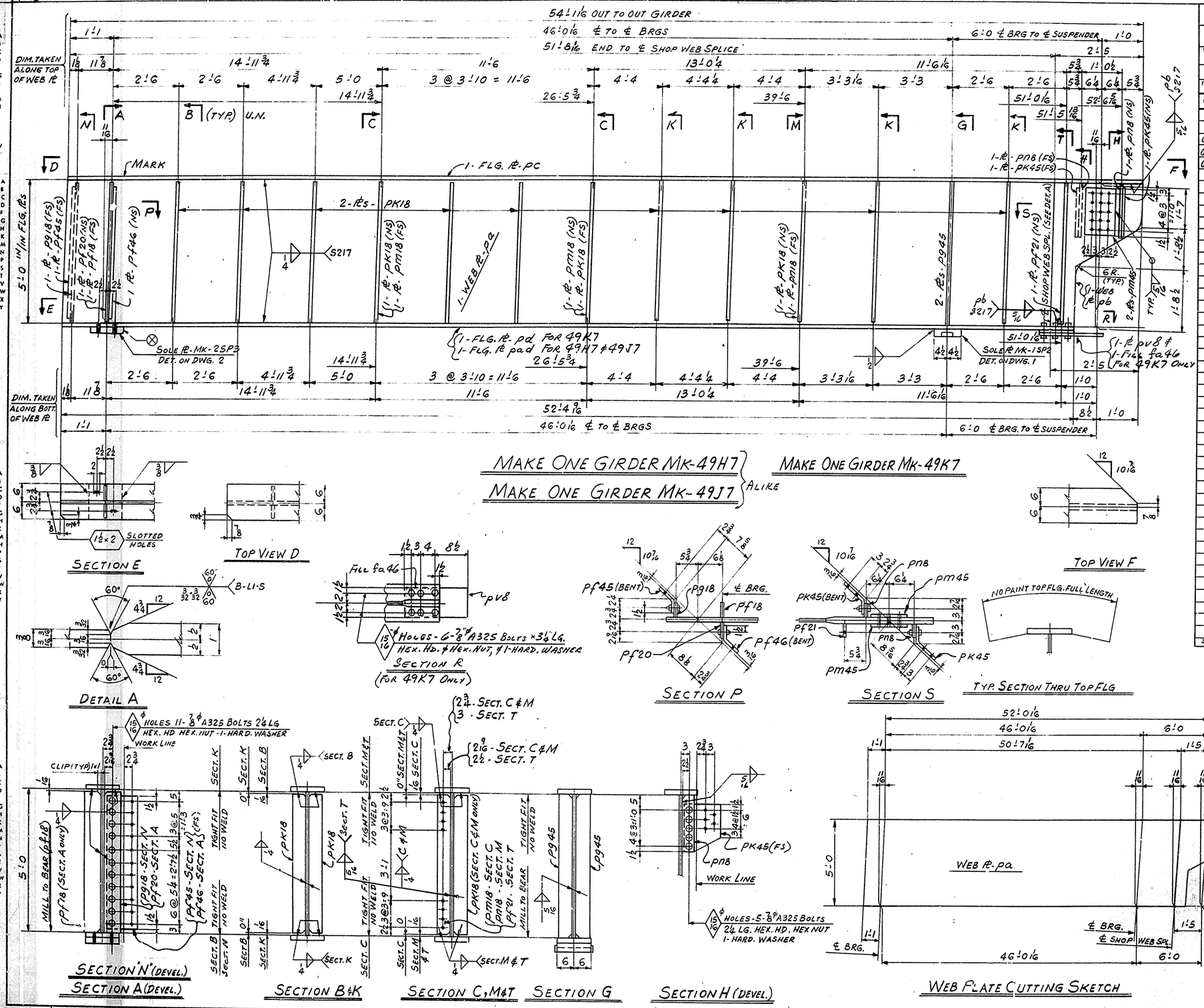

NASHVILLE BRIDGE COMPANY

COMMONWEALTH OF KENTUCKY DEPT. OF HIGHWAYS, BRIDGE OVER NORTH WESTERN PARKWAY & 22ND ST. JEFFERSON COUNTY.

SHOP ORDER NO. B5725 | WORK ORDER NO. | CONTRACT NO. CG736 | BILL NO. 49 | DRAWING NO. 49

FABRICATION BESSEMER PLANT

SHIP	SHIPPING MARK	ITEM COUNT	ASSEMBLY MARK	SHAPE	SECTION	FINISHED LENGTH FT. IN.	ORDERED LENGTH FT. IN.	WEIGHTS BY	P.O. NO.	ITEM NO.	REMARKS	SPECIF. WEIGHT	A.I.S.C. WEIGHT
					MATERIAL ASTM-A36 (U.N.)								
ONE	49H7				GIRDER						ALIKE		
ONE	49J7												
ONE	49K7												
		3	pa	℞	60 × 3/8	51 8 1/16	60×52'-0		3908	524	℞ 61 × 3-6 NATCH CUT (FS) EA. pb & pd 52 LG		13/3
		3	pb	℞	29 11/16 × 1	5 0			3910	306			13/4
		3	pc	℞	12 × 5/8	54 1/16	55 1/16 CUT 7	649	3910	317			13/7
		1	pd	℞	12 × 5/8	52 4 1/16	52 1/16 CUT 3	7012	3910	317	49K7		13/9
		3	pf45	℞	7 7/8 × 3/8	4 7			STK. 3572	527	(BENT)		13/15
		3	pf46	℞	8 1/8 × 3/8	4 7			STK. 3572	527	(BENT)		13/15
		3	pf18	℞	5 1/2 × 1/2	4 11 13/16			STK. 3680	906	(MIE)		13/11
		3	pf20	℞	5 1/2 × 1/2	4 11 13/16			STK. 3680	906	(MIE)		13/11
		3	pg18	℞	4 × 3/8	4 11 13/16			3905	605	(FIE)		13/14
		63	pk18	℞	4 × 3/8	4 11 13/16					(FIE)		13/14
		6	pm18	℞	4 × 3/8	4 11 13/16					(FIE)		13/14
		3	pn18	℞	4 × 3/8	4 11 13/16					(FIE)		13/14
		3	pf21	℞	4 × 3/8	4 11 13/16			3905	605	(FIE)		13/14
		6	pg45	℞	5 1/2 × 1 1/16	5 0			STK. 1864	323	(MIE) (FIE)		13/12
		6	pn8	℞	4 × 3/8	1 6 1/2			3905	605			13/17
		6	pk45	℞	11 1/8 × 3/8	1 3			STK. 3572	438	(BENT)		13/16
		6	pm45	℞	11 × 3/8	1 3			STK. 3574	322			13/19
		1	pd46	℞	7 × 1/2	0 10			3910	401	(49K7)		13/20
		1	pv8	℞	7 × 3/4	1 5			STK. 3678	316	(49K7)		13/18
		3	2SP3		SOLE ℞						DET. ON DWG. 2		
		3	1SP2		SOLE ℞						DET. ON DWG. 1		
		6			7/8" BOLTS	0 3 1/2			4444	204	(A325) HEX. HD. HEX. NUT 1-HARD. WASH.		
		96			7/8" BOLTS	0 2 1/2				202	(A325) HEX. HD. HEX. NUT		
		102			HARD WASHER FOR 7/8" BOLTS					205	(A325)		
		2	pad	℞	12 × 5/8	52 4 1/16	52 1/16 CUT 3	7012	3910	317	49H7 & J7		13/9
											SHEET TOTAL		

MATERIAL ASTM-A36 (U.N.)
FOR GENERAL NOTES SEE DWG. GN1
⊗ INDICATES THICKER SIDE OF SOLE ℞

58

GIRDER DETAILS SPAN 7E
BRIDGE OVER NORTH WESTERN PARKWAY & 22ND ST
DEPARTMENT OF HIGHWAYS COMMONWEALTH OF KENTUCKY
JEFFERSON COUNTY F.A.P. 164-2(34); SP 56-273 1L
CONTRACTOR MATTINGLY BRIDGE CO.

NASHVILLE BRIDGE COMPANY
NASHVILLE, TENN. — BESSEMER PLANT

APPROVED FOR SHOP: WME 7/7/70 Chief Draftsman; 7/8/70 Chief Engineer
REVISION NOTES: Appl. Chgs. 2/10/70
HOLES 15/16 φ — OR NOTED
FIELD CONN. 7/8" φ H.S.B.
SHOP PAINT / FIELD — SEE DWG. GN1
DRAWN BY G.D. DATE 11-4-69
IN CHARGE E. GATTI (FOREMAN)
CHECKED BY M DATE 12/17/69
DATE PRINTED [redacted]

BILLS MATERIAL NO.	CONT.	DRAWING NO.
49	C 6736	49
	S.O. B5725	

BRIDGE

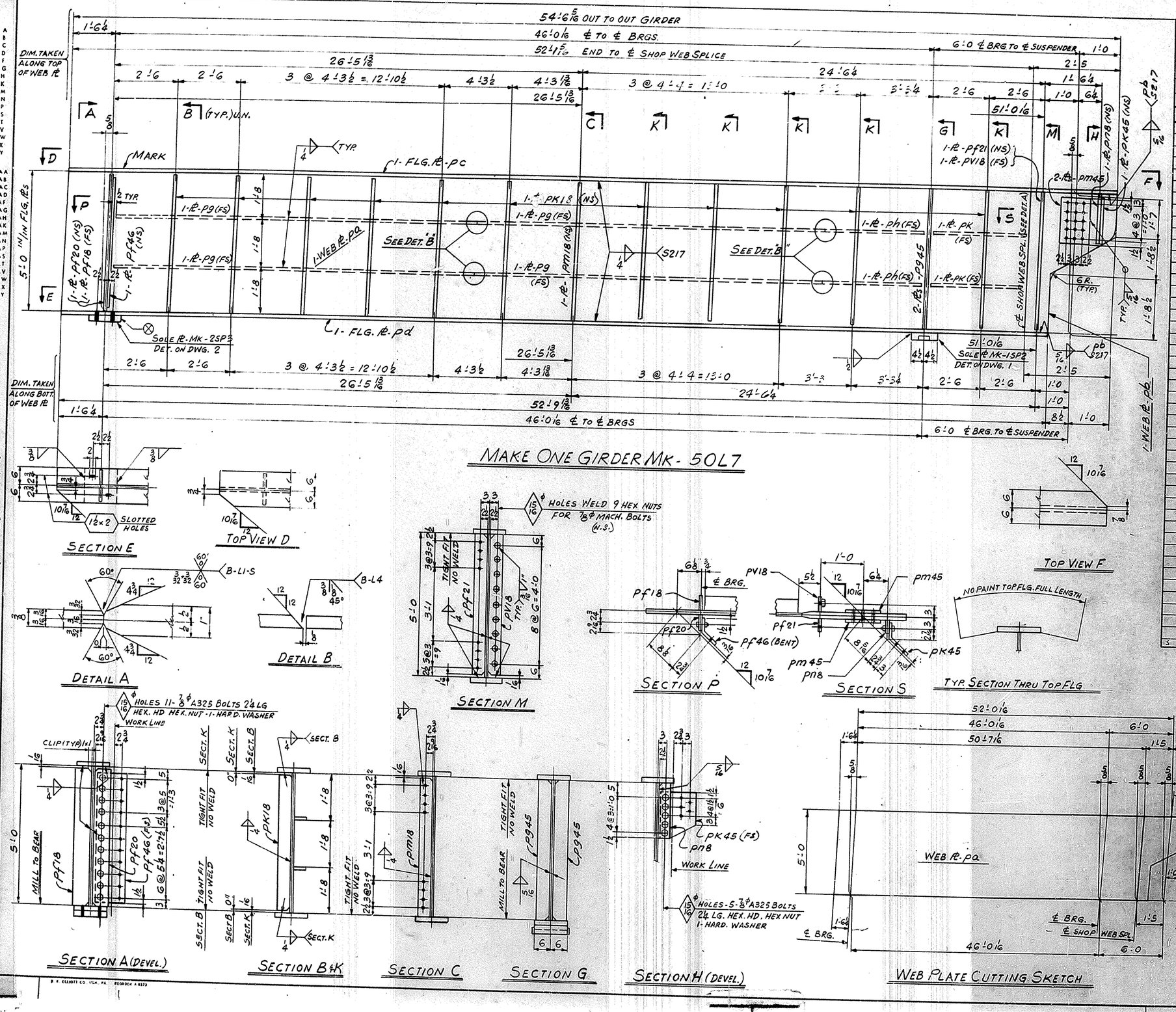

NASHVILLE BRIDGE COMPANY

SHOP ORDER NO. B5725
WORK ORDER NO.
CONTRACT NO. CG736
ITEM

COMMONWEALTH OF KENTUCKY DEPT. OF HIGHWAYS, BRIDGE
OVER NORTH WESTERN PARKWAY & 22ND ST. JEFFERSON COUNTY.

FABRICATION BESSEMER PLANT

BILL NO. 50
DRAWING NO. 50

WEIGHTS BY
CHECKED BY

SHIP	SHIPPING MARK	ITEM COUNT	ASSEMBLY MARK	MARK	SECTION	FINISHED LENGTH FT. IN.	ORDERED LENGTH FT. IN.	P.C. NO.	ITEM NO.	REMARKS	SPECIF. WEIGHT	A.I.S.C. WEIGHT
					MATERIAL ASTM-A36 (U.N.)							
ONE 50L7					GIRDER							
		1	PA	PL	60 x 3/8	52 1 7/8	60 x 52'-6	3901	523	1-PL-G1 x 3'-6 MATCH CUT 1 EA. OB & PD56		13/2
		1	PB	PL	29 5/8 x 1	5 0		3910	306			13/4
		1	PC	PL	12 x 5/8	54 6 7/16	735 CUTS 6 EA.	3910	320			13/6
		1	PD	PL	12 x 5/8	52 9 1/16	635 CUTS 7 EA.	3910	317			13/8
		4	PG	PL	4 x 3/8	20 0		3905	605			13/9
		2	PH	PL	4 x 3/8	5 9 3/8		3905	605			13/10
		2	PK	PL	4 x 3/8	4 5 3/8		3905	605			13/12
		1	PF20	PL	5 1/2 x 1/2	4 11 5/8		3820	406 (MIE)			13/13
		1	PF18	PL	5 1/2 x 1/2	4 11 5/8		3820	406 (MIE)			13/14
		1	PF46	PL	8 1/2 x 3/8	4 7		3372	527 (BENT)			13/15
		11	PK18	PL	4 x 3/8	4 11 5/8		3905	605 (FIE)			13/16
		1	PM18	PL	4 x 3/8	4 11 5/8						13/17
		1	PV18	PL	4 x 3/8	4 11 5/8						13/18
		1	PF21	PL	4 x 3/8	4 11 5/8		3905	605 (FIE)			13/19
		2	PG45	PL	5 1/2 x 1 1/16	5 0		3375	228 (FIE) (MIE)			13/20
		1	PN8	PL	4 x 3/8	1 6 1/2		3905	605			13/21
		1	PK45	PL	11 1/8 x 3/8	1 3		3374	938			13/22
		2	PM45	PL	11 x 3/8	1 3		3374	922			13/23
		1	2SP3	SOLE PL						DET. ON DWG. 2		
		1	1SP2	SOLE PL						DET. ON DWG. 1		
		16		7/8 ϕ BOLTS		0 2 1/4		24661	202 (A325)	HEX. HD. HEX. NUT		
		16		HARD. WASHERS FOR 7/8 ϕ BOLTS				24661	203 (A325)			
		9		7/8 ϕ HEX. NUTS					STK. (A307)			
										SHEET TOTAL		

MATERIAL ASTM-A36 (U.N.)
FOR GENERAL NOTES SEE DWG. GN1
⊗ INDICATES THICKER SIDE OF SOLE PL

59

GIRDER DETAILS SPAN 7E
BRIDGE OVER NORTH WESTERN PARKWAY & 22ND ST.
DEPARTMENT OF HIGHWAYS COMMONWEALTH OF KENTUCKY
JEFFERSON COUNTY F.A.P. 164-2(34); SP36-273 ILL.
CONTRACTOR MATTINGLY BRIDGE CO.

NASHVILLE BRIDGE COMPANY
NASHVILLE, TENN. BESSEMER PLANT

APPROVED FOR SHOP
CHIEF DRAFTSMAN
CHIEF ENGINEER
REVISION NOTES
APPL. CHGS. 7/19/70

HOLES 15/16 ϕ OR NOTED
FIELD CONN. 7/8 ϕ H.S.B.
SHOP PAINT SEE DWG GN1
FIELD
DRAWN BY G.D. DATE 11-5-69
IN CHARGE: GATTI (TEHCOR)
CHECKED BY DATE 12/2/69
DATE PRINTED

BILLS MATERIAL NO. 50
CONT. CG736
S.O. B5725
DRAWING NO. 50

B. K. ELLIOTT CO. YGK. PA. RECORDS # 8373

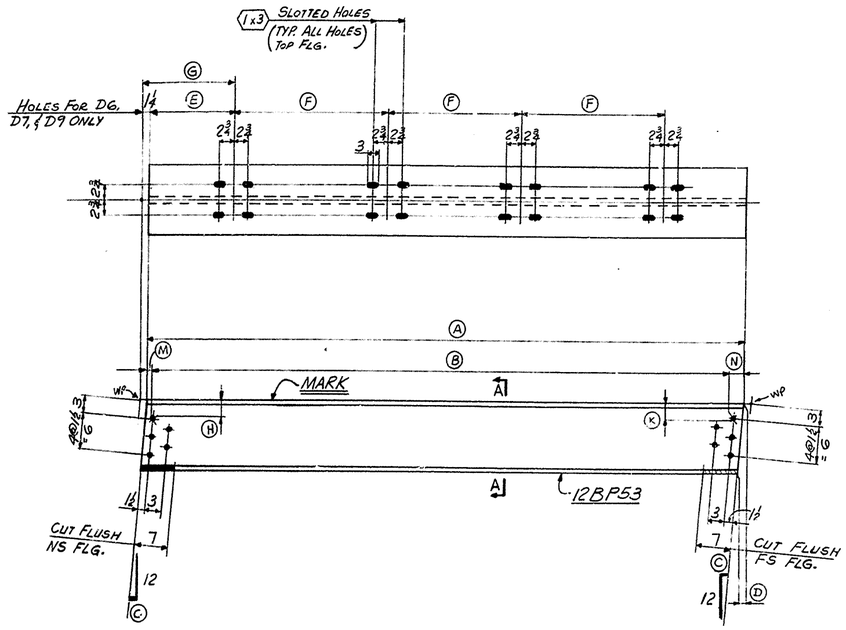

DIAPHRAGMS 51D1 to 51D9 (INCL)
(SEE TABLE BELOW FOR DIM.)

MARK	Nº REQ'D	Ⓐ	Ⓑ	Ⓒ	Ⓓ	Ⓔ	Ⓕ	Ⓖ	Ⓗ	Ⓚ	Ⓜ	Ⓝ
51D1	ONE	7'-10 3/16	7'-7 3/16	7/16	7/16				3 1/16	2 15/16	1 7/16	1 9/16
51D2	ONE	7'-9 3/4	7'-6 3/4	7/16	7/16							
51D3	3	11'-7 3/4	11'-4 3/4	7/16	7/16							
51D4	4	12'-4 5/16	12'-1 5/16	3/8	3/8							
51D5	ONE	11'-7 11/16	11'-4 11/16	5/16	5/16							
51D6	4	11'-7 1/8	11'-4 1/8	3/8	3/8	1'-4	3'-0	1'-5 1/4				
51D7	5	11'-7 1/16	11'-4 1/16	1/4	1/4	1'-4	3'-0	1'-5 1/4				
51D8	2	17'-1 1/16	16'-10 1/16	3/16	3/16				3 1/16	2 15/16	1 7/16	1 9/16
51D9	2	10'-11 1/4	10'-8 1/4	1/8	1/8	7 7/8	3'-0	9 1/8	3	3	1 1/2	1 1/2

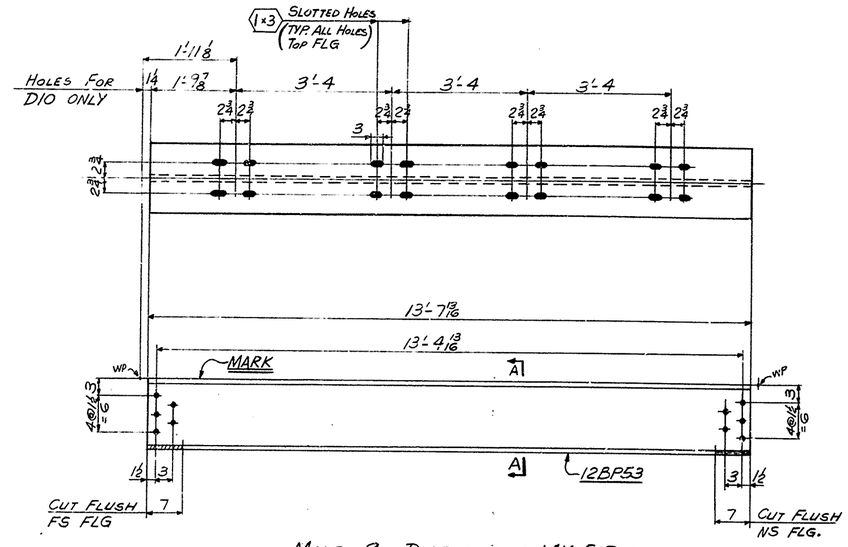

MAKE - 9 - DIAPHRAGMS MK 51D10
MAKE - 9 - DIAPHRAGMS MK 51D11

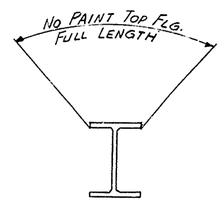

SECTION A-A

NASHVILLE BRIDGE COMPANY

SHOP ORDER NO. B5726
WORK ORDER NO.
CONTRACT NO. C6736

COMMONWEALTH OF KENTUCKY, DEPT. OF HIGHWAYS, BRIDGE OVER NORTHWESTERN PKWY & 22ND ST., JEFFERSON COUNTY

BILL NO. 51
DRAWING NO. 51

FABRICATION BESSEMER PLANT

ITEM
WEIGHTS BY
CHECKED BY

SHIP	SHIPPING MARK	ITEM QUAN.	ASSEMBLY MARK	SHAPE	SELECTION	FINISHED LENGTH FT. IN.	SCREWED LENGTH FT. IN.	P. O. NO.	ITEM NO.	REMARKS	SPECIF. WEIGHT	A I S C WEIGHT
					MAT'L ASTM A36							
ONE	51D1	ONE		BP	12 X 53	7 10 3/8		3904	107			
ONE	51D2	ONE				7 10 3/16			107			
3	51D3	3				11 8 3/16			107			
4	51D4	4				12 4 11/16			107			
ONE	51D5	ONE				11 8			107			
4	51D6	4				11 7 1/2			108			
5	51D7	5				11 7 3/16			108			
2	51D8	2				17 14			107			
2	51D9	2				10 11 3/8			107			
9	51D10	9				13 7 3/16			108			
9	51D11	9		BP	12 X 53	13 7 3/16		3904	108			
										SHEET TOTAL		

NOTES:

ALL MAT'L ASTM A36
FOR GENERAL NOTES
SEE DWG # GN1

60

DIAPHRAGMS I64 & RAMP
BRIDGE OVER NORTHWESTERN PKWY & 22ND ST.
DEPT. OF HIGHWAYS, COMMONWEALTH OF KENTUCKY
JEFFERSON CTY., FAP I64-2(34)1; SP 5C-273-11L
CONTRACTOR: MATTINGLY BRIDGE CO.

NASHVILLE BRIDGE COMPANY
NASHVILLE, TENN.
[redacted] BESSEMER PLANT

APPROVED FOR SHOP
NMF 12/14 CHIEF DRAFTSMAN
JRC 12/14 CHIEF ENGINEER
REVISION NOTES

RIVETS NONE
HOLES 13/16" OR NOTED
FIELD CONN. 7/8" HSB
SHOP PAINT } SEE GN1
FIELD "

DRAWN BY FK DATE 11-4-69
IN CHARGE - SATTI (REVISAR)
CHECKED BY VM DATE 11/24/69
DATE PRINTED [redacted]

BILL MATERIAL NO. 51
CONT. C6736
S. O. B5726
DRAWING NO. 51

BRIDGE

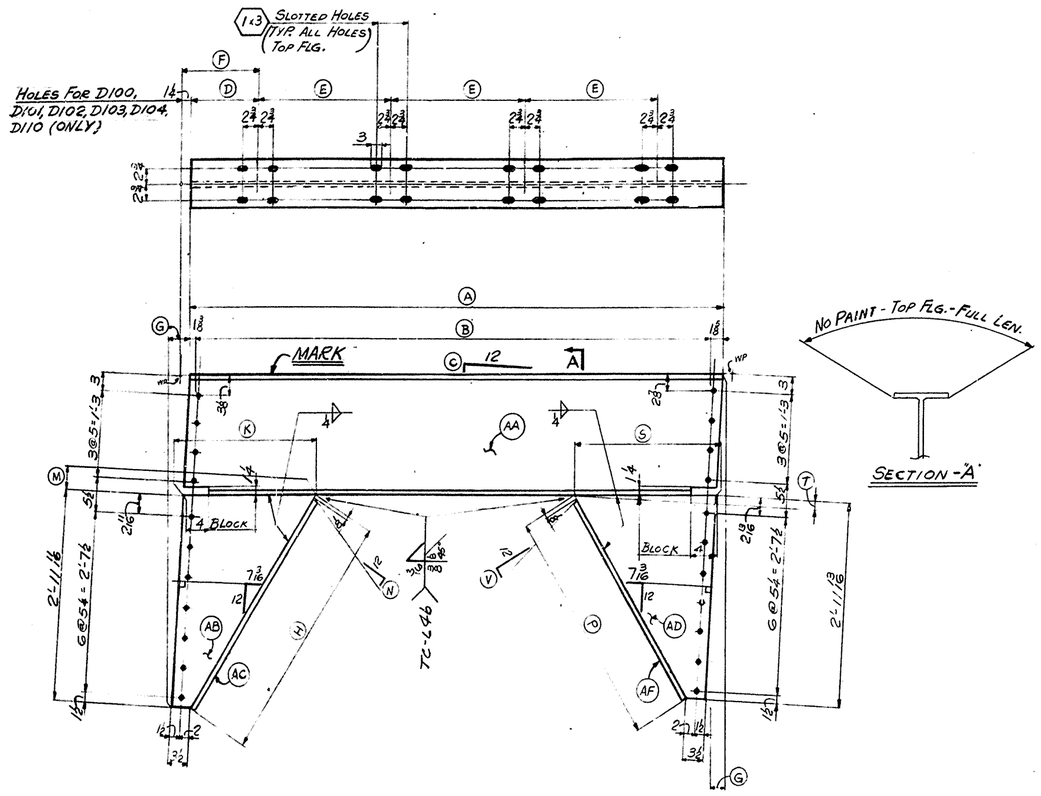

DIAPHRAGMS MK 52D100 TO 52D111 (INCL.)
(SEE TABLE FOR DIM.)

MARK	Nº REQ'D	A	B	C	D	E	F	G	H	K	M	N	P	S	T	V	AA	AB	AC	AD	AF
52D100	ONE	10'-0 7/16"	9'-9 7/16"	7/16	1'-3	2'-6	1'-4 4/4	2 1/16	3'-6 13/16	2'-1 7/16	15/16	2 9/16	3'-4 5/8	2'-0 7/16	15/16	3 7/16	wa	pa	ba	pb	bb
52D101	ONE	10'-0 5/8"	9'-9 5/8"	7/16	1'-3	2'-6	1'-4 4/4	2 1/16	3'-6 13/16	2'-1 9/16	15/16	2 9/16	3'-4 5/8	2'-0 7/16	15/16	3 7/16	wb	pa	ba	pb	bb
52D102	3	11'-11 1/4"	11'-8 3/4"	7/16	1'-5 1/2	3'-0	1'-6 3/4	2 1/16	3'-6 13/16	2'-1 9/16	15/16	2 9/16	3'-4 11/16	2'-0 7/16	7/8	3 7/16	wc	pa	ba	pc	bc
52D103	4	12'-7 11/16"	12'-4 11/16"	7/16	1'-4	3'-4	1'-5 1/4	2 1/16	3'-6 3/4	2'-1 9/16	7/8	2 9/16	3'-4 11/16	2'-0 1/2	7/8	3 7/16	wd	pd	bd	pf	bc
52D104	ONE	8'-10 1/4"	8'-7 1/4"	7/16	11	2'-4	1'-0 1/4	1 15/16	3'-6 3/4	2'-1 1/2	7/8	2 9/16	3'-4 3/4	2'-0 1/2	13/16	3 7/16	wf	pg	bd	ph	bf
52D105	ONE	8'-0 3/8"	7'-9 3/8"	7/16				2 1/16	3'-6 3/4	2'-1 9/16	15/16	2 9/16	3'-4 11/16	2'-0 1/2	7/8	3 7/16	wg	ps	bd	pf	bc
52D106	ONE	8'-1/4"	7'-10 1/4"	7/16				2 1/16	3'-6 3/4	2'-1 9/16	7/8	2 9/16	3'-4 11/16	2'-0 1/2	7/8	3 7/16	wh	pd	bd	pf	bc
52D107	3	12'-0 1/2"	11'-9 1/2"	3/8				1 15/16	3'-6 3/4	2'-1 1/2	7/8	2 9/16	3'-4 3/4	2'-0 1/2	13/16	3 7/16	wk	pg	bd	ph	bf
52D108	ONE	12'-8 7/8"	12'-5 7/8"	3/8				1 7/8	3'-6 11/16	2'-1 1/2	13/16	2 9/16	3'-4 3/4	2'-0 1/2	13/16	3 7/16	wm	pk	bg	ph	bf
52D109	2	12'-9	12'-6	3/8				1 3/4	3'-6 11/16	2'-1 1/2	13/16	2 9/16	3'-4 13/16	2'-0 1/2	13/16	3 7/16	wn	pk	bg	pm	bh
52D110	ONE	8'-10 7/16"	8'-7 7/16"	7/16	11	2'-4	1'-0 1/4	1 15/16	3'-6 3/4	2'-1 1/2	7/8	2 9/16	3'-4 3/4	2'-0 1/2	13/16	3 7/16	wp	pg	bd	ph	bf
52D111	ONE	12'-9 7/8"	12'-6 7/8"	3/8				1 3/4	3'-6 9/16	2'-1 7/16	3/4	2 5/8	3'-4 7/8	2'-0 9/16	3/4	3 3/8	ws	pn	bk	pp	bm

NASHVILLE BRIDGE COMPANY

SHOP ORDER NO. B-5726 | WORK ORDER NO. | CONTRACT NO. C-6736

COMMONWEALTH OF KENTUCKY, DEPT. OF HIGHWAYS, BRIDGE OVER NORTHWESTERN PKWY & 22ND ST., JEFFERSON COUNTY

FABRICATION BESSEMER PLANT

BILL NO. 52A | DRAWING NO. 52

WEIGHTS BY | CHECKED BY

MAT'L ASTM A36

SHIP MARK	ITEM NO.	ASSEMBLE MARK	SECTION	FINAL LENGTH	STOCK LENGTH	NO. PIECES	NUMBERS		ASSE WEIGHT
ONE 52D100			DIAPHRAGM						
	1	wa	WF 21WF55	10 1 3/8			3904 102		
	1	pa	PL 25 7/16 x 3/8	3 0 11/16	STK 3740	410	PL 37 x 2'-6 CUTS 2		
	1	ba	BR 4 x 3/8	3 6 11/16			3905 605		
	1	cb	PL 24 7/16 x 3/8	2 11 13/16	STK 3740	410	PL 36 x 2'-5 CUTS 2		
	1	bb	BR 4 x 3/8	3 4 1/2			3905 605		
ONE 52D101			DIAPHRAGM						
	1	wb	WF 21WF55	10 1 3/8			3904 102		
	1	pa	PL 25 7/16 x 3/8	3 0 11/16	STK 3740	410	PL 37 x 2'-6 CUTS 2		
	1	ba	BR 4 x 3/8	3 6 11/16			3905 605		
	1	pb	PL 24 7/16 x 3/8	2 11 13/16	STK 3740	410	PL 36 x 2'-5 CUTS 2		
	1	bb	BR 4 x 3/8	3 4 1/2			3905 605		
3 52D102			DIAPHRAGM						
	3	wc	WF 21WF55	11 11 3/8			3904 106		
	3	pa	PL 25 7/16 x 3/8	3 0 11/16	STK 3740	410	PL 37 x 2'-6 CUTS 2		
	3	ba	BR 4 x 3/8	3 6 11/16			3905 605		
	3	pc	PL 24 7/16 x 3/8	2 11 13/16	STK 3740	410	PL 36 x 2'-5 CUTS 2		
	3	bc	BR 4 x 3/8	3 4 7/16			3905 605		
4 52D103			DIAPHRAGM						
	4	wd	WF 21WF55	12 8 7/16			3904 103		
	4	pd	PL 25 7/16 x 3/8	3 0 5/8	STK 3740	410	PL 37 x 2'-6 CUTS 2		
	4	bd	BR 4 x 3/8	3 6 5/8			3905 605		
	4	pf	PL 24 1/2 x 3/8	2 11 13/16	STK 3740	410	PL 36 x 2'-5 CUTS 2		
	4	bc	BR 4 x 3/8	3 4 7/16			3905 605		
ONE 52D104			DIAPHRAGM						
	1	wf	WF 21WF55	8 11			3904 104		
	1	pg	PL 25 1/2 x 3/8	3 0 5/8	STK 3740	410	PL 37 x 2'-6 CUTS 2		
	1	bd	BR 4 x 3/8	3 6 5/8			3905 605		
	1	ph	PL 24 1/2 x 3/8	2 11 13/16	STK 3740	410	PL 36 x 2'-5 CUTS 2		
	1	bf	BR 4 x 3/8	3 4 5/8			3905 605		
ONE 52D105			DIAPHRAGM						
	1	wg	WF 21WF55	8 1 5/8			3904 102		
	1	ps	PL 25 7/16 x 3/8	3 0 11/16	STK 3740	410	PL 37 x 2'-6 CUTS 2		
	1	bd	BR 4 x 3/8	3 6 5/8			3905 605		
	1	pf	PL 24 1/2 x 3/8	2 11 13/16	STK 3740	410	PL 36 x 2'-5 CUTS 2		
	1	bc	BR 4 x 3/8	3 4 7/16			3905 605		
							SHEET TOTAL		

NASHVILLE BRIDGE COMPANY

SHOP ORDER NO. B-5726 | WORK ORDER NO. | CONTRACT NO. C-6736

COMMONWEALTH OF KENTUCKY, DEPT. OF HIGHWAYS, BRIDGE OVER NORTHWESTERN PKWY & 22ND ST., JEFFERSON COUNTY

FABRICATION BESSEMER PLANT

BILL NO. 52B | DRAWING NO. 52

WEIGHTS BY | CHECKED BY

MAT'L ASTM A36

SHIP MARK	ITEM NO.	ASSEMBLE MARK	SECTION	FINAL LENGTH	STOCK LENGTH	NO. PIECES	NUMBERS		ASSE WEIGHT
ONE 52D106			DIAPHRAGM						
	1	wh	WF 21WF55	8 2			3904 102		
	1	pd	PL 25 7/16 x 3/8	3 0 5/8	STK 3740	410	PL 37 x 2'-6 CUTS 2		
	1	bd	BR 4 x 3/8	3 6 5/8			3905 605		
	1	pf	PL 24 1/2 x 3/8	2 11 13/16	STK 3740	410	PL 36 x 2'-5 CUTS 2		
	1	bc	BR 4 x 3/8	3 4 7/16			3905 605		
3 52D107			DIAPHRAGM						
	3	wk	WF 21WF55	12 1 7/16			3904 106		
	3	pg	PL 25 1/2 x 3/8	3 0 5/8	STK 3740	410	PL 37 x 2'-6 CUTS 2		
	3	bd	BR 4 x 3/8	3 6 5/8			3905 605		
	3	ph	PL 24 1/2 x 3/8	2 11 13/16	STK 3740	410	PL 36 x 2'-5 CUTS 2		
	3	bf	BR 4 x 3/8	3 4 5/8			3905 605		
ONE 52D108			DIAPHRAGM						
	1	wm	WF 21WF55	12 9 7/16			3904 103		
	1	pk	PL 25 1/2 x 3/8	3 0 5/8	STK 3740	410	PL 37 x 2'-6 CUTS 2		
	1	bg	BR 4 x 3/8	3 6 5/8			3905 605		
	1	ph	PL 24 1/2 x 3/8	2 11 13/16	STK 3740	410	PL 36 x 2'-5 CUTS 2		
	1	bf	BR 4 x 3/8	3 4 5/8			3905 605		
2 52D109			DIAPHRAGM						
	2	wn	WF 21WF55	12 9 11/16			3904 103		
	2	pk	PL 25 1/2 x 3/8	3 0 5/8	STK 3740	410	PL 37 x 2'-6 CUTS 2		
	2	bg	BR 4 x 3/8	3 6 5/8			3905 605		
	2	pm	PL 24 1/2 x 3/8	2 11 13/16	STK 3740	410	PL 36 x 2'-5 CUTS 2		
	2	bh	BR 4 x 3/8	3 4 7/16			3905 605		
ONE 52D110			DIAPHRAGM						
	1	wp	WF 21WF55	8 11 7/16			3904 104		
	1	pg	PL 25 1/2 x 3/8	3 0 5/8	STK 3740	410	PL 37 x 2'-6 CUTS 2		
	1	bd	BR 4 x 3/8	3 6 5/8			3905 605		
	1	ph	PL 24 1/2 x 3/8	2 11 13/16	STK 3740	410	PL 36 x 2'-5 CUTS 2		
	1	bf	BR 4 x 3/8	3 4 5/8			3905 605		
ONE 52D111			DIAPHRAGM						
	1	ws	WF 21WF55	12 9 13/16			3904 103		
	1	pn	PL 25 7/16 x 3/8	3 0 5/8	STK 3740	410	PL 37 x 2'-6 CUTS 2		
	1	bk	BR 4 x 3/8	3 6 5/8			3905 605		
	1	pp	PL 24 7/16 x 3/8	2 11 13/16	STK 3740	410	PL 36 x 2'-5 CUTS 2		
	1	bm	BR 4 x 3/8	3 4 3/8			3905 605		
							SHEET TOTAL		

61

FOR GENERAL NOTES SEE DWG GN1
MAT'L ASTM A36

APPROVED FOR SHOP
WMF 7/13/70 CHIEF DRAFTSMAN
REVISION NOTES
APPL. CHGS. 3/10/70

DIAPHRAGMS I64
BRIDGE OVER NORTHWESTERN PKWY & 22ND ST.
DEPT. OF HIGHWAYS, COMMONWEALTH OF KENTUCKY
JEFFERSON CTY, FAP I64-2(341); SP56-273-11L
CONTRACTOR: MATTINGLY BRIDGE

NASHVILLE BRIDGE COMPANY
NASHVILLE, TENN.
BESSEMER PLANT

RIVETS NONE | HOLES 13/16" OR NOTED | FIELD CONN. 7/8" HSB | SHOP PAINT SEE GN1 | FIELD
DRAWN BY FK DATE 11-6-69 IN CHARGE BATT. CHG.
CHECKED BY VM DATE 11/24/69
DATE PRINTED

BILLS MATERIAL NO. 52A & 52B | CONT. C6736 | S.O. B-5726 | DRAWING NO. 52

BRIDGE

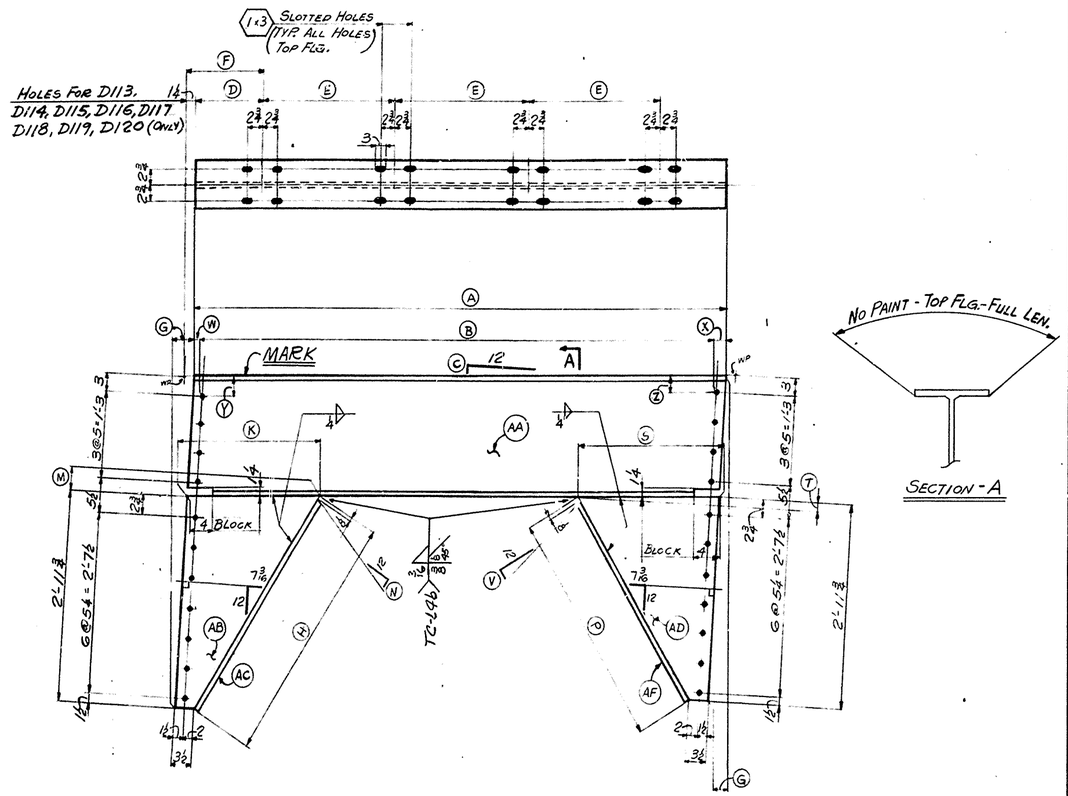

DIAPHRAGMS MK 53D112 TO 53D120 (INCL)

(SEE TABLE FOR DIM.)

MARK	No Req'd	(A)	(B)	(C)	(D)	(E)	(F)	(G)	(H)	(K)	(M)	(N)	(P)	(S)	(T)	(V)	(AA)	(AB)	(AC)	(AD)	(AF)	(W)	(X)	(Y)	(Z)
53D112	ONE	12'-1 15/16	11'-10 15/16	5/16				1 1/2	3'-6 1/2	2'-1 3/8	11/16	2 11/16	3'-4 15/16	2'-0 5/8	5/8	3 5/16	wa	pa	ba	pb	bb	1 1/16	1 9/16	3 1/16	2 15/16
53D113	3	12'-0 1/2	11'-9 1/2	3/8	1'-0 1/4	3'-4	1'-1 1/2	1 3/8	3'-6 11/16	2'-1 1/2	13/16	2 9/16	3'-4 3/4	2'-0 1/2	13/16	3 7/16	wb	pc	bc	pd	bd	1 3/8	1 5/8	3 3/8	2 7/8
53D114	ONE	12'-0 3/4	11'-9 3/4	5/16	1'-0 1/4	3'-4	1'-1 1/2	1 1/2	3'-6 7/16	2'-1 3/8	5/8	2 11/16	3'-5	2'-0 5/8	5/8	3 5/16	wc	pf	bf	pg	bg	1 7/16	1 9/16	3 1/16	2 15/16
53D115	ONE	12'-0 13/16	11'-9 13/16	1/4	1'-0 1/4	3'-4	1'-1 1/2	1 5/16	3'-6 3/8	2'-1 5/16	9/16	2 3/4	3'-5 1/16	2'-0 5/8	9/16	3 1/4	wd	ph	bh	pk	bk	1 7/16	1 9/16	3 1/16	2 15/16
53D116	ONE	12'-0 15/16	11'-9 15/16	1/4	1'-0 1/2	3'-4	1'-1 3/4	1 3/16	3'-6 5/16	2'-1 5/16	1/2	2 3/4	3'-5 1/8	2'-0 11/16	1/2	3 1/4	wf	pm	bm	pn	bn	1 7/16	1 9/16	3 1/16	2 15/16
53D117	ONE	12'-0 15/16	11'-9 15/16	3/16	1'-0 1/2	3'-4	1'-1 3/4	1	3'-6 1/4	2'-1 1/4	7/16	2 3/4	3'-5 3/16	2'-0 3/4	7/16	3 3/16	wg	pp	bp	ps	bs	1 7/16	1 9/16	3 1/16	2 15/16
53D118	ONE	12'-0 13/16	11'-9 13/16	3/16	1'-0 1/4	3'-4	1'-1 1/2	7/8	3'-6 3/16	2'-1 1/4	3/8	2 13/16	3'-5 1/4	2'-0 3/4	3/8	3 3/16	wh	pt	bt	pv	bv	1 7/16	1 9/16	3 1/16	2 15/16
53D119	4	13'-9 3/16	13'-6 3/16	0	1'-5	3'-8	1'-6 1/4	1/8	3'-5 5/8	2'-0 15/16	0	3	3'-5 3/4	2'-1	0	3	wk	pw	bw	px	bx	1 1/2	1 1/2	3	3
53D120	5	13'-9 3/16	13'-6 3/16	1/16	1'-5	3'-8	1'-6 1/4	3/8	3'-5 7/8	2'-1 1/16	3/16	2 15/16	3'-5 1/2	2'-0 7/8	1/8	3 1/16	wm	py	by	paa	baa	1 1/2	1 1/2	3	3

NASHVILLE BRIDGE COMPANY

SHOP ORDER NO. B-5726 | WORK ORDER NO. | CONTRACT NO. C-6736

COMMONWEALTH OF KENTUCKY, DEPT. OF HIGHWAYS, BRIDGE OVER NORTHWESTERN PKWY & 22ND ST., JEFFERSON COUNTY

FABRICATION BESSEMER PLANT

BILL NO. 53A | DRAWING NO. 53

ITEM | WEIGHTS BY | CHECKED BY

MAT'L. ASTM A36

ONE	53D112			DIAPHRAGM							
		1	wa	WF 21WF55	12 2 1/2			3904	106		
		1	pa	PL 25 3/8 x 3/8	3 0 3/16			STK 3740	410	PL 37 x 2'-6 CUTS 2	18
		1	ba	BR 4 x 3/8	3 6 3/8			3905	605		26
		1	pb	PL 24 3/8 x 3/8	2 11 3/4			STK 3740	410	PL 36 x 2'-5 CUTS 2	29
		1	bb	BR 4 x 3/8	3 4 15/16			3905	605		26
											24
3	53D113			DIAPHRAGM							
		3	wb	WF 21WF55	12 1 1/2			3904	106		
		3	pc	PL 25 1/2 x 3/8	3 0 7/16			STK 3740	410	PL 37 x 2'-6 CUTS 2	19
		3	bc	BR 4 x 3/8	3 6 3/16			3905	605		26
		3	pd	PL 24 1/2 x 3/8	2 11 3/4			STK 3740	410	PL 36 x 2'-5 CUTS 2	29
		3	bd	BR 4 x 3/8	3 4 5/8			3905	605		26
											24
ONE	53D114			DIAPHRAGM							
		1	wc	WF 21WF55	12 1 5/16			3904	106		
		1	pf	PL 25 5/8 x 3/8	3 0 5/8			STK 3740	410	PL 37 x 2'-6 CUTS 2	19
		1	bf	BR 4 x 3/8	3 6 5/16			3905	605		26
		1	pg	PL 24 5/8 x 3/8	2 11 3/4			STK 3740	410	PL 36 x 2'-5 CUTS 2	29
		1	bg	BR 4 x 3/8	3 4 3/8			3905	605		26
											24
ONE	53D115			DIAPHRAGM							
		1	wd	WF 21WF55	12 1 4			3904	106		
		1	ph	PL 25 5/16 x 3/8	3 0 5/16			STK 3740	410	PL 37 x 2'-6 CUTS 2	19
		1	bh	BR 4 x 3/8	3 6 4			3905	605		26
		1	pk	PL 24 5/8 x 3/8	2 11 3/4			STK 3740	410	PL 36 x 2'-5 CUTS 2	29
		1	bk	BR 4 x 3/8	3 4 15/16			3905	605		26
											24
ONE	53D116			DIAPHRAGM							
		1	wf	WF 21WF55	12 1 3/8			3904	106		
		1	pm	PL 25 5/16 x 3/8	3 0 1/4			STK 3740	410	PL 37 x 2'-6 CUTS 2	19
		1	bm	BR 4 x 3/8	3 6 3/16			3905	605		26
		1	pn	PL 24 1/16 x 3/8	2 11 3/4			STK 3740	410	PL 36 x 2'-5 CUTS 2	29
		1	bn	BR 4 x 3/8	3 5			3905	605		26
											24
ONE	53D117			DIAPHRAGM							
		1	wg	WF 21WF55	12 1 4			3904	106		
		1	pp	PL 25 1/4 x 3/8	3 0 3/16			STK 3740	410	PL 37 x 2'-6 CUTS 2	19
		1	bp	BR 4 x 3/8	3 6 3/8			3905	605		26
		1	ps	PL 24 3/4 x 3/8	2 11 3/4			STK 3740	410	PL 36 x 2'-5 CUTS 2	29
		1	bs	BR 4 x 3/8	3 5 1/16			3905	605		26
											24
										SHEET TOTAL	

NASHVILLE BRIDGE COMPANY

SHOP ORDER NO. B-5726 | WORK ORDER NO. | CONTRACT NO. C-6736

COMMONWEALTH OF KENTUCKY, DEPT. OF HIGHWAYS, BRIDGE OVER NORTHWESTERN PKWY & 22ND ST., JEFFERSON COUNTY

FABRICATION BESSEMER PLANT

BILL NO. 53B | DRAWING NO. 53

ITEM | WEIGHTS BY | CHECKED BY

MAT'L. ASTM A36

ONE	53D118			DIAPHRAGM							
		1	wh	WF 21WF55	12 1 8			3904	106		
		1	pt	PL 25 1/4 x 3/8	3 0 1/8			STK 3740	410	PL 37 x 2'-6 CUTS 2	18
		1	bt	BR 4 x 3/8	3 6 1/4			3905	605		19
		1	pv	PL 24 3/4 x 3/8	2 11 3/4			STK 3740	410	PL 36 x 2'-5 CUTS 2	26
		1	bv	BR 4 x 3/8	3 5 1/8			3905	605		29
											26
											24
4	53D119			DIAPHRAGM							
		4	wk	WF 21WF55	13 9 3/16	4'-10	CUTS 3	3904	105		
		4	pw	PL 24 1/2 x 3/8	2 11 3/4			STK 3740	410	PL 36 x 2'-5 CUTS 2	20
		4	bw	BR 4 x 3/8	3 5 1/2			3905	605		26
		4	px	PL 25 x 3/8	2 11 3/4			STK 3740	410	PL 36 x 2'-5 CUTS 2	29
		4	bx	BR 4 x 3/8	3 5 3/8			3905	605		26
											24
5	53D120			DIAPHRAGM							
		wm		WF 21WF55	13 9 5/16	4'-10	CUTS 3	3904	105		
		py		PL 25 1/16 x 3/8	2 11 1/16			STK 3740	410	PL 36 x 2'-5 CUTS 2	20
		by		BR 4 x 3/8	3 5 3/8			3905	605		26
		paa		PL 24 3/8 x 3/8	2 11 3/4			STK 3740	410	PL 36 x 2'-5 CUTS 2	29
		baa		BR 4 x 3/8	3 5 3/8			3905	605		26
											24
										SHEET TOTAL	

62

FOR GENERAL NOTES SEE DWG GN1
MATL ASTM A36

APPROVED FOR SHOP
NWC 2/13/70 CHIEF DRAFTSMAN
JMC 2/13/70 CHIEF ENGINEER
REVISION NOTES
APPL. CHGS. 2/10/70

DIAPHRAGMS 164
BRIDGE OVER NORTHWESTERN PKWY & 22ND ST.
DEPT. OF HIGHWAYS, COMMONWEALTH OF KENTUCKY
JEFFERSON CTY, FAP IG4-2(341); SPSG-273-116
CONTRACTOR: MATTINGLY BRIDGE CO.

NASHVILLE BRIDGE COMPANY
NASHVILLE, TENN.
BESSEMER PLANT

RIVETS NONE 3/16" | HOLES 3/16" OR NOTED | FIELD CONN. 7/8" HSB | SHOP PAINT SBB GN1 | FIELD

DRAWN BY FK DATE 11-6-69 | IN CHARGE | CHECKED BY VM DATE 11/24/69 | DATE PRINTED

BILLS MATERIAL NO. 53A & 53B | CONT. C6736 | S.O. B-5726 | 53

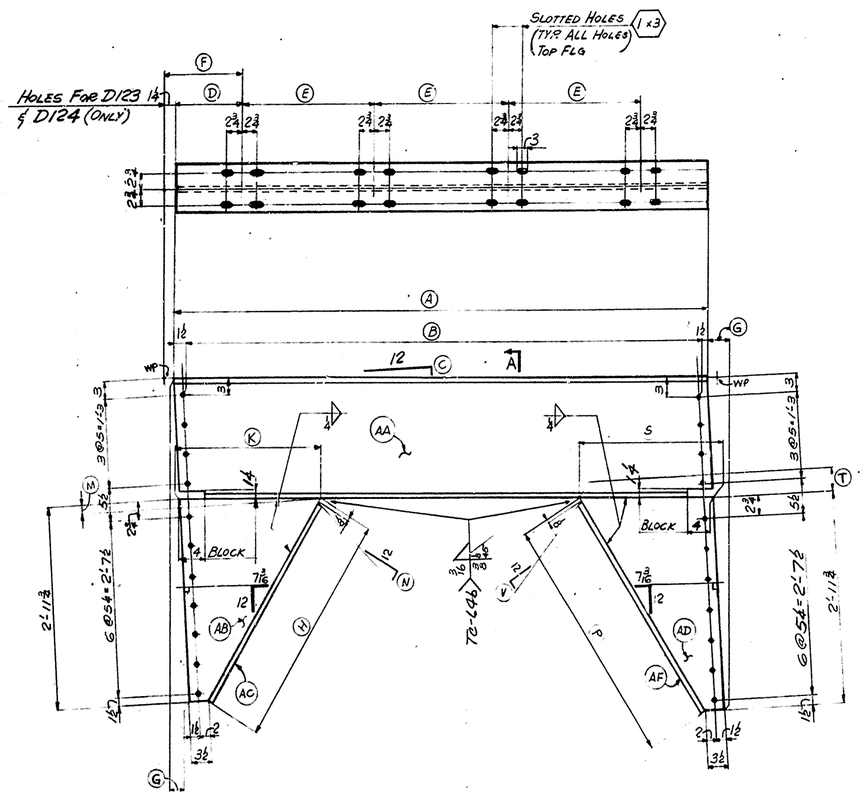

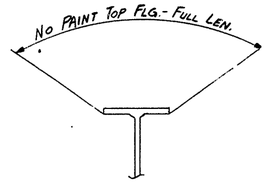

SECTION - A

DIAPHRAGMS MK 54D121 TO 54D124 (INCL)
(SEE TABLE FOR DIM.)

MARK	No REQ'D	A	B	C	D	E	F	G	H	K	M	N	P	S	T	V	AA	AB	AC	AD	AF
54D121	4	13'-9 3/16	13'-6 3/16	1/8				9/16	3'-5 7/16	2'-0 7/8	3/16	3/8	3'-5 15/16	2'-1 1/8	3/16	2 7/8	wa	pa	ba	pb	bb
54D122	5	13'-9 3/16	13'-6 3/16	0				0	3'-5 11/16	2'-1	0	3	3'-5 11/16	2'-1	0	3	wb	pc	bc	pd	bd
54D123	4	13'-8 11/16	13'-5 11/16	1/8	1'-4	3'-8	1'-5 1/4	9/16	3'-5 3/8	2'-0 13/16	5/16	3 3/16	3'-6 1/16	2'-1 1/8	5/16	2 7/8	wc	pf	bf	pg	bg
54D124	5	13'-8 11/16	13'-5 11/16	0	1'-4	3'-8	1'-5 4	1/8	3'-5 5/8	2'-0 15/16	1/16	3	3'-5 13/16	2'-1	1/16	3	wd	ph	bh	pk	bk

NASHVILLE BRIDGE COMPANY

SHOP ORDER NO. B-5726
WORK ORDER NO.
CONTRACT NO. C-6736

COMMONWEALTH OF KENTUCKY, DEPT. OF HIGHWAYS, BRIDGE
OVER NORTHWESTERN PKWY & 22ND ST., JEFFERSON COUNTY

FABRICATION BESSEMER PLANT

BILL NO. 54
DRAWING NO. 54

ITEM | WEIGHTS BY | CHECKED BY

P19

SHIP	SHIPPING MARK	ITEM QUANT	ASSEMBLY MARK		SECTION	FINISHED LENGTH FT. IN.		TRIMMED LENGTH FT. IN.	P.O. NO	ITEM NO	REMARKES	SPECIF. WEIGHT	ATOC WEIGHT	
					MAT'L ASTM A36									
4	54D121				DIAPHRAGM									
		4	wa	WF	21WF55	13	9 3/16	4'-10 CUTS 3	3904	105				20
		4	pa	PL	24 1/8 x 3/8	2	11 3/8		STK 3740	410	PL 36 x 2'-5 CUTS 2			26
		4	ba	BR	4 x 3/8	3	5 5/16		3905	605				24
		4	pb	PL	25 1/8 x 3/8	2	11 5/16		STK 3740	410	PL 36 x 2'-6 CUTS 2			26
		4	bb	BR	4 x 3/8	3	5 5/16		3905	605				24
5	54D122				DIAPHRAGM									
		5	wb	WF	21WF55	13	9 3/16	4'-10 CUTS 3	3904	105				20
		5	pc	PL	25 x 3/8	2	11 3/8		STK 3740	410	PL 36 x 2'-5 CUTS 2			26
		5	bc	BR	4 x 3/8	3	5 5/16		3905	605				24
		5	pd	PL	25 x 3/8	2	11 3/8		STK 3740	410	PL 36 x 2'-5 CUTS 2			26
		5	bd	BR	4 x 3/8	3	5 5/16		3905	605				24
4	54D123				DIAPHRAGM									
		4	wc	WF	21WF55	13	8 11/16	4'-10 CUTS 3	3904	105				20
		4	pf	PL	24 13/16 x 3/8	2	11 3/8		STK 3740	410	PL 36 x 2'-5 CUTS 2			26
		4	bf	BR	4 x 3/8	3	5 5/16		3905	605				24
		4	pg	PL	25 1/8 x 3/8	3	0 1/16		STK 3740	410	PL 37 x 2'-5 CUTS 2			20
		4	bg	BR	4 x 3/8	3	5 5/16		3905	605				24
5	54D124				DIAPHRAGM									
		5	wd	WF	21WF55	13	8 11/16	4'-10 CUTS 3	3904	105				20
		5	ph	PL	24 15/16 x 3/8	2	11 3/8		STK 3740	410	PL 36 x 2'-5 CUTS 2			26
		5	bh	BR	4 x 3/8	3	5 5/16		3905	605				24
		5	pk	PL	25 x 3/8	2	11 3/8		STK 3740	410	PL 36 x 2'-6 CUTS 2			26
		5	bk	BR	4 x 3/8	3	5 5/16		3905	605				24
								SHEET TOTAL						

63

FOR GENERAL NOTES SEE DWG GN1
MAT. ASTM A36

APPROVED FOR SHOP
NME 7/9/70 CHIEF DRAFTSMAN
JAK 7/15/70 CHIEF ENGINEER
REVISION NOTES
APPL. CHGS. 7/10/70

DIAPHRAGMS I 64
BRIDGE OVER NORTHWESTERN PKWY & 22ND ST.
DEPT. OF HIGHWAYS, COMMONWEALTH OF KENTUCKY
JEFFERSON CTY. FAP I64-2(34) & SPSG-273-112
CONTRACTOR: MATTINGLY BRIDGE CO.

NASHVILLE BRIDGE COMPANY
NASHVILLE, TENN.
BESSEMER PLANT

RIVETS NONE
HOLES 25/32 DR. WITH
FIELD CONN. 7/8" HSB
SHOP PAINT SEE
FIELD GHI
DRAWN BY FK DATE 11-6-69
CHECKED BY VM DATE 11/24/69
DATE PRINTED

BILL MATERIAL NO 54
CONT. C6736
S.O. B-5726
DRAWING NO. 54

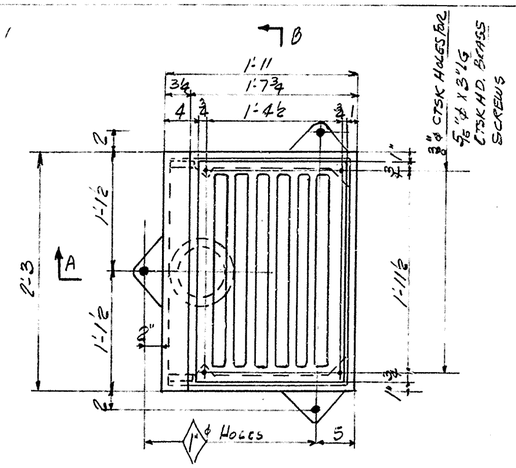

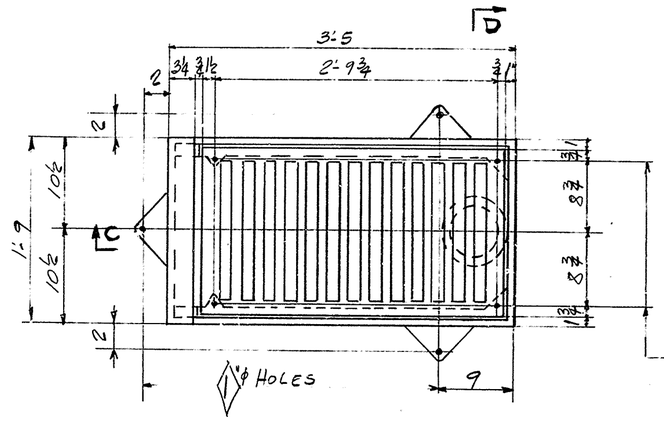

3/8" ϕ CTSK HOLES FOR 5/16" ϕ X 3" LG CTSK HD BRASS SCREWS

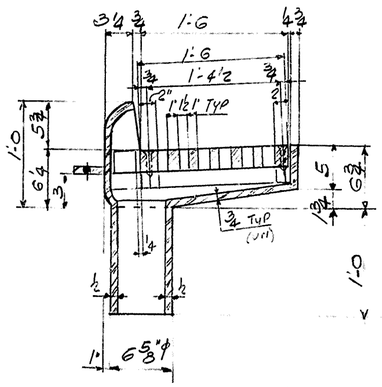

SECTION A

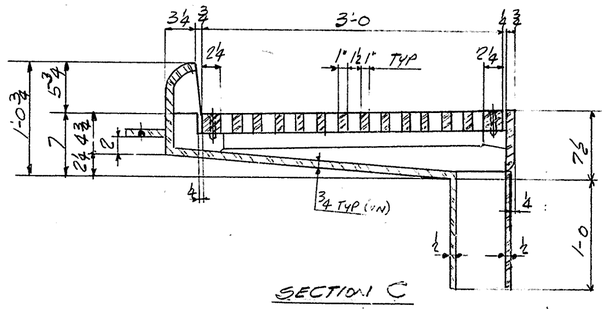

SECTION C

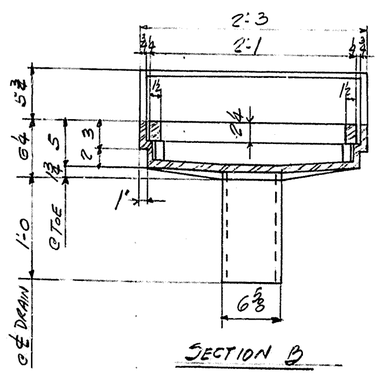

SECTION B

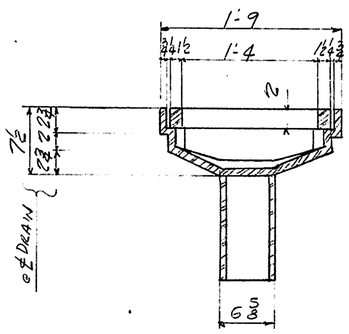

SECTION D

MAKE 7 SCUPPER ASSEMBLIES MK 55SC2

MAKE 5 SCUPPER ASSEMBLIES MK 55SC1

NASHVILLE BRIDGE COMPANY

SHOP ORDER NO. B5728
WORK ORDER NO.
CONTRACT NO. C6736

COMMONWEALTH OF KENTUCKY DEPT. OF HWAYS
BRIDGE OVER NORTH/WESTERN PKWAY & 22ND ST. JEFFERSON COUNTY

BILL NO. 55
DRAWING NO. 55

FABRICATION BESSEMER PLANT

ITEM | WEIGHTS BY | CHECKED BY

SHIP	SHIPPING MARK	ITEM QUANT	ASSEMBLY MARK	SHAPE	SECTION	FINISHED LENGTH FT.	FINISHED LENGTH IN.	ORDERED LENGTH FT.	ORDERED LENGTH IN.	P.O. NO.	ITEM NO.	REMARKS	SPECIF. WEIGHT	AISC WEIGHT
					MAT'L ASTM A48 CLASS 30A UNLESS NOTED									
5	5556				SCUPPER ASSEMBLIES									
		5	PATT #1181		C.S. GRATES					R26-11 R26-12	402	ASTM A27 GRADE 70-36		
		20	lb		BRASS SCREWS 5/16 ϕ	0	3			R26-14	401	CTSK HD COMM. GRADE		
		5	PATT #1178		C.I. SCUPPERS					R26-14	401			
7	5556				SCUPPER ASSEMBLIES									
		7	PATT #1180		C.S. GRATES					R26-11 R26-12	402	ASTM A27 GRADE 70-36		
		28	lb		BRASS SCREWS	0	3			R26-14	401	CTSK HD COMM. GRADE		
		7	PATT #1176		C.I. SCUPPERS					R26-14	401			

SHEET TOTAL

NOTES:
1.) BODY OF DRAIN CASTING SHALL BE GRAY CAST IRON ASTM A48 CLASS NO 30A
2.) DRAIN GRATES SHALL BE CAST STEEL ASTM A27 GRADE 70-36 AND SHALL FIT INTO BODY AND SHIP IN PLACE.
3.) FOR GENERAL NOTES SEE GN1

64

SCUPPER DETAILS
BRIDGE OVER NORTH/WESTERN PKWAY & 22ND ST.
DEPT. OF HWAYS COMMON WEALTH OF KENTUCKY
JEFFERSON COUNTY FAP IC4 2(26)1-5256-273 IL
CONTRACTOR MATTINGLY BRIDGE CO.

NASHVILLE BRIDGE COMPANY
NASHVILLE, TENN.
BESSEMER PLANT

APPROVED FOR SHOP
NWF 9/15/66 CHIEF DRAFTSMAN
JAK 9/15/66 CHIEF ENGINEER
REVISION NOTES

REVISE As OR NOTED
HOLES NOTED OR NOTED
FIELD CONN. —
SHOP PAINT SEE
FIELD " GN1

DRAWN BY JRT DATE 11/4/66
IN CHARGE (GATTI-HUDSON)
CHECKED BY T DATE 12-2-6
DATE PRINTED

BILL MATERIAL NO. 55
CONT. C6736
S.O. B5728
DRAWING NO. 55

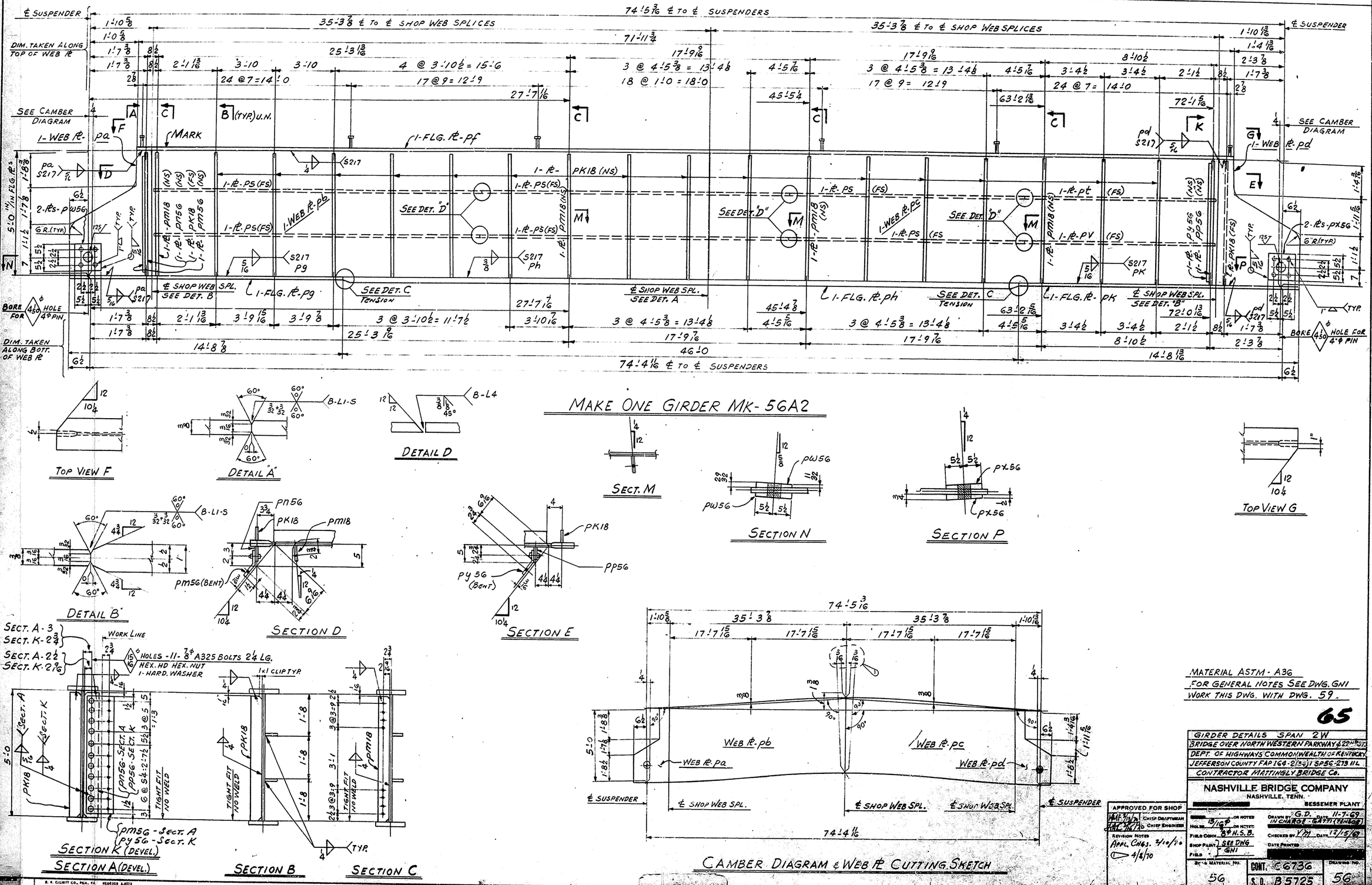

TOP VIEW F

DETAIL A

DETAIL D

MAKE ONE GIRDER MK-56A2

SECT. M

SECTION N

SECTION P

TOP VIEW G

DETAIL B

SECTION D

SECTION E

SECTION K (DEVEL.)

SECTION A (DEVEL.)

SECTION B

SECTION C

CAMBER DIAGRAM & WEB PL CUTTING SKETCH

MATERIAL ASTM-A36
FOR GENERAL NOTES SEE DWG. GN1
WORK THIS DWG. WITH DWG. 59.

65

GIRDER DETAILS SPAN 2W
BRIDGE OVER NORTH WESTERN PARKWAY & 22nd ST.
DEPT. OF HIGHWAYS COMMONWEALTH OF KENTUCKY
JEFFERSON COUNTY FAP 164-2(33) I SP56-273 11L
CONTRACTOR MATTINGLY BRIDGE Co.

NASHVILLE BRIDGE COMPANY
NASHVILLE, TENN.
BESSEMER PLANT

APPROVED FOR SHOP
CHIEF DRAFTSMAN
CHIEF ENGINEER
REVISION NOTES
APPL. CHGS. 7/10/70
4/8/70

DRAWN BY G.D. DATE 11-7-69
IN CHARGE - GATTI (TENLOR)
CHECKED BY DATE 12/15/69
DATE PRINTED

SC'4 MATERIAL No.	CONT. C6736	DRAWING No.
56	S.O. B5725	56

[redacted]

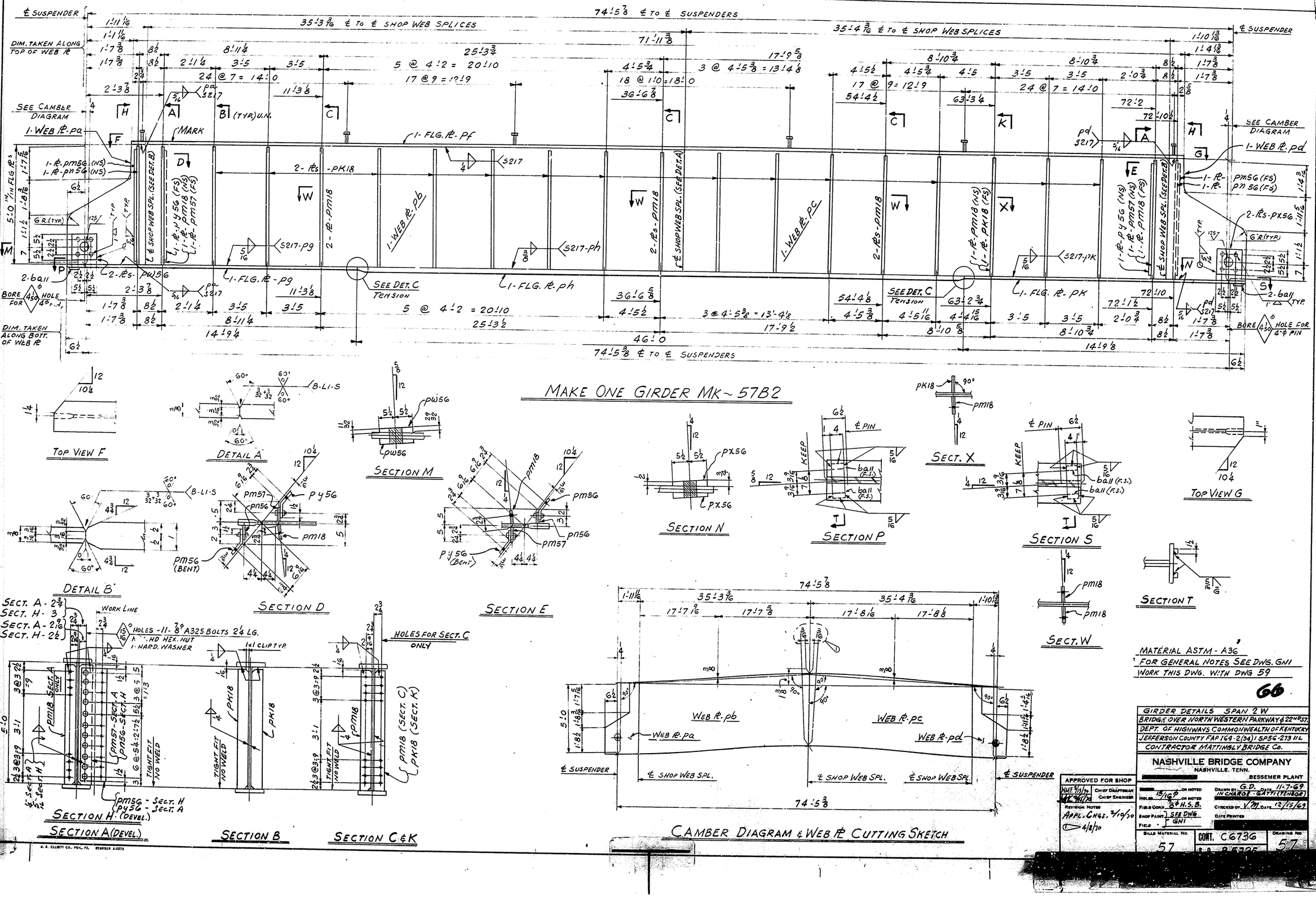
MAKE ONE GIRDER MK-57B2
TOP VIEW F
DETAIL A
SECTION M
SECTION N
SECTION P
SECT. X
SECTION S
TOP VIEW G
DETAIL B
SECTION D
SECTION E
SECTION T
SECT. W
SECTION H (DEVEL.)
SECTION A (DEVEL.)
SECTION B
SECTION C & K
CAMBER DIAGRAM & WEB PL CUTTING SKETCH
MATERIAL ASTM - A36
FOR GENERAL NOTES SEE DWG. GN1
WORK THIS DWG. WITH DWG 59
GIRDER DETAILS SPAN 2 W
BRIDGE OVER NORTH WESTERN PARKWAY & 22ND ST.
DEPT. OF HIGHWAYS COMMONWEALTH OF KENTUCKY
JEFFERSON COUNTY FAP 164-2(34) 1 SP56-273 11L
CONTRACTOR MATTINGLY BRIDGE Co.
NASHVILLE BRIDGE COMPANY
NASHVILLE, TENN.
BESSEMER PLANT
APPROVED FOR SHOP
CHIEF DRAFTSMAN
CHIEF ENGINEER
REVISION NOTES
APPL. CHGS. 3/10/70
4/8/70
DRAWN BY G.D. DATE 11-7-69
IN CHARGE - GATTI (TENNOA)
CHECKED BY DATE 12/15/69
DATE PRINTED
BILL MATERIAL NO. 57
CONT. C6736
DRAWING NO. 57

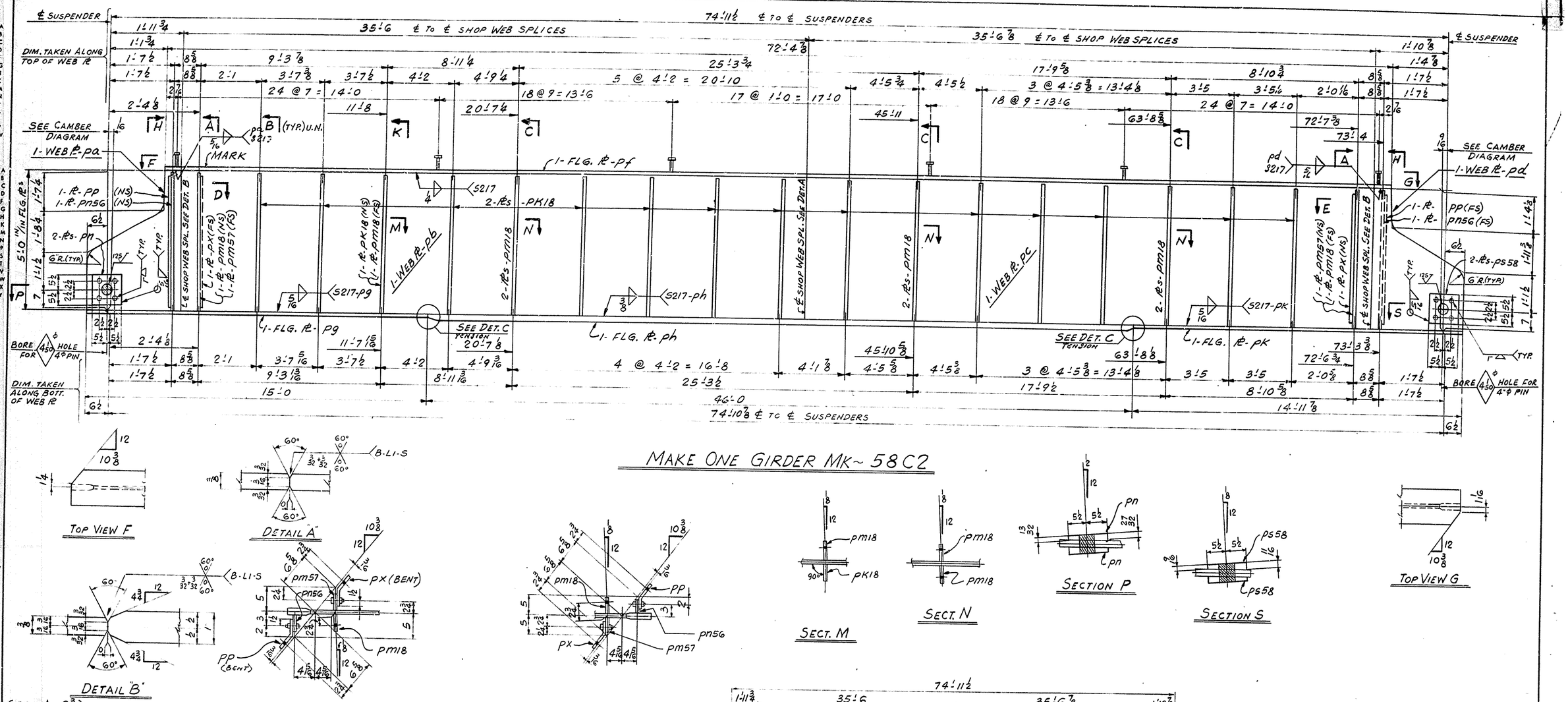

MAKE ONE GIRDER MK~ 58C2

TOP VIEW F

DETAIL "A"

DETAIL "B"

SECTION D

SECTION E

SECT. M

SECT. N

SECTION P

SECTION S

TOP VIEW G

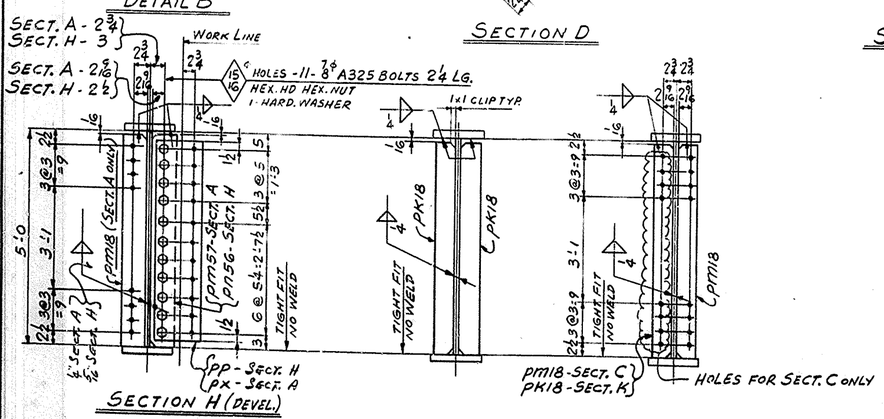

SECTION H (DEVEL.)

SECTION A (DEVEL.)

SECTION B

SECTION C & K

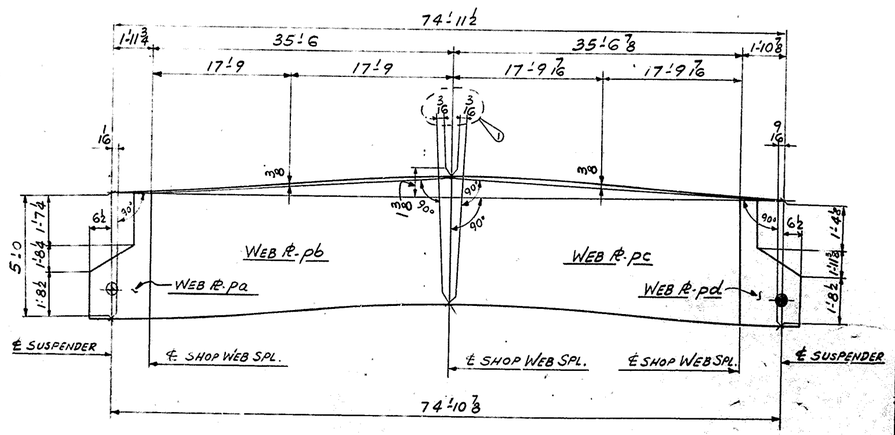

CAMBER DIAGRAM & WEB PL CUTTING SKETCH

MATERIAL ASTM - A36
FOR GENERAL NOTES SEE DWG. GN1
WORK THIS DWG. WITH DWG 59

67

GIRDER DETAILS SPAN 2W
BRIDGE OVER NORTH WESTERN & PARKWAY & 22ND ST.
DEPT. OF HIGHWAYS COMMONWEALTH OF KENTUCKY
JEFFERSON COUNTY FAP 164-2(34) I SP56-273 111.
CONTRACTOR MATTINGLY BRIDGE Co.

NASHVILLE BRIDGE COMPANY
NASHVILLE, TENN.
BESSEMER PLANT

APPROVED FOR SHOP		
WMF 7/13/70	CHIEF DRAFTSMAN	
WMF 7/16/70	CHIEF ENGINEER	
REVISION NOTES		
APPL. CHGS. 7/10/70		
4/8/70		

HOLES 13/16ϕ OR NOTED	DRAWN BY G.D. DATE 11-8-69 IN CHARGE - GATT. (TENSOR)
FIELD CONN. 8ϕ H.S.B.	CHECKED BY V.P. DATE 12/15/69
SHOP PAINT } SEE DWG GN1	DATE PRINTED
FIELD }	
BILL MATERIAL NO. 58	CONT. C6736 S.O. B5725
	DRAWING NO. 58

B. K. ELLIOTT CO., MCH., PA. REORDER B-8373

NASHVILLE BRIDGE COMPANY

SHOP ORDER NO. B5725 | WORK ORDER NO. | CONTRACT NO. C6736

COMMONWEALTH OF KENTUCKY DEPT. OF HIGHWAYS

BRIDGE OVER NORTHWESTERN PARKWAY & 22ND ST. JEFFERSON COUNTY

BILL NO. 56 | DRAWING NO. 56 & 59

FABRICATION BESSEMER PLANT

ITEM | WEIGHTS BY | CHECKED BY

SHIP	SHIPPING MARK	ITEM CODE	ASSEMBLY MARK	SHEET	SECTION	FINISHED LENGTH FT. IN.	ORDERED LENGTH FT. IN.	P.O. NO.	ITEM NO.	REMARKS	WEIGHT	A.I.S.C. WEIGHT
					MATERIAL ASTM-A36 (U.N.)							
ONE 56A2					GIRDER							
		1	pa	PL	29 3/8 × 1	5 0		3910	306	PL 61 × 3/16 MATCH CUT 1 EA. pa & pb18		5/7
		1	pb	PL	60 3/8 × 3/8	35 3 3/8	61 1/2 × 35'-7	3908	431			6/3
		1	pc	PL	60 3/8 × 3/8	35 3 3/8	61 1/2 × 35'-7	3908	431			6/3
		1	pd	PL	29 9/16 × 1	5 0		3910	306	PL 61 × 3/16 MATCH CUT 1 EA. pd & pb50		6/2
		1	pf	PL	12 × 9/16	71 11 3/4	73'-5 CUTS 6 @ 12	3910	330			6/11
		1	pg	PL	12 × 1	14 8 3/8	85'-1 CUTS 7 @ 12	3910	303			6/19
		1	ph	PL	12 × 1 1/16	46 0	49'-4 1/2" CUTS 4 @	3910	214			6/18
		1	pk	PL	12 × 1	14 8 1/8	85'-1 CUTS 7 @ 12	3910	303			6/19
		1	pm56	PL	7 5/8 × 3/8	4 7		STK 3372	528	(BENT)		6/29
		1	pn56	PL	4 × 3/8	4 11 15/16		3905	605	(FIE)		6/27
		1	pp56	PL	4 × 3/8	4 11 15/16				(FIE)		
		16	pk18	PL	4 × 3/8	4 11 15/16				(FIE)		
		4	pm18	PL	4 × 3/8	4 11 15/16			605	(FIE)		6/27
		6	ps	PL	4 × 3/8	20 0			605			6/28
		1	pt	PL	4 × 3/8	10 6 1/4			605			6/28
		1	pv	PL	4 × 3/8	10 6		3905	605			6/28
		2	pw56	PL	11 × 29/32 × 31/32	0 11		3910	303	BEVEL. FIN. 1" PL		6/33
		2	px56	PL	11 × 3/4 × 1/2	0 11		STK 26734	316	BEVEL.		6/34
		1	py56	PL	7 7/8 × 3/8	4 7		STK 3372	528	(BENT)		6/29
		404			3/4 φ STUDS	0 4		27120	301	AUTO-END WELDED		
		22			7/8 φ BOLTS	0 2 1/2		26661	202	(A325) HEX. HD HEX. NUT		
		22			HARD. WASHERS FOR 7/8 φ BOLTS				203	(A325)		

SHEET TOTAL

NASHVILLE BRIDGE COMPANY

SHOP ORDER NO. B5725 | WORK ORDER NO. | CONTRACT NO. C6736

COMMONWEALTH OF KENTUCKY DEPT. OF HIGHWAYS

BRIDGE OVER NORTHWESTERN PARKWAY & 22ND ST. JEFFERSON COUNTY

BILL NO. 57 | DRAWING NO. 57 & 59

FABRICATION BESSEMER PLANT

ITEM | WEIGHTS BY | CHECKED BY

SHIP	SHIPPING MARK	ITEM CODE	ASSEMBLY MARK	SHEET	SECTION	FINISHED LENGTH FT. IN.	ORDERED LENGTH FT. IN.	P.O. NO.	ITEM NO.	REMARKS	WEIGHT	A.I.S.C. WEIGHT
					MATERIAL ASTM-A36 (U.N.)							
ONE 57B2					GIRDER							
		1	pa	PL	30 7/16 × 1	5 0		3910	306	PL 61 × 3/16 MATCH CUT 1 EA. pa, pc107		5/7
		1	pb	PL	60 3/8 × 3/8	35 3 3/16	61 1/2 × 35'-7	3908	431			6/3
		1	pc	PL	60 3/8 × 3/8	35 4 7/16	61 1/2 × 35'-7	3908	431			6/3
		1	pd	PL	29 9/16 × 1	5 0		3910	306	PL 61 × 3/16 MATCH CUT 1 EA. pd & pb49		6/2
		1	pf	PL	12 × 9/16	71 11 3/4	73'-5 CUTS 6 @ 12	3910	330			6/11
		1	pg	PL	12 × 1	14 9 1/4	85'-1 CUTS 7 @ 12	3910	303			6/19
		1	ph	PL	12 × 1 1/16	46 0	49'-4 1/2" CUTS 4 @	3910	214			6/18
		1	pk	PL	12 × 1	14 9 1/8	85'-1 CUTS 7 @ 12	3910	303			6/19
		2	pm56	PL	7 5/8 × 3/8	4 7		STK 3372	528	(BENT)		6/29
		2	pn56	PL	4 × 3/8	4 11 15/16		3905	605	(FIE)		6/27
		2	pm57	PL	4 × 3/8	4 11 15/16				(FIE)		
		9	pm18	PL	4 × 3/8	4 11 15/16				(FIE)		
		27	pk18	PL	4 × 3/8	4 11 15/16		3905	605	(FIE)		6/27
		2	pw56	PL	11 × 29/32 × 31/32	0 11		3910	303	BEVEL. FIN. 1" PL		6/33
		2	px56	PL	11 × 3/4 × 1/2	0 11		STK 26734	316	BEVEL.		6/34
		4	ba11	PL	1 1/2 × 1	0 4		3910	305			
		2	py56	PL	7 7/8 × 3/8	4 7		STK 3372	528	BENT		
		404			3/4 φ STUDS	0 4		27120	301	AUTO-END WELDED		
		44			7/8 φ BOLTS	0 2 1/2		26661	202	(A325) HEX. HD HEX. NUT		
		44			HARD. WASHERS FOR 7/8 φ BOLTS				203	(A325)		

SHEET TOTAL

NASHVILLE BRIDGE COMPANY

SHOP ORDER NO. B5725 | WORK ORDER NO. | CONTRACT NO. C6736

COMMONWEALTH OF KENTUCKY DEPT. OF HIGHWAYS

BRIDGE OVER NORTHWESTERN PARKWAY & 22ND ST. JEFFERSON CO.

BILL NO. 58 | DRAWING NO. 58 & 59

FABRICATION BESSEMER PLANT

ITEM | WEIGHTS BY | CHECKED BY

SHIP	SHIPPING MARK	ITEM CODE	ASSEMBLY MARK	SHEET	SECTION	FINISHED LENGTH FT. IN.	ORDERED LENGTH FT. IN.	P.O. NO.	ITEM NO.	REMARKS	SPECIF. WEIGHT	A.I.S.C. WEIGHT
					MATERIAL ASTM-A36 (U.N.)							
ONE 58C2					GIRDER							
		1	pa	PL	30 5/16 × 1	5 0		3910	306	PL 61 × 3/16 MATCH CUT 1 EA. pa & pc103		5/7
		1	pb	PL	60 3/8 × 3/8	35 6	61 1/2 × 35'-10	3908	436			6/3
		1	pc	PL	60 3/8 × 3/8	35 6 7/16	61 1/2 × 35'-10	3908	436			6/4
		1	pd	PL	29 15/16 × 1	5 0		3910	306	PL 61 × 3/16 MATCH CUT 1 EA. pd & pb46		6/2
		1	pf	PL	12 × 9/16	72 4 3/8	73'-5 CUTS 6 @ 12	3910	330			6/11
		1	pg	PL	12 × 1	15 0	85'-1 CUTS 7 @ 12	3910	303			6/12
		1	ph	PL	12 × 1 1/16	46 0	49'-4 1/2" CUTS 4 @	3910	214			6/20
		1	pk	PL	12 × 1	14 11 3/8	85'-1 CUTS 7 @ 12	3910	303			6/18
		2	pp	PL	7 5/8 × 3/8	4 7		STK 3372	528	(BENT)		6/20
		2	pm57	PL	4 × 3/8	4 11 15/16		3905	605	(FIE)		6/29
		2	pn56	PL	4 × 3/8	4 11 15/16				(FIE)		6/27
		9	pm18	PL	4 × 3/8	4 11 15/16				(FIE)		6/27
		27	pk18	PL	4 × 3/8	4 11 15/16		3905	605	(FIE)		6/27
		2	pn	PL	11 × 29/32 × 31/32	0 11		STK 3790	309	BEVEL. FIN. 1" PL		6/31
		2	pssB	PL	11 × 3/4 × 1/2	0 11		STK 26734	316	BEVEL. FIN. 1" PL		6/34
		2	px	PL	7 7/8 × 3/8	4 7		STK 3372	528	BENT		6/29
		408			3/4 φ STUDS	0 4		27120	301	AUTO-END WELDED		
		44			7/8 φ BOLTS	0 2 1/2		26661	202	(A325) HEX. HD HEX. NUT		
		44			HARD. WASHERS FOR 7/8 φ BOLTS				203	(A325)		

SHEET TOTAL

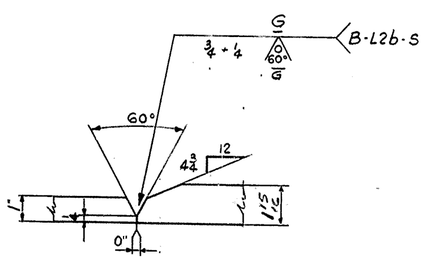

DETAIL "C"

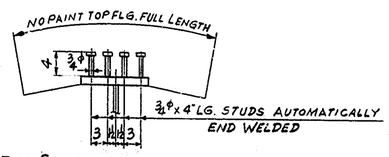

TYP. SECTION THRU TOP FLG.

WORK THIS DWG WITH DWGS. 56, 57 & 58

FOR GENERAL NOTES SEE DWG GN1

MATL ASTM A36 (U.N.)

68

GIRDER DETAILS SPAN 2W

BRIDGE OVER NORTHWESTERN PARKWAY & 22ND ST.

DEPT. OF HIGHWAYS COMMONWEALTH OF KENTUCKY

JEFFERSON COUNTY FAP IC4-2(34) I SP 86-273-111

CONTRACTOR HATTINGER BRIDGE CO.

NASHVILLE BRIDGE COMPANY
NASHVILLE, TENN.
BESSEMER PLANT

APPROVED FOR SHOP: CHIEF DRAFTSMAN / CHIEF ENGINEER

REVISION NOTES: APPL. CHKD. 7/10/70

SCALE 5/16" OR NOTED; FOLD SCALE 3/8" OR NOTED; FIELD DWG. B.H.S.B.; SHOP PAINT SB; FIELD GN1

DRAWN BY G.D. DATE 11-10-69; TRACED BY; CHECKED BY; DATE 12-15-69; DATE PRINTED

BILLS MATERIAL NO. 56, 57, 58 | CONT. C6736 | S.O. B5725 | DRAWING NO. 59

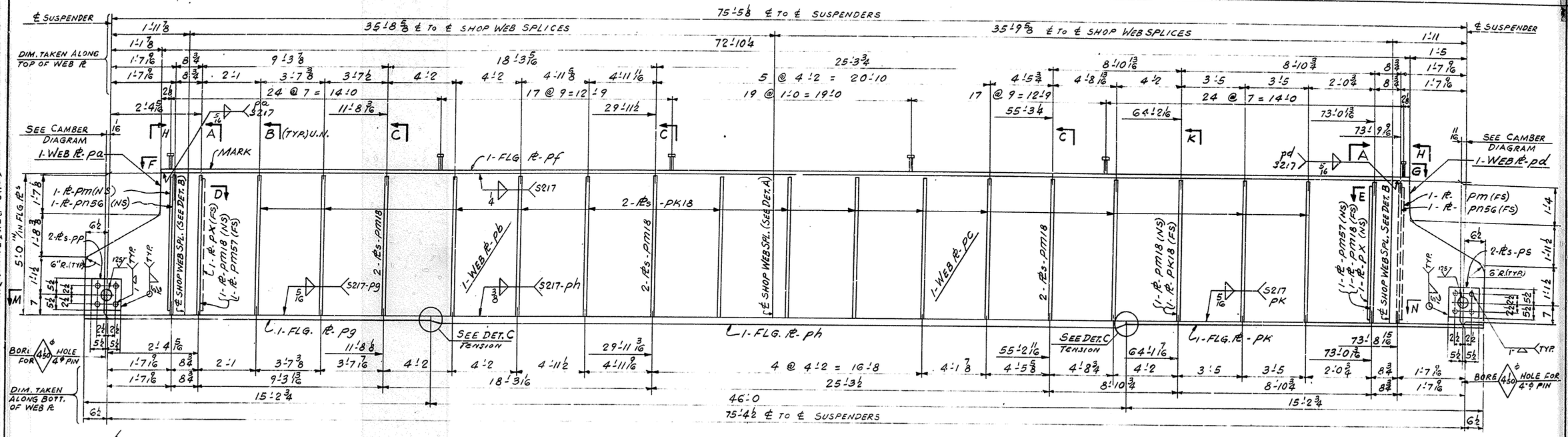

MAKE ONE GIRDER MK-60D2

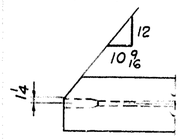
TOP VIEW F

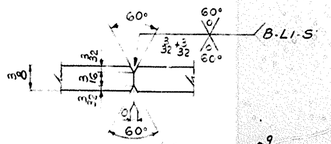
DETAIL A

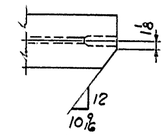
TOP VIEW G

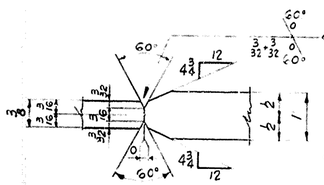
DETAIL "B"

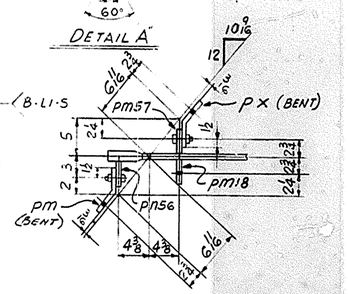
SECTION D

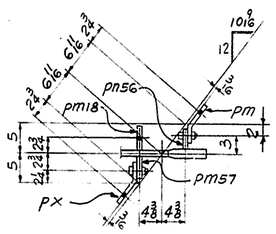
SECTION E

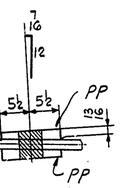
SECTION M

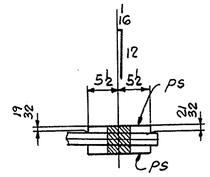
SECTION N

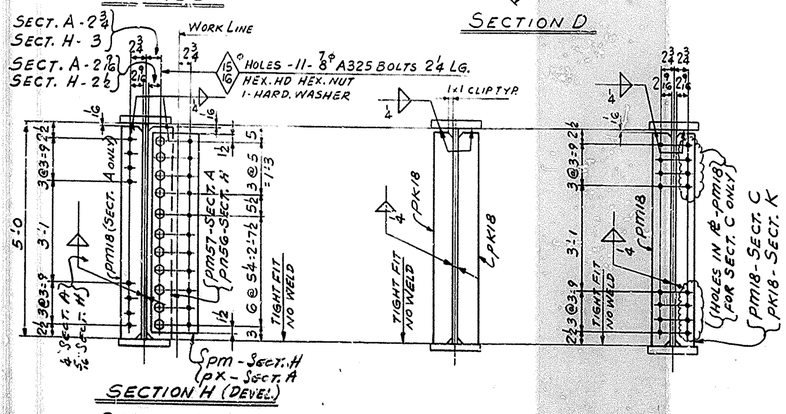
SECTION A (DEVEL.)

SECTION B

SECTION C & K

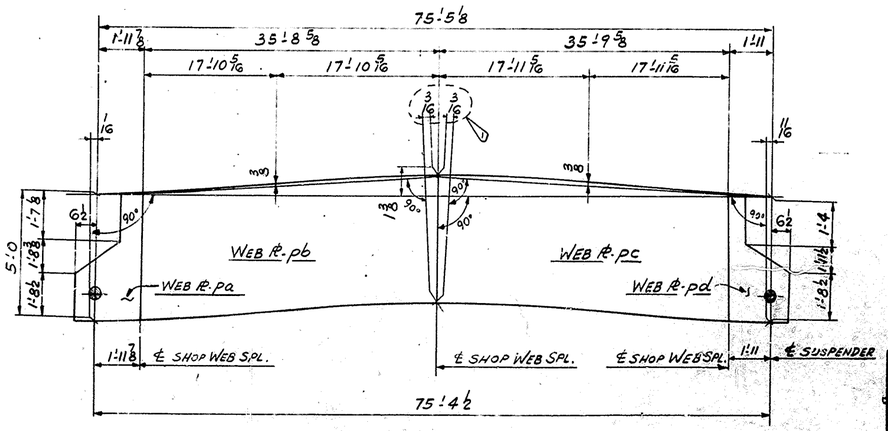
CAMBER DIAGRAM & WEB PL CUTTING SKETCH

MATERIAL ASTM-A36
FOR GENERAL NOTES SEE DWG. GN1
WORK THIS DWG. WITH DWG. 63

69

GIRDER DETAILS SPAN 2W
BRIDGE OVER NORTH WESTERN PARKWAY & 22ND ST.
DEPT. OF HIGHWAYS COMMONWEALTH OF KENTUCKY
JEFFERSON COUNTY FAP 164-2(34) I SP56-273.11L
CONTRACTOR MATTINGLY BRIDGE Co.

NASHVILLE BRIDGE COMPANY
NASHVILLE, TENN.
BESSEMER PLANT

APPROVED FOR SHOP
CHIEF DRAFTSMAN
CHIEF ENGINEER
REVISION NOTES
APPL. 2/43. 7/10/70
4/8/70

HOLES 13/16 ϕ ON NOTED
FIELD DRILL 3/4 ϕ H.S.B. ON NOTED
SHOP PAINT } SEE DWG GN1
FIELD

DRAWN BY G.D. DATE 11-11-69
IN CHARGE - GAYN (TRACE)
CHECKED BY VM DATE 12/15/69
DATE PRINTED

BILL MATERIAL NO. 60
CONT. C6736
S.O. B5725
DRAWING NO. 60

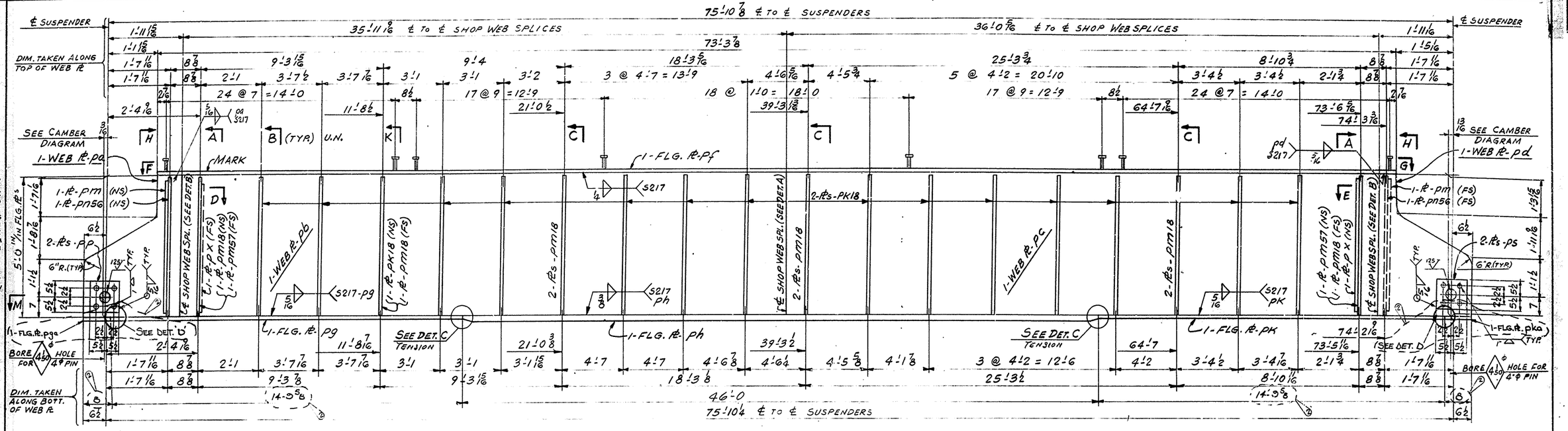

MAKE ONE GIRDER MK-61E2

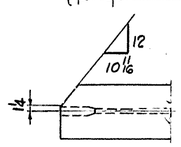
TOP VIEW F

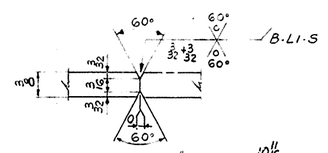
DETAIL A

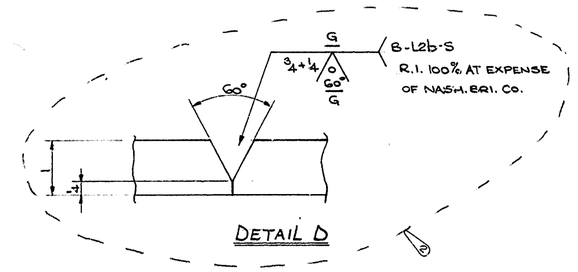

DETAIL D

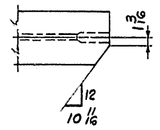
TOP VIEW G

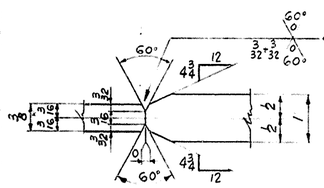
DETAIL B

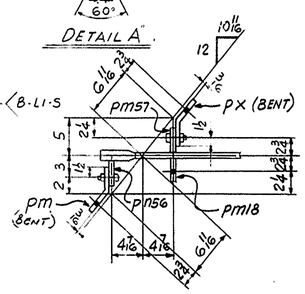

SECTION D

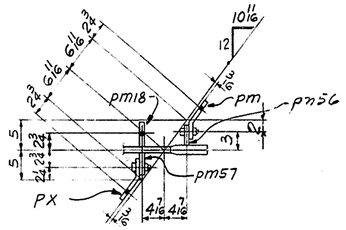

SECTION E

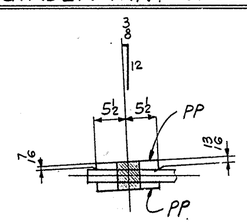

SECTION M

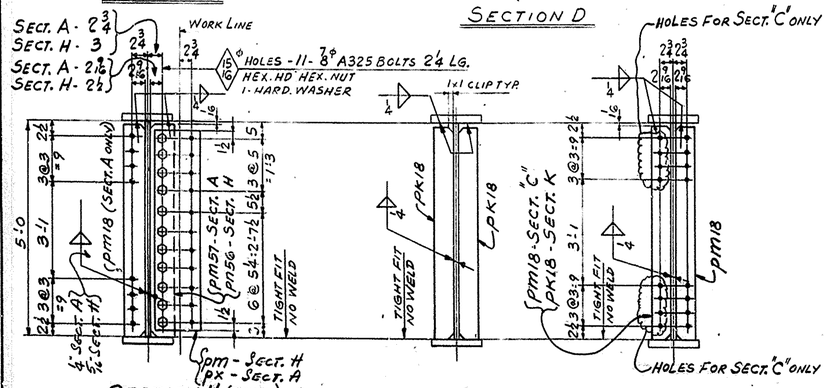

SECTION H (DEVEL.)
SECTION A (DEVEL.)
SECTION B
SECTION C & K

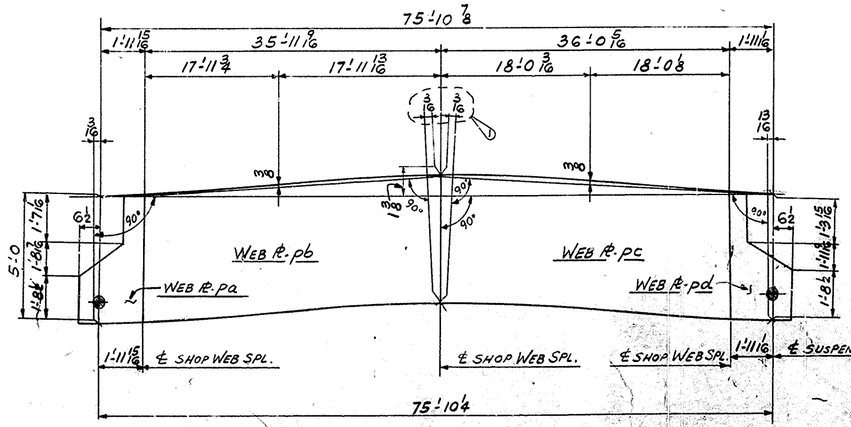

CAMBER DIAGRAM & WEB PL CUTTING SKETCH

STA 146+90
DRAWING 17123
LETTING DATE - MAY 29, 1969

MATERIAL ASTM - A36
FOR GENERAL NOTES SEE DWG. GN1
WORK THIS DWG. WITH DWG. G3

70

GIRDER DETAILS SPAN 2W
BRIDGE OVER NORTH WESTERN PARKWAY & 22ND ST.
DEPT. OF HIGHWAYS COMMONWEALTH OF KENTUCKY
JEFFERSON COUNTY FAP 164-2(34) I SP56-279 11L
CONTRACTOR MATTINGLY BRIDGE Co.

NASHVILLE BRIDGE COMPANY
NASHVILLE, TENN.
BESSEMER PLANT

HOLES	13/16" ϕ OR NOTED
FIELD CONN.	B & H.S.B.
SHOP PAINT	SEE DWG GN1
FIELD	
DRAWN BY	G.D. DATE 11-11-69
IN CHARGE	SATTI (TANSOR)
CHECKED BY	VM DATE 12/15/69
DATE PRINTED	
BILL MATERIAL NO.	61
CONT.	C6736
S.O.	B5725
DRAWING NO.	61

APPROVED FOR SHOP
WWF 7/10/70 CHIEF DRAFTSMAN
CHIEF ENGINEER
REVISION NOTES
APPL. CHGS. 2/10/70
1 4/2/70
2 4/30/70

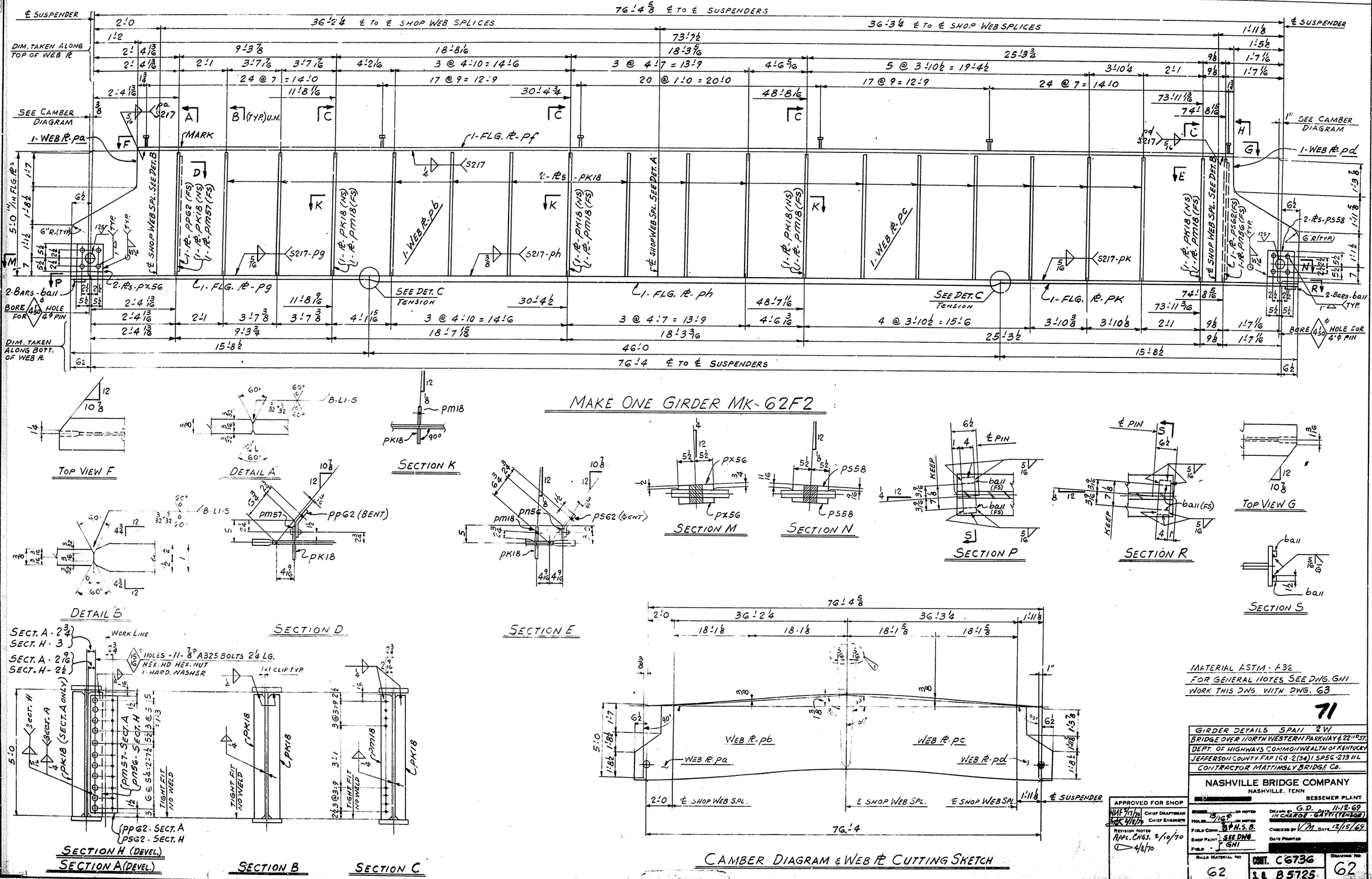
MAKE ONE GIRDER MK-62F2
TOP VIEW F
DETAIL A
SECTION K
SECTION M
SECTION N
SECTION P
SECTION R
TOP VIEW G
SECTION S
DETAIL B
SECTION D
SECTION E
SECTION H (DEVEL.)
SECTION A (DEVEL.)
SECTION B
SECTION C
CAMBER DIAGRAM & WEB PL CUTTING SKETCH
MATERIAL ASTM-A36
FOR GENERAL NOTES SEE DWG. GN1
WORK THIS DWG WITH DWG. 63
71
GIRDER DETAILS SPAN 2W
BRIDGE OVER NORTH WESTERN PARKWAY & 22ND ST.
DEPT. OF HIGHWAYS COMMONWEALTH OF KENTUCKY
JEFFERSON COUNTY FAP 164-2(34) I SP56-273 IL
CONTRACTOR MATTINGLY BRIDGE Co.
NASHVILLE BRIDGE COMPANY
NASHVILLE, TENN
BESSEMER PLANT
APPROVED FOR SHOP
CHIEF DRAFTSMAN
CHIEF ENGINEER
REVISION NOTES
APPL. CHGS. 2/10/70
4/8/70
DRAWN BY G.D. DATE 11-12-69
IN CHARGE GATTI
CHECKED BY VM DATE 12/5/69
DATE PRINTED
FIELD COPY B+H.S.B.
SHOP PAINT SEE DWG GN1
BILLS MATERIAL NO 62
CONT. C6736
S.O. B5725
DRAWING NO 62

NASHVILLE BRIDGE COMPANY

SHOP ORDER NO. B5725 | WORK ORDER NO. | CONTRACT NO. C6736

COMMONWEALTH OF KENTUCKY DEPT. OF HIGHWAYS

BRIDGE OVER NORTHWESTERN PARKWAY & 22ND ST. JEFFERSON COUNTY

BILL NO. 60 | DRAWING NO. 60 & 63

FABRICATION BESSEMER PLANT

ITEM | WEIGHTS BY | CHECKED BY

SKID	SHIPPING MARK	ITEM QUANT	ASSEMBLY MARK	SHAPE	SECTION	FINISHED LENGTH FT. IN.	ORDERED LENGTH FT. IN.	P.O. NO.	ITEM NO.	REMARKS	SPECIF. WEIGHT	A.I.S.C. WEIGHT	
					MATERIAL ASTM-A36 (U.N.)								
ONE	60D2				GIRDER								
		1	pa	PL	30 7/16 × 1	5 0		3910	306	PL 61 × 3/8 MATCH CUT 1 EA. pa & pb106			5/7
		1	pb	PL	60 3/8 × 3/8	35 8 1/16	61 1/2 × 36'-0	3908	428				6/5
		1	pc	PL	60 3/8 × 3/8	35 9 5/8	61 1/2 × 36'-0	3908	429	PL 61 × 3/8 MATCH CUT 1 EA pd & pb49			6/5
		1	pd	PL	30 7/16 × 1	5 0		3910	306				6/2
		1	pf	PL	12 × 9/16	72 10 1/4	73 1/2 × 73'-6 CUT 5'-6	3910	330				6/13
		1	pg	PL	12 × 1	15 2 3/4	85 1/2 CUTS 7 3/12	3910	302				6/21
		1	ph	PL	12 × 1 1/16	46 0	49 1/2 × 46'-2 CUT 3'-4	3910	214				6/18
		1	pk	PL	12 × 1	15 2 3/4	85 1/2 CUTS 7 3/12	3910	302				6/21
		2	pm	PL	7 5/8 × 3/8	4 7		STK 3372	528	(BENT)			6/29
		2	pm56	PL	4 × 3/8	4 11 1/16		3905	605	(FIE)			6/27
		2	pm57	PL	4 × 3/8	4 11 1/16				(FIE)			6/27
		9	pm18	PL	4 × 3/8	4 11 1/16				(FIE)			6/27
		27	pk18	PL	4 × 3/8	4 11 1/16		3905	605	(FIE)			6/27
		2	pp	PL	11 × 13/16 × 1/16	0 11		STK 3740	309	BEVEL. FIN. 3/8" PL			6/31
		2	ps	PL	11 × 21/32 × 5/32	0 11		STK 2674	316	BEVEL. FIN. 3/8" PL			6/34
		2	px	PL	7 7/8 × 3/8	4 7		STK 3372	528	BENT			6/29
		408			3/4 ϕ STUDS	0 4		27120	301	AUTO-END WELDED			
		44			7/8 ϕ BOLTS	0 2 1/4		26661	202	(A325) HEX. HD HEX NUT			
		44			HARD. WASHERS FOR 7/8 ϕ BOLTS				203	(A325)			

SHEET TOTAL

NASHVILLE BRIDGE COMPANY

SHOP ORDER NO. B5725 | WORK ORDER NO. | CONTRACT NO. C6736

COMMONWEALTH OF KENTUCKY DEPT. OF HIGHWAYS

BRIDGE OVER NORTHWESTERN PARKWAY & 22ND ST. JEFFERSON COUNTY

BILL NO. 61 | DRAWING NO. 61 & 63

FABRICATION BESSEMER PLANT

ITEM | WEIGHTS BY | CHECKED BY

SKID	SHIPPING MARK	ITEM QUANT	ASSEMBLY MARK	SHAPE	SECTION	FINISHED LENGTH FT. IN.	ORDERED LENGTH FT. IN.	P.O. NO.	ITEM NO.	REMARKS	SPECIF. WEIGHT	A.I.S.C. WEIGHT	
					MATERIAL ASTM-A36 (U.N.)								
ONE	61E2				GIRDER								
		1	pa	PL	30 5/8 × 1	5 0		3910	306	61 × 3/8 MATCH CUT 1 EA. pa & pc104			5/7
		1	pb	PL	60 3/8 × 3/8	35 11 3/8	61 1/2 × 36'-3	3908	428				6/6
		1	pc	PL	60 3/8 × 3/8	36 0 1/8	61 1/2 × 36'-3	3908	428				6/6
		1	pd	PL	30 3/8 × 1	5 0		3910	306	PL 61 × 3/8 MATCH CUT 1 EA. pd & pb48			6/2
		1	pf	PL	12 × 9/16	73 3/8	73 1/2 × 74'-0 CUT 5'-6	3910	329				6/14
(1)		1	pg	PL	12 × 1	14 3/8	85 1/2 CUTS 7 3/12	3910	302				6/22
		1	ph	PL	12 × 1 1/16	46 0	49 1/2 × 46'-2 CUT 3'-4	3910	214				6/18
(1)		1	pk	PL	12 × 1	14 3/8	85 1/2 CUTS 7 3/12	3910	302				6/22
		2	pm	PL	7 5/8 × 3/8	4 7		STK 3372	528	(BENT)			6/29
		2	pm56	PL	4 × 3/8	4 11 1/16		3905	605	(FIE)			6/27
		2	pm57	PL	4 × 3/8	4 11 1/16							
		9	pm18	PL	4 × 3/8	4 11 1/16							
		29	pk18	PL	4 × 3/8	4 11 1/16		3905	605	(FIE)			6/27
		2	pp	PL	11 × 13/16 × 1/16	0 11		STK 3740	309	BEVEL. FIN. 3/8" PL			6/31
		2	ps	PL	11 × 5/8	0 11		STK 3774	322				6/32
		2	px	PL	7 7/8 × 3/8	4 7		STK 3372	528	BENT			6/29
		412			3/4 ϕ STUDS	0 4		27120	301	AUTO-END WELDED			
(1)		1	pga	PL	12 × 1	0 8		STK 1					
(1)		1	pka	PL	12 × 1	0 8							
		44			7/8 ϕ BOLTS	0 2 1/4		26661	202	(A325) HEX. HD HEX. NUT			
		44			HARD. WASHERS FOR 7/8 ϕ BOLTS				203	(A325)			

SHEET TOTAL

NASHVILLE BRIDGE COMPANY

SHOP ORDER NO. B5725 | WORK ORDER NO. | CONTRACT NO. C6736

COMMONWEALTH OF KENTUCKY DEPT. OF HIGHWAYS

BRIDGE OVER NORTHWESTERN PARKWAY & 22ND ST. JEFFERSON CO.

BILL NO. 62 | DRAWING NO. 62 & 63

FABRICATION BESSEMER PLANT

ITEM | WEIGHTS BY | CHECKED BY

SKID	SHIPPING MARK	ITEM QUANT	ASSEMBLY MARK	SHAPE	SECTION	FINISHED LENGTH FT. IN.	ORDERED LENGTH FT. IN.	P.O. NO.	ITEM NO.	REMARKS	SPECIF. WEIGHT	A.I.S.C. WEIGHT	
					MATERIAL ASTM-A36 (U.N.)								
ONE	62F2				GIRDER								
		1	pa	PL	30 7/16 × 1	5 0		3910	306	PL 61 × 3/8 MATCH CUT 1 EA. pa & pd48			5/7
		1	pb	PL	60 3/8 × 3/8	36 0 3/8	61 1/2 × 36'-6	3908	427				6/6
		1	pc	PL	60 3/8 × 3/8	36 3/16	61 1/2 × 36'-6	3908	427				6/6
		1	pd	PL	30 3/8 × 1	5 0		3910	306	PL 61 × 3/8 MATCH CUT 1 EA. pd & pb46			6/2
		1	pf	PL	12 × 9/16	73 9/16	73 1/2 × 74'-0 CUT 5'-6	3910	329				6/14
		1	pg	PL	12 × 1	15 8 1/2	85 1/2 CUTS 7 3/12	3910	302				6/22
		1	ph	PL	12 × 1 1/16	46 0	49 1/2 × 46'-2 CUT 3'-4	3910	214				6/18
		1	pk	PL	12 × 1	15 8 1/2	85 1/2 CUTS 7 3/12	3910	302				6/22
		1	pp62	PL	7 7/8 × 3/8	4 7		STK 3372	528	(BENT)			6/29
		1	pm57	PL	4 × 3/8	4 11 1/16		3905	605	(FIE)			6/27
		1	pm56	PL	4 × 3/8	4 11 1/16							
		33	pk18	PL	4 × 3/8	4 11 1/16							
		4	pm18	PL	4 × 3/8	4 11 1/16		3905	605	(FIE)			6/27
		2	px56	PL	11 3/8 × 1/2	0 11		STK 2674	316	BEV.			6/34
		2	ps58	PL	11 × 11/16 × 1/8	0 11		STK 2674	316	BEV. FIN. 3/8" PL			6/34
		4	ba11	PL	12 × 1	0 4		3910	305				6/34
		1	ps62	PL	7 3/8 × 3/8	4 7		STK 3372	528	(BENT)			6/29
		412			3/4 ϕ STUDS	0 4		27120	301	AUTO-END WELDED			
		22			7/8 ϕ BOLTS	0 2 1/4		26661	202	(A325) HEX. HD HEX. NUT			
		22			HARD. WASHERS FOR 7/8 ϕ BOLTS				203	(A325)			

SHEET TOTAL

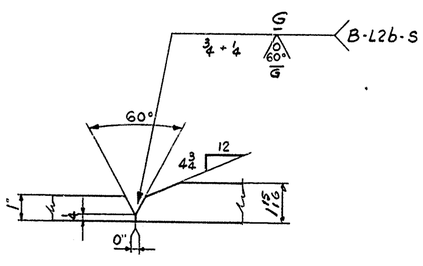

DETAIL "C"

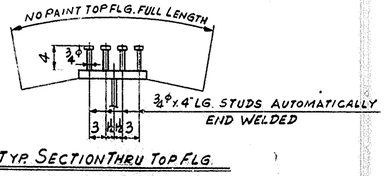

TYP. SECTION THRU TOP FLG.

WORK THIS DWG. WITH DWGS. 60, 61, 62

FOR GENERAL NOTES SEE DWG GN1

MATL ASTM A36 (UN)

'72

GIRDER DETAILS SPAN 2W

BRIDGE OVER NORTHWESTERN PARKWAY & 22ND ST.

DEPT. OF HIGHWAYS COMMONWEALTH OF KENTUCKY

JEFFERSON COUNTY FAP IG4-2(36) I SP 56-273-112

CONTRACTOR MATTINGLY BRIDGE CO.

NASHVILLE BRIDGE COMPANY
NASHVILLE, TENN.
BESSEMER PLANT

APPROVED FOR SHOP: CHIEF DRAFTSMAN, CHIEF ENGINEER

REVISION NOTES: APPL. CHGS. 2/10/70; (1) 4/30/70

SCALE 5/16 ϕ OR NOTED | HOLES 3/4 OR NOTED | FIELD CONN. H.S.B. | SHOP PAINT SB4 | FIELD GN1

DRAWN H. G.D. DATE 11-12-69 | IN CHARGE DATE (21-50) | CHECKED BY 1/77 DATE 12/15/69 | DATE PRINTED

BILL NO. / SERIAL NO. 60, 61, 62 | CONT. C6736 | S.O. B5725 | DRAWING NO. 63

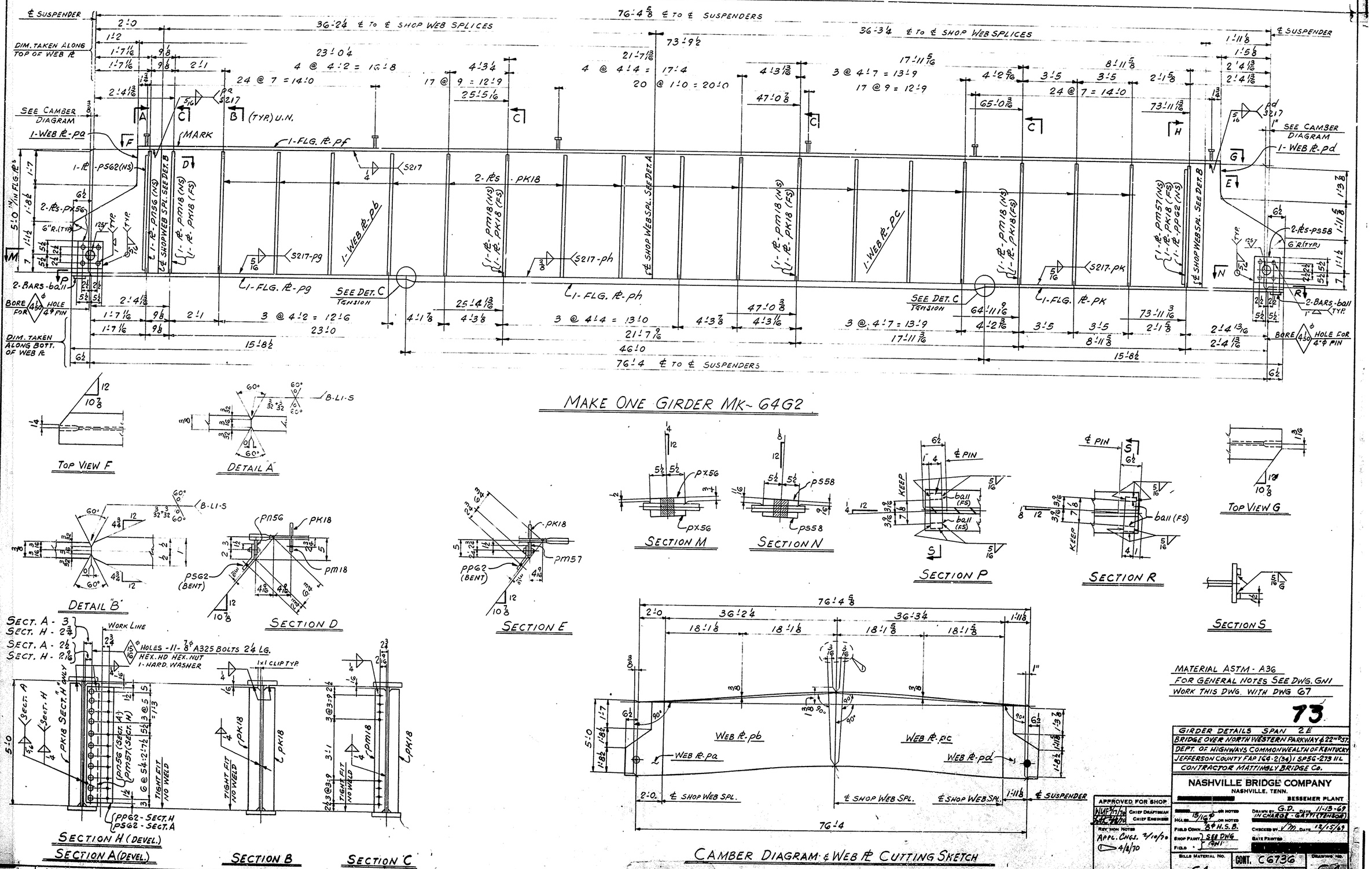

MAKE ONE GIRDER MK-64G2

MATERIAL ASTM - A36
FOR GENERAL NOTES SEE DWG. GN1
WORK THIS DWG. WITH DWG G7

73

GIRDER DETAILS SPAN 2E
BRIDGE OVER NORTH WESTERN PARKWAY & 22ND ST.
DEPT. OF HIGHWAYS COMMONWEALTH OF KENTUCKY
JEFFERSON COUNTY FAP 164-2(34) I SP56-273 I.L.
CONTRACTOR MATTINGLY BRIDGE Co.

NASHVILLE BRIDGE COMPANY
NASHVILLE, TENN.
BESSEMER PLANT

APPROVED FOR SHOP
CHIEF DRAFTSMAN
CHIEF ENGINEER
REVISION NOTES
APPL. CHGS. 2/10/70
4/8/70

DRAWN BY G.D. DATE 11-13-69
IN CHARGE - GATTI (TENSON)
HILB. 15/16 ϕ OR NOTED
ON NOTED
FIELD CONN. 4¾ H.S.B.
SHOP PAINT SEE DWG GN1
FIELD
CHECKED BY DATE 12/15/69
DATE PRINTED

BILLS MATERIAL NO. 64
CONT. C6736
DRAWING NO. G7

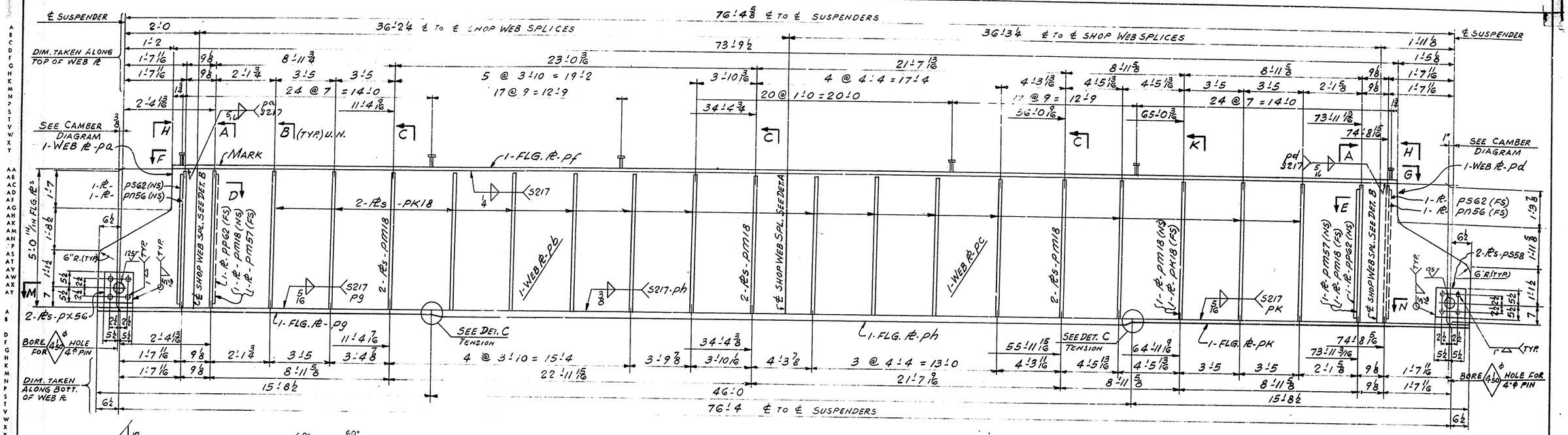

MAKE ONE GIRDER MK-65H2

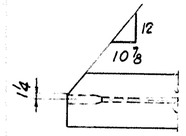

TOP VIEW F

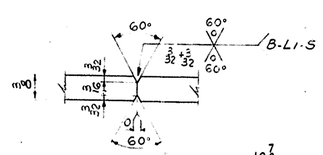

DETAIL A

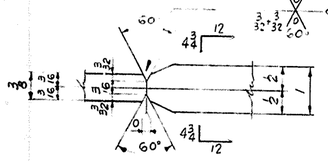

DETAIL B

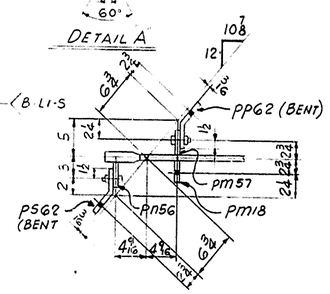

SECTION D

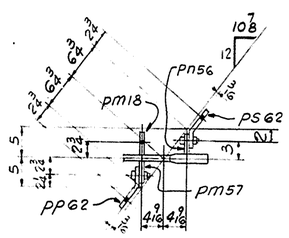

SECTION E

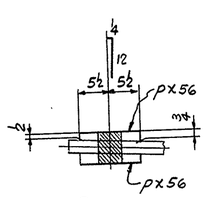

SECTION M

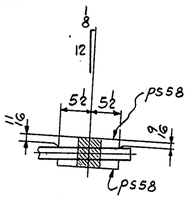

SECTION N

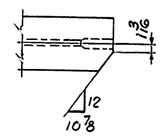

TOP VIEW G

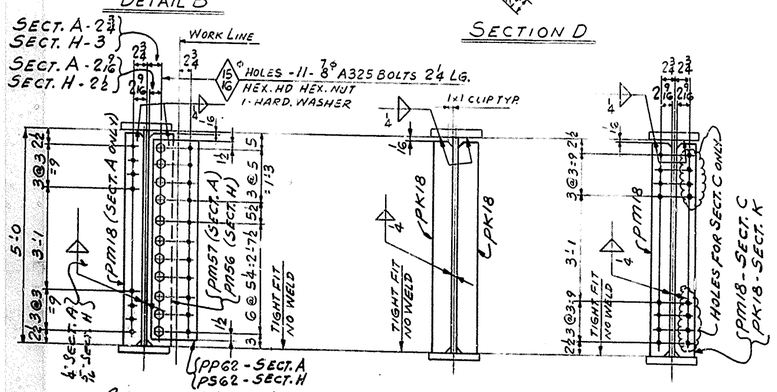

SECTION H (DEVEL.)

SECTION A (DEVEL.)

SECTION B

SECTION C & K

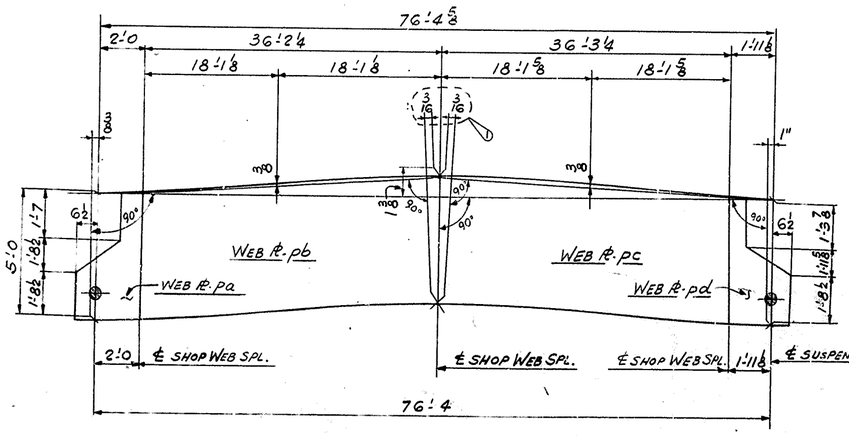

CAMBER DIAGRAM & WEB PL CUTTING SKETCH

MATERIAL ASTM - A36 (U.N.)
FOR GENERAL NOTES SEE DWG. GN1 -
WORK THIS DWG. WITH DIAG. 67

74

GIRDER DETAILS SPAN 2E
BRIDGE OVER NORTH WESTERN PARKWAY & 22ND ST.
DEPT. OF HIGHWAYS COMMONWEALTH OF KENTUCKY
JEFFERSON COUNTY FAP 164-2(34) I SP56-273 I.L.
CONTRACTOR MATTINGLY BRIDGE Co.

NASHVILLE BRIDGE COMPANY
NASHVILLE, TENN.
BESSEMER PLANT

APPROVED FOR SHOP
CHIEF DRAFTSMAN
CHIEF ENGINEER
REVISION NOTES
Appl. Chgs. 2-10-70
4/2/70

HOLES 15/16" ϕ OR NOTED
FIELD CONN. 3/4" ϕ H.S.B.
SHOP PAINT SEE DWG
FIELD GN1

DRAWN BY G.D. DATE 11-13-69
IN CHARGE - GATTI (TENSOR)
CHECKED BY DATE 12/15/65
DATE PRINTED

BILLS MATERIAL NO. G5
CONT. C6736
S.O. B5725
DRAWING NO. 65

B. K. ELLIOTT CO., PGH., PA. REORDER A-4373

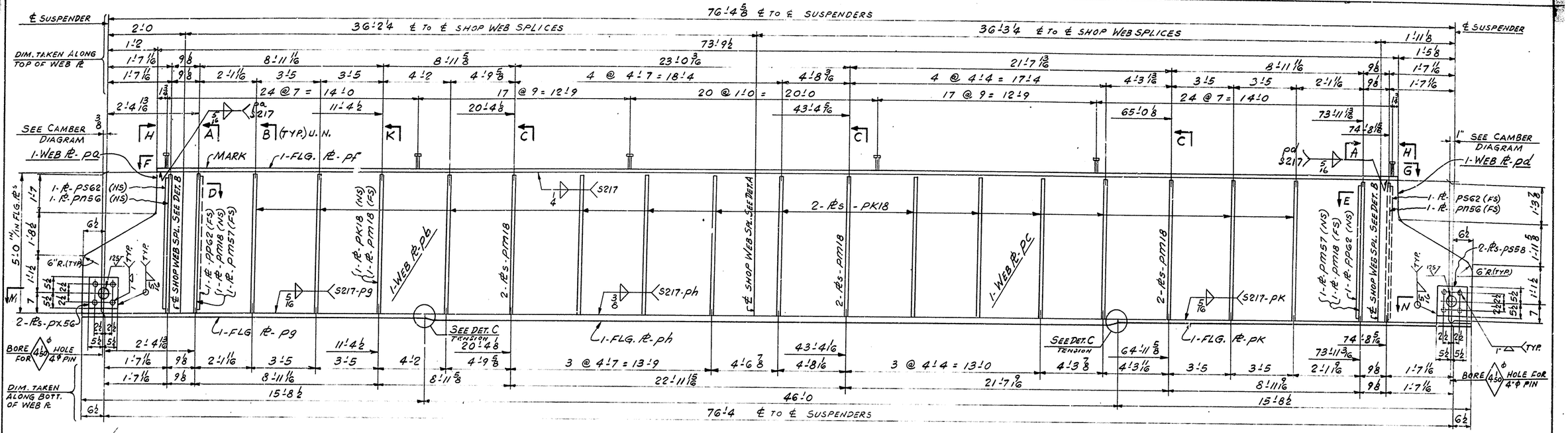

MAKE ONE GIRDER MK-66J2

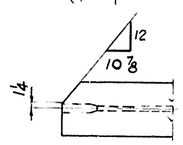

TOP VIEW F

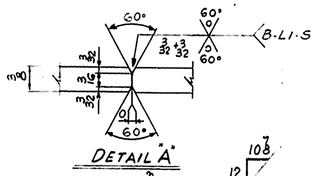

DETAIL "A"

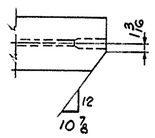

TOP VIEW G

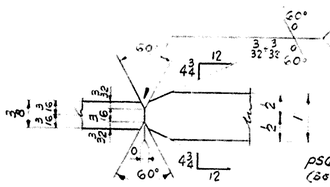

DETAIL B

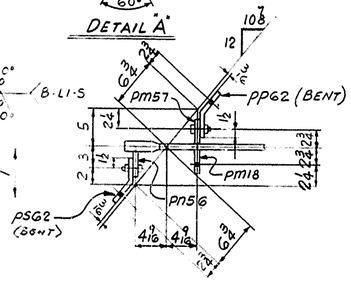

SECTION D

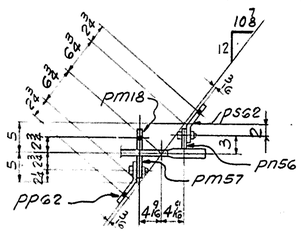

SECTION E

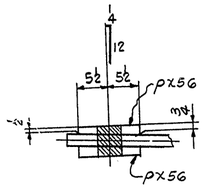

SECTION M

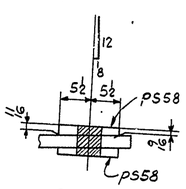

SECTION N

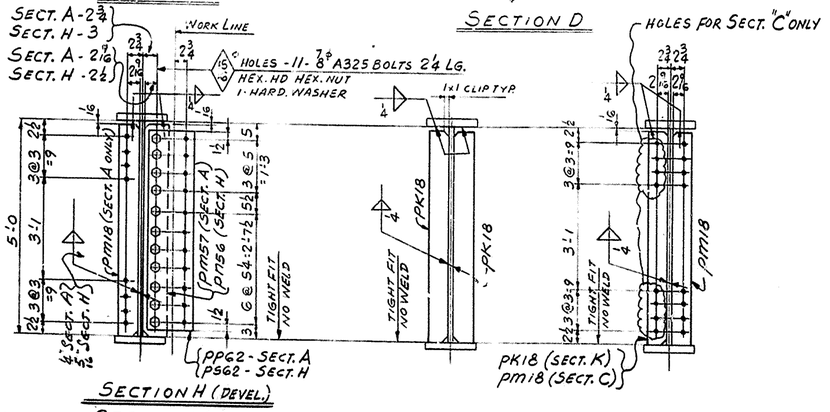

SECTION H (DEVEL.)

SECTION A (DEVEL.)

SECTION B

SECTION C & K

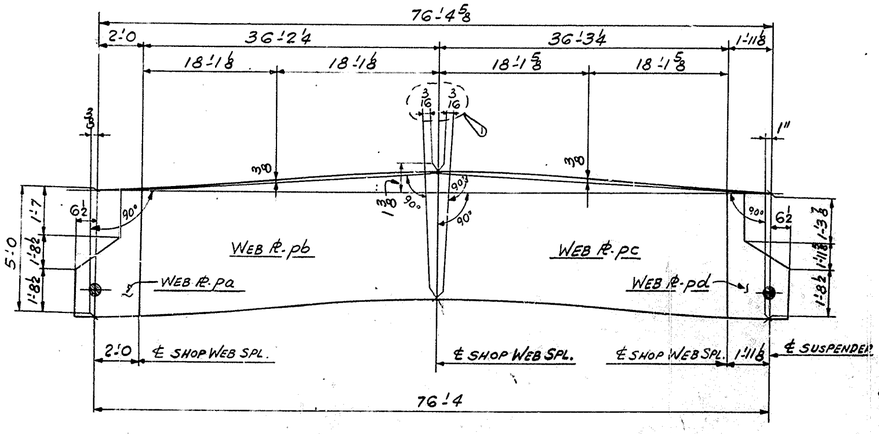

CAMBER DIAGRAM & WEB PL CUTTING SKETCH

MATERIAL ASTM - A36 (U.N.)
FOR GENERAL NOTES SEE DWG. GN1
WORK THIS DWG. WITH DWG. G7

75

GIRDER DETAILS SPAN 2E
BRIDGE OVER NORTH WESTERN PARKWAY & 22ND ST.
DEPT. OF HIGHWAYS COMMONWEALTH OF KENTUCKY
JEFFERSON COUNTY FAP 164-2(34) I SP56-273 11L
CONTRACTOR MATTINGLY BRIDGE Co.

NASHVILLE BRIDGE COMPANY
NASHVILLE, TENN.
BESSEMER PLANT

APPROVED FOR SHOP	
WMF 7/1/70 CHIEF DRAFTSMAN	
HC 7/8/70 CHIEF ENGINEER	
REVISION NOTES	
APPL. CHGS. 7/10/70	
4/2/70	
HOLES 15/16ϕ OR NOTED	DRAWN BY G.D. DATE 11-14-69
FIELD CONN. 8ϕ H.S.B.	IN CHARGE - GATTI (TENSOR)
SHOP PAINT SEE DWG GN1	CHECKED BY VM DATE 12-15-69
FIELD	DATE PRINTED
BILL OF MATERIAL NO. 66	CONT. C6736 S.O. B5725
	DRAWING NO. 66

[redacted]

D. K. ELLIOTT CO., PEN. PA. REORDER A-8373

NASHVILLE BRIDGE COMPANY

SHOP ORDER NO. B5725 | WORK ORDER NO. | CONTRACT NO. C6736

COMMONWEALTH OF KENTUCKY DEPT. OF HIGHWAYS

BRIDGE OVER NORTHWESTERN PARKWAY & 22ND ST. JEFFERSON COUNTY

BILL NO. 64 | DRAWING NO. 64 & 67

FABRICATION BESSEMER PLANT

ITEM | WEIGHTS BY | CHECKED BY

SHOP	SHIPPING MARK	ITEM QUANT	ASSEMBLY MARK	SHAPE	SECTION	FINISHED LENGTH FT	FINISHED LENGTH IN	ORDERED LENGTH FT	ORDERED LENGTH IN	P.O. NO.	ITEM NO.	REMARKS	SPECIF. WEIGHT	A.I.S.C. WEIGHT	
					MATERIAL ASTM-A36 (U.N.)										
ONE	6462				GIRDER										
		1	pa	PL	30 7/8 × 1	5	0			3910	306	PL 6 1/2 × 3/4 G MATCH CUT 1-EA-pa & pb102			5/7
		1	pb	PL	60 3/8 × 3/8	36	2 5/8	61 1/2 × 36 1/4		3908	427				6/7
		1	pc	PL	60 3/8 × 3/8	36	3 1/4	61 1/2 × 36 1/4		3908	427				6/7
		1	pd	PL	30 5/8 × 1	5	0			3910	306	PL 6 1/2 × 3/4 G MATCH CUT 1-EA-pd & pb69			6/2
		1	pf	PL	12 × 9/16	73	9 1/2	73 1/2 × 74 1/2 CUTS G		3910	329				6/15
		1	pg	PL	12 × 1	15	8 1/2	85 1/2 CUTS 7812		3910	302				6/23
		1	ph	PL	12 × 1 15/16	46	0	49 1/2 × 46 1/2 CUTS 4		3910	214				6/18
		1	pk	PL	12 × 1	15	8 1/2	85 1/2 CUTS 7812		3910	302				6/23
		1	ps62	PL	7 5/8 × 3/8	4	7			STK 3372	528	BENT			6/29
		1	pn56	PL	4 × 3/8	4	11 15/16			3905	605	(FIE)			6/27
		1	pm57	PL	4 × 3/8	4	11 15/16					(FIE)			6/27
		4	pm18	PL	4 × 3/8	4	11 15/16					(FIE)			6/27
		33	pk18	PL	4 × 3/8	4	11 15/16			3905	605	(FIE)			6/27
		4	ba11	BAR	1 1/2 × 1	0	4			3910	385				6/30
		2	px56	PL	11 × 3/4 × 1/2	0	11			STK 2674	316	BEV.			6/24
		2	ps58	PL	11 × 1/16 × 9/16	0	11			STK 2674	316	BEV. FIN. 3/4 PL			6/34
		1	pp62	PL	7 7/8 × 3/8	4	7			STK 3372	528	BENT			6/29
		412			3/4 ϕ STUDS	0	4			27/20	301	AUTO. END WELDED			
		22			7/8 ϕ BOLTS	0	2 4			24661	202	(A325) HEX. HD. HEX. NUT			
		22			HARD. WASHERS FOR 7/8 ϕ BOLTS					203		(A325)			

SHEET TOTAL

NASHVILLE BRIDGE COMPANY

SHOP ORDER NO. B5725 | WORK ORDER NO. | CONTRACT NO. C6736

COMMONWEALTH OF KENTUCKY DEPT. OF HIGHWAYS

BRIDGE OVER NORTH WESTERN PARKWAY & 22ND ST. JEFFERSON COUNTY

BILL NO. 65 | DRAWING NO. 65 & 67

FABRICATION BESSEMER PLANT

ITEM | WEIGHTS BY | CHECKED BY

SHOP	SHIPPING MARK	ITEM QUANT	ASSEMBLY MARK	SHAPE	SECTION	FINISHED LENGTH FT	FINISHED LENGTH IN	ORDERED LENGTH FT	ORDERED LENGTH IN	P.O. NO.	ITEM NO.	REMARKS	SPECIF. WEIGHT	A.I.S.C. WEIGHT	
					MATERIAL ASTM-A36 (U.N.)										
ONE	G5H2				GIRDER										
		1	pa	PL	30 7/8 × 1	5	0			3910	306	PL 6 1/2 × 3/4 G MATCH CUT 1-EA-pa & pc102			5/7
		1	pb	PL	60 3/8 × 3/8	36	2 5/8	61 1/2 × 36 1/4		3908	427				6/7
		1	pc	PL	60 3/8 × 3/8	36	3 1/4	61 1/2 × 36 1/4		3908	427				6/7
		1	pd	PL	30 5/8 × 1	5	0			3910	306	PL 6 1/2 × 3/4 G MATCH CUT 1-EA-pd & pb67			6/2
		1	pf	PL	12 × 9/16	73	9 1/2	73 1/2 × 74 1/2 CUTS G		3910	329				6/15
		1	pg	PL	12 × 1	15	8 1/2	85 1/2 CUTS 7812		3910	302				6/23
		1	ph	PL	12 × 1 15/16	46	0	49 1/2 × 46 1/2 CUTS 4		3910	214				6/18
		1	pk	PL	12 × 1	15	8 1/2	85 1/2 CUTS 7812		3910	302				6/23
		2	ps62	PL	7 5/8 × 3/8	4	7			STK 3372	528	(BENT)			6/29
		2	pn56	PL	4 × 3/8	4	11 15/16			3905	605	(FIE)			6/27
		2	pm57	PL	4 × 3/8	4	11 15/16								
		9	pm18	PL	4 × 3/8	4	11 15/16								
		29	pk18	PL	4 × 3/8	4	11 15/16			3905	605	(FIE)			6/27
		2	px56	PL	11 × 3/4 × 1/2	0	11			STK 2674	316	BEV.			6/24
		2	ps58	PL	11 × 1/16 × 9/16	0	11			STK 2674	316	BEV. FIN. 3/4 PL			6/34
		2	pp62	PL	7 7/8 × 3/8	4	7			STK 3372	528	(BENT)			6/29
		412			3/4 ϕ STUDS	0	4			27/20	301	AUTO. END WELDED			
		44			7/8 ϕ BOLTS	0	2 4			24661	202	(A325) HEX. HD. HEX. NUT			
		44			HARD. WASHERS FOR 7/8 ϕ BOLTS					203		(A325)			

SHEET TOTAL

NASHVILLE BRIDGE COMPANY

SHOP ORDER NO. B5725 | WORK ORDER NO. | CONTRACT NO. C6736

COMMONWEALTH OF KENTUCKY DEPT. OF HIGHWAYS

BRIDGE OVER NORTHWESTERN PARKWAY & 22ND ST. JEFFERSON CO.

BILL NO. 66 | DRAWING NO. 66 & 67

FABRICATION BESSEMER PLANT

ITEM | WEIGHTS BY | CHECKED BY

SHOP	SHIPPING MARK	ITEM QUANT	ASSEMBLY MARK	SHAPE	SECTION	FINISHED LENGTH FT	FINISHED LENGTH IN	ORDERED LENGTH FT	ORDERED LENGTH IN	P.O. NO.	ITEM NO.	REMARKS	SPECIF. WEIGHT	A.I.S.C. WEIGHT	
					MATERIAL ASTM-A36 (U.N.)										
ONE	6G32				GIRDER										
		1	pa	PL	30 7/8 × 1	5	0			3910	306	PL 6 1/2 × 3/4 G MATCH CUT 1-EA-pa & pd99			5/7
		1	pb	PL	60 3/8 × 3/8	36	2 5/8	61 1/2 × 36 1/4		3908	427				6/7
		1	pc	PL	60 3/8 × 3/8	36	3 1/4	61 1/2 × 36 1/4		3908	427				6/7
		1	pd	PL	30 5/8 × 1	5	0			3910	306	PL 6 1/2 × 3/4 G MATCH CUT 1-EA pd & pb66			6/2
		1	pf	PL	12 × 9/16	73	9 1/2	73 1/2 × 74 1/2 CUTS G		3910	329				6/15
		1	pg	PL	12 × 1	15	8 1/2	85 1/2 CUTS 7812		3910	302				6/23
		1	ph	PL	12 × 1 1/16	46	0	49 1/2 × 46 1/2 CUTS 4		3910	214				6/18
		1	pk	PL	12 × 1	15	8 1/2	85 1/2 CUTS 7812		3910	302				6/23
		2	pp62	PL	7 7/8 × 3/8	4	7			STK 3372	528	(BENT)			6/29
		2	pn56	PL	4 × 3/8	4	11 15/16			3905	605	(FIE)			6/27
		2	pm57	PL	4 × 3/8	4	11 15/16								
		9	pm18	PL	4 × 3/8	4	11 15/16								
		27	pk18	PL	4 × 3/8	4	11 15/16			3905	605	(FIE)			6/27
		2	px56	PL	11 × 3/4 × 1/2	0	11			STK 2674	316	BEV.			6/24
		2	ps58	PL	11 × 1/16 × 9/16	0	11			STK 2674	316	BEV. FIN. 3/4 PL			6/34
		2	pp62	PL	7 5/8 × 3/8	4	7			STK 3372	528	(BENT)			6/29
		412			3/4 ϕ STUDS	0	4			27/20	301	AUTO. END WELDED			
		44			7/8 ϕ BOLTS	0	2 4			24661	202	(A325) HEX. HD. HEX. NUT			
		44			HARD. WASHERS FOR 3/4 ϕ BOLTS					203		(A325)			

SHEET TOTAL

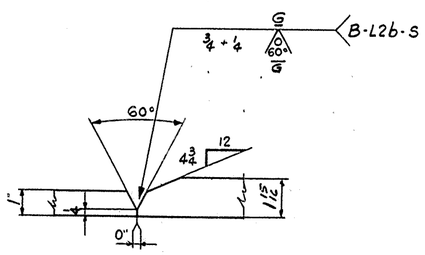

DETAIL "C"

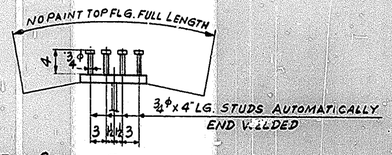

TYP. SECTION THRU TOP FLG.

WORK THIS DWG WITH DWGS. 64, 65, 66

FOR GENERAL NOTES SEE DWG GN1

MATL ASTM A36 (UN)

76

GIRDER DETAILS SPAN 2E

BRIDGE OVER NORTHWESTERN PARKWAY & 22ND ST.

DEPT. OF HIGHWAYS COMMONWEALTH OF KENTUCKY

JEFFERSON COUNTY FAP 164-2(34) I SP 56-233-112

CONTRACTOR MATTINGLY BRIDGE CO.

NASHVILLE BRIDGE COMPANY
NASHVILLE, TENN.
BESSEMER PLANT

APPROVED FOR SHOP: CHIEF DRAFTSMAN / CHIEF ENGINEER

REVISION NOTES: Amd. Chgs. 3/10/70

SCALE: 5/16 ϕ OR NOTED | DRAWN BY: G.D. DATE: 11-14-69 | IN CHARGE: BATT

FIELD CONN.: 7/8 H.S.B. | CHECKED BY: DATE: 12/15/69

SHOP PAINT: SEE GN1 | DATE PRINTED:

FILLS:

BILLS MATERIAL NO.: 64, 65, 66 | CONT. C6736 | S.O. B5725 | DRAWING NO. 67

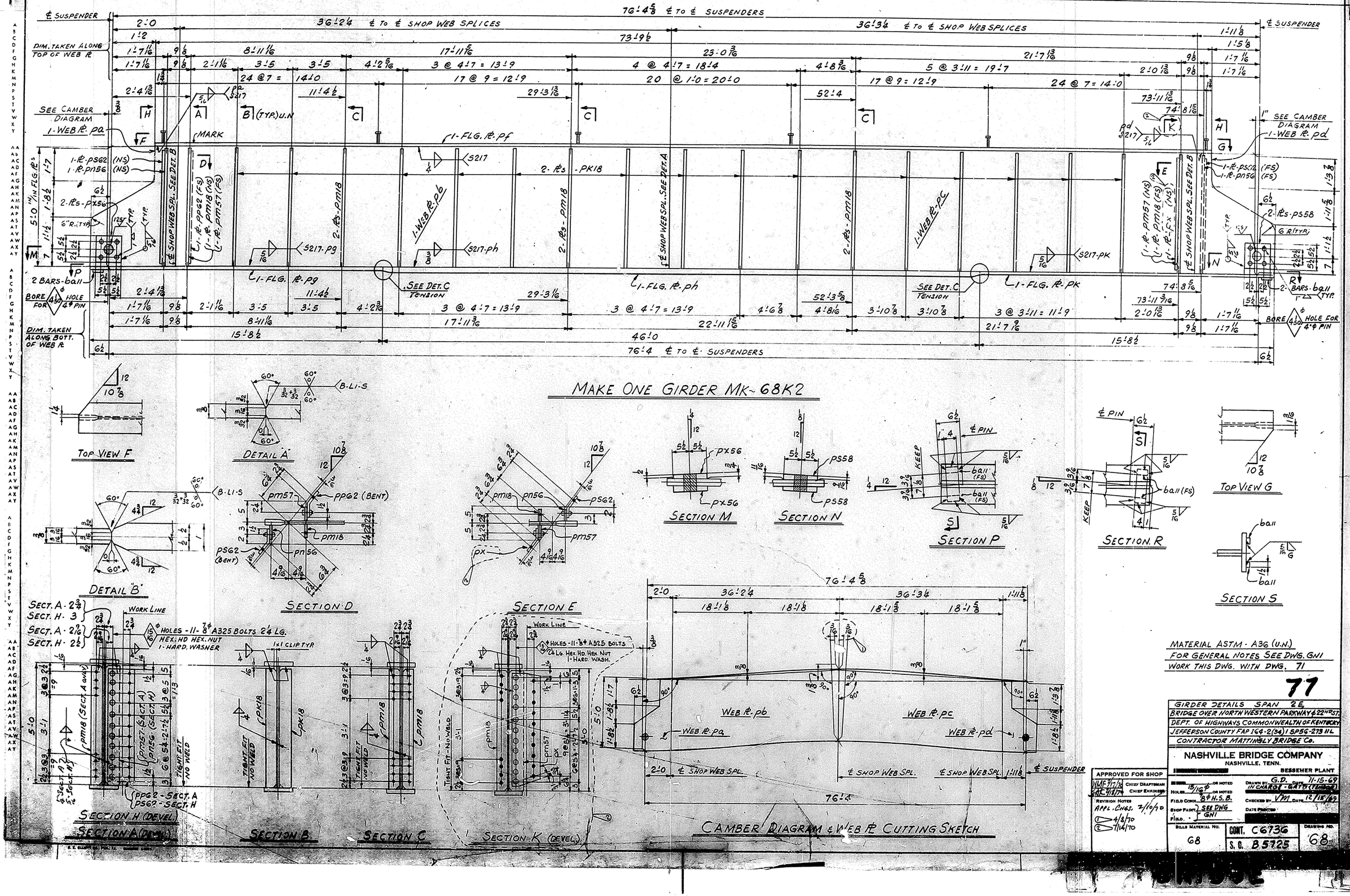

MATERIAL ASTM - A36 (U.N.)
FOR GENERAL NOTES SEE DWG. GN1
WORK THIS DWG. WITH DWG. 71

77

GIRDER DETAILS SPAN 2E
BRIDGE OVER NORTH WESTERN PARKWAY & 22ND ST.
DEPT. OF HIGHWAYS COMMONWEALTH OF KENTUCKY
JEFFERSON COUNTY FAP 164-2(34) I SP56-273 IL
CONTRACTOR MATTINGLY BRIDGE Co.

NASHVILLE BRIDGE COMPANY
NASHVILLE, TENN.
BESSEMER PLANT

APPROVED FOR SHOP
WMF 11/1/68 CHIEF DRAFTSMAN
JEC 4/18/74 CHIEF ENGINEER
REVISION NOTES
APPL. CHGS. 7/10/70
1 4/8/70
2 7/14/70

HOLES 15/16" OR NOTED
FIELD CONN. 8" H.S.B.
SHOP PAINT SEE DWG GN1
FIELD
DRAWN BY G.D. DATE 11-15-69
IN CHARGE
CHECKED BY VM DATE 12/15/69
DATE PRINTED

BILL MATERIAL NO. 68
CONT. C6736
S.O. B5725
DRAWING NO. 68

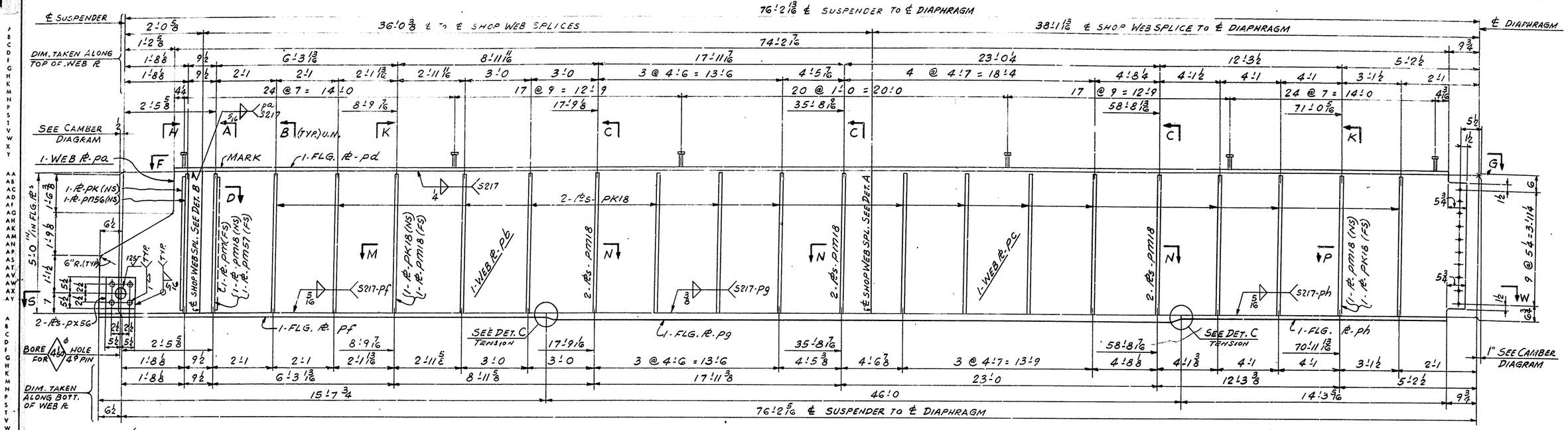

MAKE ONE GIRDER MK-69K2

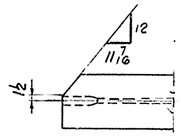

TOP VIEW F

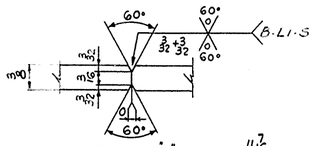

DETAIL A

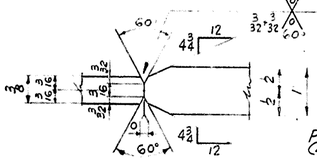

DETAIL B

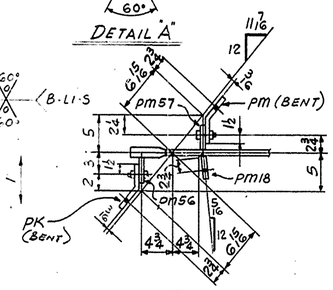

SECTION D

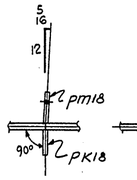

SECT. M

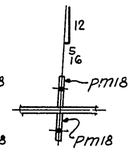

SECT. N

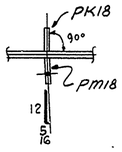

SECT. P

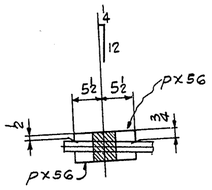

SECTION S

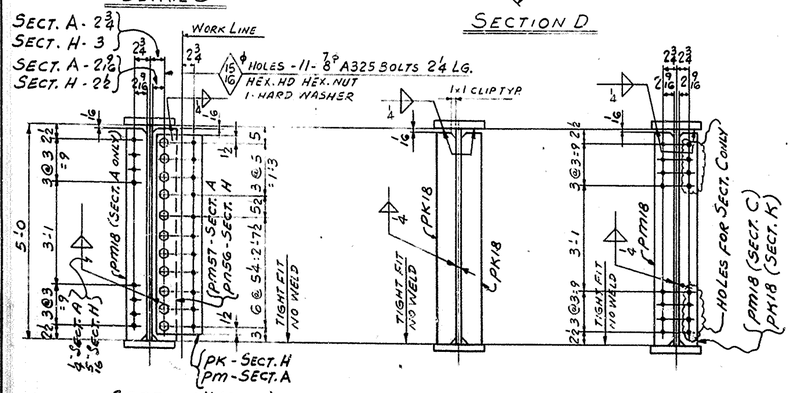

SECTION H (DEVEL.)
SECTION A (DEVEL.)
SECTION B
SECTION C & K

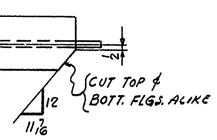

VIEW G (AS SHOWN)
SECTION W (SIMILAR)

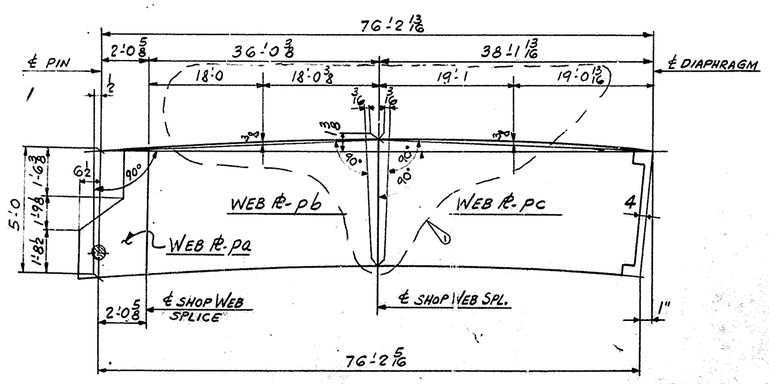

CAMBER DIAGRAM & WEB PL CUTTING SKETCH

MATERIAL ASTM - A36 (U.N.)
FOR GENERAL NOTES SEE DWG. GN1
WORK THIS DWG. WITH DWG. 71

78

GIRDER DETAILS SPAN 2E
BRIDGE OVER NORTH WESTERN PARKWAY & 22ND ST.
DEPT. OF HIGHWAYS COMMONWEALTH OF KENTUCKY
JEFFERSON COUNTY FAP 164-2(34) I SP56-273 ILL.
CONTRACTOR MATTINGLY BRIDGE CO.

NASHVILLE BRIDGE COMPANY
NASHVILLE, TENN.
BESSEMER PLANT

APPROVED FOR SHOP
Chief Draftsman
Chief Engineer
Revision Notes
APPR. C.H.G. 2/10/70
4/8/70

HOLES 15/16" ϕ OR NOTED
FIELD CONN. 8 ϕ H.S.B. OR NOTED
SHOP PAINT SEE DWG GN1
FIELD
BILLS MATERIAL NO. 69

DRAWN BY G.D. DATE 11-17-69
IN CHARGE GATTI (TENSON)
CHECKED BY DATE 12/12/69
DATE PRINTED

CONT. C6736
S.O. B5725
DRAWING NO. 69

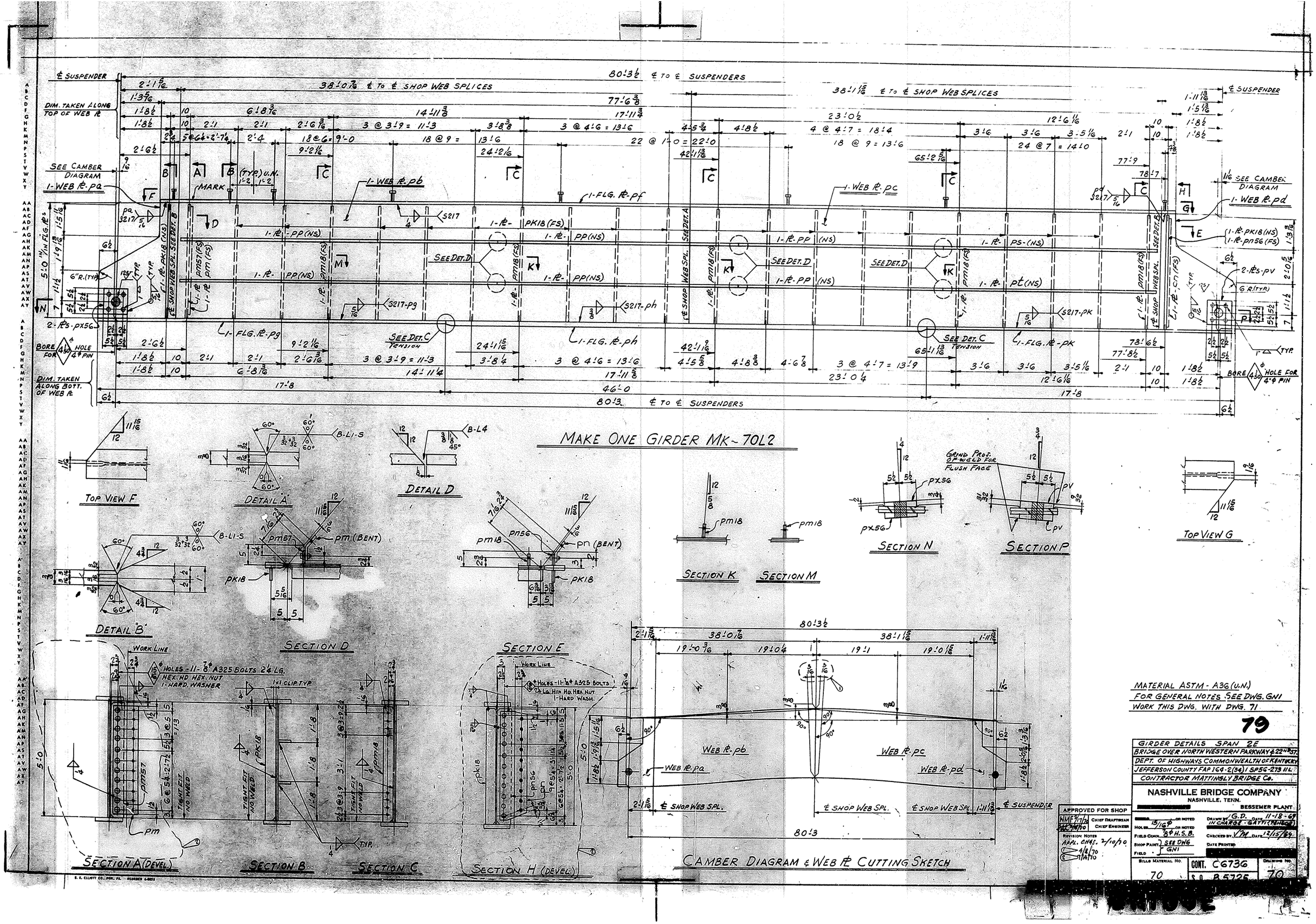
MAKE ONE GIRDER MK-70L2
TOP VIEW F
DETAIL A
DETAIL D
TOP VIEW G
DETAIL "B"
SECTION D
SECTION E
SECTION K
SECTION M
SECTION N
SECTION P
SECTION A (DEVEL.)
SECTION B
SECTION C
SECTION H (DEVEL.)
CAMBER DIAGRAM & WEB PL CUTTING SKETCH
MATERIAL ASTM - A36 (U.N.)
FOR GENERAL NOTES SEE DWG. GN1
WORK THIS DWG. WITH DWG. 71
79
GIRDER DETAILS SPAN 2E
BRIDGE OVER NORTH WESTERN PARKWAY & 22nd ST.
DEPT. OF HIGHWAYS COMMONWEALTH OF KENTUCKY
JEFFERSON COUNTY FAP 164-2(34) I SP56-273 ILL.
CONTRACTOR MATTINGLY BRIDGE CO.
NASHVILLE BRIDGE COMPANY
NASHVILLE, TENN.
BESSEMER PLANT
APPROVED FOR SHOP
CHIEF DRAFTSMAN
CHIEF ENGINEER
REVISION NOTES
DRAWN BY G.D. DATE 11-18-69
IN CHARGE - GATTI (MANAGER)
CHECKED BY DATE 12/15/69
DATE PRINTED
BILLS MATERIAL NO. 70
CONT. C6736
DRAWING NO. 70

NASHVILLE BRIDGE COMPANY

SHOP ORDER NO. B5725 | WORK ORDER NO. | CONTRACT NO. C6736 | BILL NO. 68 | DRAWING NO. 68 & 71

COMMONWEALTH OF KENTUCKY DEPT. OF HIGHWAYS

BRIDGE OVER NORTHWESTERN PARKWAY & 22ND ST. JEFFERSON COUNTY

FABRICATION BESSEMER PLANT

ITEM | WEIGHTS BY | CHECKED BY

SHIP	SHIPPING MARK	ITEM COUNT	ASSEMBLY MARK	MARK	SECTION	FINISHED LENGTH FT IN	ORDERED LENGTH FT IN	P.O. NO.	ITEM NO.	REMARKS	SPECIF. WEIGHT	A.I.S.C. WEIGHT	
					MATERIAL ASTM-A36 (U.N.)								
ONE	68K2				GIRDER								
		1	pa	PL	30 7/8 x 1	5 0		3910	306	PL 61 x 3'-6 MATCH CUT 1 EA. pa & pc150			5/7
		1	pb	PL	60 3/8 x 3/8	36 2 3/8	61½ x 36'-6	3908	427				6/7
		1	pc	PL	60 3/8 x 3/8	36 3 1/4	61½ x 36'-6	3908	427				6/7
		1	pd	PL	30 3/8 x 1	5 0		3910	306	PL 61 x 3'-6 MATCH CUT 1 EA. pd & pb46			6/2
		1	pf	PL	12 x 9/16	73 9½	73½ x 74'-0 CUTS 6	3910	309				6/16
		1	pg	PL	12 x 1	15 8½	86½ CUTS 7@2	3910	302				6/23
		1	ph	PL	12 x 11/16	46 0	49½ x 46'-0 CUTS 4	3910	214				6/18
		1	pk	PL	12 x 1	15 8½	86½ CUTS 7@12	3910	302				6/23
		One	pp62	PL	7 7/8 x 3/8	4 7		STK 3372	528	BENT			6/29
		2	ps62	PL	7 5/8 x 3/8	4 7		STK 3372	605	BENT			6/29
		2	pm57	PL	4 x 3/8	4 11 15/16		3905	605	(FIE)			6/27
		2	pn56	PL	4 x 3/8	4 11 15/16							
		8	pm18	PL	4 x 3/8	4 11 15/16							
		28	pk18	PL	4 x 3/8	4 11 15/16		3905	605	(FIE)			6/27
		4	ba11	BAR	1 x 1	0 4		3910	325				6/30
		2	px56	PL	11 x 3/4 x 2	0 11		STK 2674	316	(BEV.)			6/34
		2	pv55	PL	11 x 1/16 x 9/16	0 11		STK 2674	316	(BEV) FIN. 3/4 PL			6/34
		One	px	PL	7 7/8 x 3/8	4 7		STK 3372	528	BENT			
		412			3/4 ϕ STUDS	0 4		27130	301	AUTO. END WELDED			
		44			7/8 ϕ BOLTS	0 2 4		2666	202	(A325) HEX HD HEX NUT			
		44			HARD WASHERS FOR 7/8 ϕ BOLTS				203	(A325)			

SHEET TOTAL

NASHVILLE BRIDGE COMPANY

SHOP ORDER NO. B5725 | WORK ORDER NO. | CONTRACT NO. C6736 | BILL NO. 69 | DRAWING NO. 69 & 71

COMMONWEALTH OF KENTUCKY DEPT. OF HIGHWAYS

BRIDGE OVER NORTHWESTERN PARKWAY & 22ND ST. JEFFERSON COUNTY

FABRICATION BESSEMER PLANT

ITEM | WEIGHTS BY | CHECKED BY

SHIP	SHIPPING MARK	ITEM COUNT	ASSEMBLY MARK	MARK	SECTION	FINISHED LENGTH FT IN	ORDERED LENGTH FT IN	P.O. NO.	ITEM NO.	REMARKS	SPECIF. WEIGHT	A.I.S.C. WEIGHT	
					MATERIAL ASTM-A36 (U.N.)								
ONE	69K2				GIRDER								
		1	pa	PL	31 5/8 x 1	5 0		3910	306	PL 61 x 3'-6 MATCH CUT 1 EA. pa & pc152			5/7
		1	pb	PL	60 3/8 x 3/8	36 0 5/8	61½ x 36'-6	3908	427				6/9
		1	pc	PL	60 3/8 x 3/8	37 9 5/8	61½ x 37'-4	3908	424				6/8
		1	pd	PL	12 x 9/16	74 2 1/2	73½ CUTS 6@12	3910	328				6/17
		1	pf	PL	12 x 1	15 7 3/4	86½ CUTS 7@12	3910	303				6/25
		1	pg	PL	12 x 11/16	46 0	49½ x 46'-0 CUTS 4	3910	214				6/18
		1	ph	PL	12 x 1	14 3 5/8	86½ CUTS 7@2	3910	303				6/25
		1	pk	PL	7 7/8 x 3/8	4 7		STK 3372	528	BENT			6/29
		1	pm	PL	7 7/8 x 3/8	4 7		STK 3372	528	BENT			6/29
		1	pm57	PL	4 x 3/8	4 11 15/16		3905	605	(FIE)			6/27
		1	pn56	PL	4 x 3/8	4 11 15/16							
		9	pm18	PL	4 x 3/8	4 11 15/16							
		30	pk18	PL	4 x 3/8	4 11 15/16		3905	605	(FIE)			6/27
		2	px56	PL	11 x 3/4 x 2	0 11		STK 2674	316	(BEV.)			6/34
		412			3/4 ϕ STUDS	0 4		27130	301	AUTO. END WELDED			
		22			7/8 ϕ BOLTS	0 2 4		2666	202	(A325) HEX HD HEX NUT			
		22			HARD WASHERS FOR 7/8 ϕ BOLTS				203	(A325)			

SHEET TOTAL

NASHVILLE BRIDGE COMPANY

SHOP ORDER NO. B5725 | WORK ORDER NO. | CONTRACT NO. C6736 | BILL NO. 70 | DRAWING NO. 70 & 71

COMMONWEALTH OF KENTUCKY DEPT. OF HIGHWAYS

BRIDGE OVER NORTHWESTERN PARKWAY & 22ND ST. JEFFERSON CO.

FABRICATION BESSEMER PLANT

ITEM | WEIGHTS BY | CHECKED BY

SHIP	SHIPPING MARK	ITEM COUNT	ASSEMBLY MARK	MARK	SECTION	FINISHED LENGTH FT IN	ORDERED LENGTH FT IN	P.O. NO.	ITEM NO.	REMARKS	SPECIF. WEIGHT	A.I.S.C. WEIGHT	
					MATERIAL ASTM-A36 (U.N.)								
ONE	70L2				GIRDER								
		1	pa	PL	32 3/8 x 1	5 0		3910	306	PL 61 x 3'-6 MATCH CUT 1 EA. pa & pc149			5/7
		1	pb	PL	60 3/8 x 3/8	38 1	61½ x 38'-4	3908	424				6/8
		1	pc	PL	60 3/8 x 3/8	38 11/16	61½ x 38'-4	3908	424				6/8
		1	pd	PL	31 3/8 x 1	5 0		3910	306	PL 61 x 3'-6 MATCH CUT 1 EA. pd & pb45			6/2
		1	pf	PL	12 x 9/16	77 6 3/4	78½ CUTS 6@12	3910	328				6/16
		1	pg	PL	12 x 1	17 8		3910	305				6/24
		1	ph	PL	12 x 11/16	46 0	49½ x 46'-0 CUTS 4	3910	214				6/18
		1	pk	PL	12 x 1	17 8		3910	305				6/24
		1	pm	PL	7 7/8 x 3/8	4 7		STK 3372	528	(BENT)			6/29
		1	pn	PL	7 5/8 x 3/8	4 7		STK 3372	528	(BENT)			6/29
		1	pn56	PL	4 x 3/8	4 11 15/16		3905	605	(FIE)			6/27
		1	pm57	PL	4 x 3/8	4 11 15/16							
		5	pm18	PL	4 x 3/8	4 11 15/16							
		17	pk18	PL	4 x 3/8	4 11 15/16		3905	605	(FIE)			6/27
		6	pp	PL	4 x 3/8	20 0			605				6/22
		1	ps	PL	4 x 3/8	16 0 3/8			605				6/22
		1	pt	PL	4 x 3/8	16 0 3/8		3905	605				6/22
		2	px56	PL	11 x 3/4 x 1/2	0 11		STK 2674	316	BEV.			6/34
		2	pv	PL	11 x 3/32 x 3/2	0 11		3910	303	BEV. FIN. 1 PL			6/33
		428			3/4 ϕ STUDS	0 4		27130	301	AUTO. END WELDED			
		22			7/8 ϕ BOLTS	0 2 4		2666	202	(A325) HEX HD HEX NUT			
		22			HARD WASHERS FOR 7/8 ϕ BOLTS				203	(A325)			

SHEET TOTAL

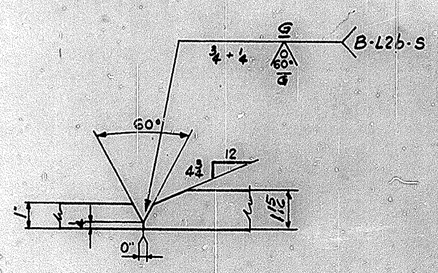

DETAIL "C"

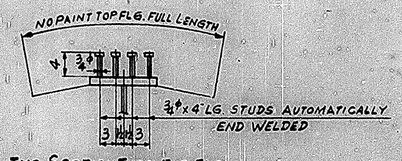

TYP. SECTION THRU TOP FLG.

80

WORK THIS DWG WITH DWGS. 68, 69, 70

FOR GENERAL NOTES SEE DWG GN1

MATL. ASTM A36 (UN)

APPROVED FOR SHOP

NMF 7/7/70 CHIEF DRAFTSMAN

JAC 7/8/70 CHIEF ENGINEER

REVISION NOTES

APPL. CHGE. 7/14/70

GIRDER DETAILS SPAN 2E

BRIDGE OVER NORTH WESTERN PARKWAY & 22ND ST.

DEPT. OF HIGHWAYS COMMONWEALTH OF KENTUCKY

JEFFERSON COUNTY FAP 16A-2(34) I SP56-273-114

CONTRACTOR MATTINGLY BRIDGE CO.

NASHVILLE BRIDGE COMPANY

NASHVILLE, TENN. BESSEMER PLANT

SCALE | HOR. 5/16" ϕ OR NOTED | VERT. OR NOTED | FIELD CONN. 3/8" H.S.B. | SHOP PAINT SEE GN1 | FIELD

DRAWN BY G.D. DATE 11-4-69 IN CHARGE MATT. DATE

CHECKED BY VM DATE 12/15/69

DATE PRINTED

BILLS MATERIAL NO. 68, 69, 70 | CONT. C6736 | S.O. B5725 | DRAWING NO. 71

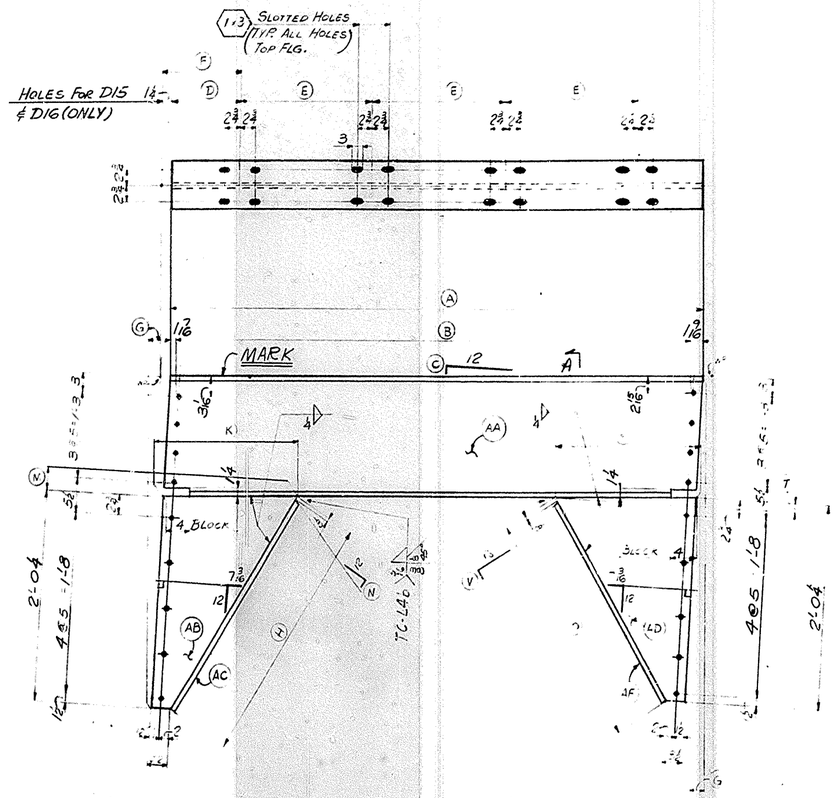

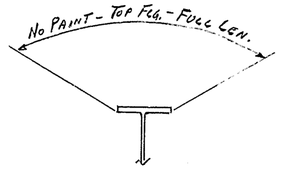

SECT. A

DIAPHRAGMS MK 72D13 TO 72D16 (INCL.)
(SEE TABLE FOR DIM.)

MARK	NO. REQ'D	A	B	C	D	E	F	G	H	K	M	N	P	S	T	V	AA	AB	AC	AD	AF
72D13	ONE	17'-1 1/16	16'-10 1/16	3/16				13/16	2'-4 11/16	1'-6 1/4	5/16	2 3/4	2'-3 15/16	1'-5 7/8	5/16	3 3/16	wa	pa	ba	pb	bb
72D14	ONE	17'-1 1/16	16'-10 1/16	3/16				11/16	2'-4 5/8	1'-6 4	4	2 3/4	2'-4	1'-5 15/16	4	3 3/16	wb	pc	bc	pd	bd
72D15	ONE	11'-6 7/16	11'-3 7/16	8	11 7/16	3'-2 1/2	1'-0 11/16	6	2'-4 1/2	1'-6 3/16	3/16	2 7/8	2'-4 1/8	1'-6	3/16	3 1/8	wc	pf	bf	pg	bg
72D16	ONE	11'-6 7/16	11'-3 7/16	8	11 7/16	3'-2 1/2	1'-0 11/16	6	2'-4 9/16	1'-6 3/16	4	2 13/16	2'-4 1/16	1'-5 15/16	4	3 3/16	wd	ph	bh	pk	bk

NASHVILLE BRIDGE COMPANY

SHOP ORDER NO. B-5726 | WORK ORDER NO. | CONTRACT NO. C-6736 | ITEM

COMMONWEALTH OF KENTUCKY, DEPT. OF HIGHWAYS, BRIDGE
OVER NORTHWESTERN PKWY & 22ND ST., JEFFERSON COUNTY

FABRICATION BESSEMER PLANT

BILL NO. 72 | DRAWING NO. 72

SHIP	SHIPPING MARK	ITEM NO.	ASSEMBLY MARK	SECTION	FINISHED LENGTH	WEIGHT EACH	NO. REQ'D	REMARKS	PILOT	A.S.C. REMARK
				MAT'L ASTM A36						
ONE 72D13				DIAPHRAGM						
		1	wa	WF 21WF55	17 1 1/8		3904 104			
		1	pa	PL 18 1/4 x 3/8	2 0 1/16		STK 3740 410	PL 25x1'-10 CUTS 2		
		1	ba	BR 4 x 3/8	2 4 1/16		3905 605			
		1	pb	PL 17 7/8 x 3/8	2 0 1/4		STK 3740 410	PL 25x1'-10 CUTS 2		
		1	bb	BR 4 x 3/8	2 3 13/16		3905 605			
ONE 72D14				DIAPHRAGM						
		1	wb	WF 21WF55	17 1 1/8		3904 104			
		1	pc	PL 18 1/4 x 3/8	2 0 1/4		STK 3740 410	PL 25x1'-10 CUTS 2		
		1	bc	BR 4 x 3/8	2 4 1/2		3905 605			
		1	pd	PL 17 15/16 x 3/8	2 0 1/4		STK 3740 410	PL 25x1'-10 CUTS 2		
		1	bd	BR 4 x 3/8	2 3 3/8		3905 605			
ONE 72D15				DIAPHRAGM						
		1	wc	WF 21WF55	11 6 7/16		3904 102			
		1	pf	PL 18 3/16 x 3/8	2 0 1/16		STK 3740 410	PL 25x1'-10 CUTS 2		
		1	bf	BR 4 x 3/8	2 4 1/8		3905 605			
		1	pg	PL 18 x 3/8	2 0 1/4		STK 3740 410	PL 25x1'-10 CUTS 2		
		1	bg	BR 4 x 3/8	2 4		3905 605			
ONE 72D16				DIAPHRAGM						
		1	wd	WF 21WF55	11 6 7/16		3904 102			
		1	ph	PL 18 3/16 x 3/8	2 0 1/4		STK 3740 410	PL 25x1'-10 CUTS 2		
		1	bh	BR 4 x 3/8	2 4 1/16		3905 605			
		1	pk	PL 17 15/16 x 3/8	2 0 1/4		STK 3740 410	PL 25x1'-10 CUTS 2		
		1	bk	BR 4 x 3/8	2 3 15/16		3905 605			

SHEET TOTAL

81

FOR GENERAL NOTES SEE DWG GN1
MAT'L ASTM A36

APPROVED FOR SHOP
NAME 7/8/70 CHIEF DRAFTSMAN
CHIEF ENGINEER
REVISION NOTES
APPR. 7/10/70

DIAPHRAGMS RAMP
BRIDGE OVER NORTHWESTERN PKWY & 22ND ST.
DEPT. OF HIGHWAYS, COMMONWEALTH OF KENTUCKY
JEFFERSON CTY, FAP 7G4-2(36)1, SP5G-273-11L
CONTRACTOR: MATTINGLY BRIDGE CO.

NASHVILLE BRIDGE COMPANY
NASHVILLE, TENN.
BESSEMER PLANT

RIVETS NONE
HOLES 13/16 OR NOTED
FIELD CONN. 7/8" HSB
SHOP PAINT } SEE GN1
FIELD

DRAWN BY FK DATE 11-7-69
IN CHARGE GATT. (7/8/70)
CHECKED BY VM DATE 11/24/69
DATE PRINTED

BILL MATERIAL NO. 72 | CONT. C6736 | DRAWING NO. 72
S.O. B-5726

[redacted]

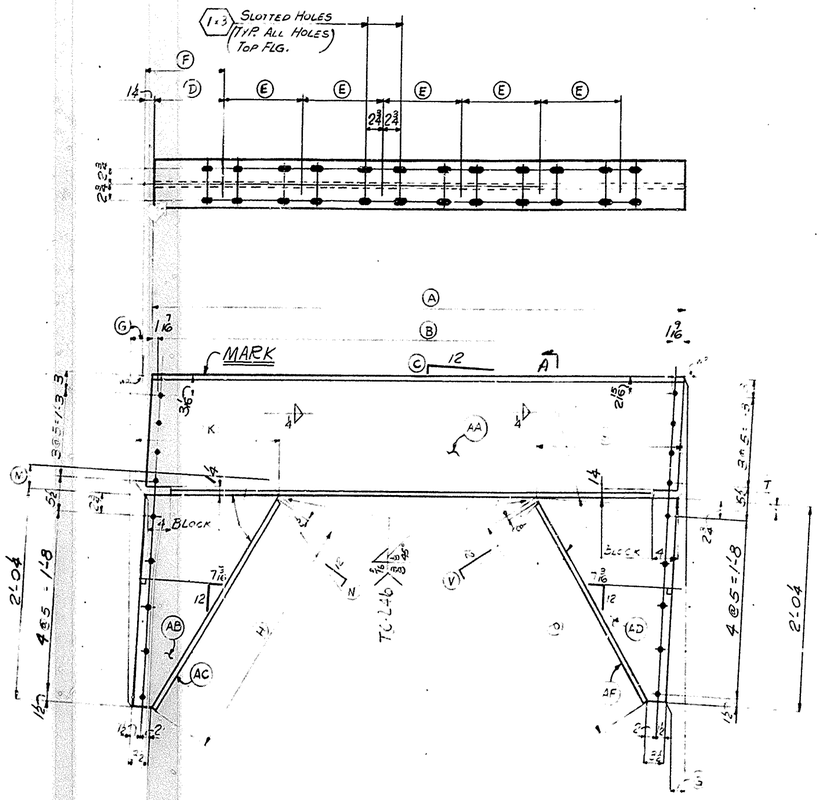

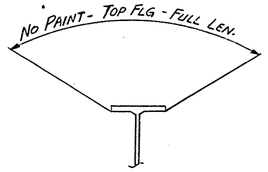

SECTION-A

DIAPHRAGMS MK 73D11 & 73D12

(SEE TABLE FOR DIM.)

MARK	NO. REQ.	A	F	C	E	E	F	G	D	K	M	N	P	S	T	V	AA	AB	AC	AD	AF
73D11	ONE	16'-11 7/16	16'-8 7/16	3/8	1'-2 7/16	3'-0	1'-3 1/16	1 7/16	2'-4 15/16	1'-6 7/16	9/16	2 9/16	2'-3 5/8	1'-5 3/4	9/16	3 7/16	wa	pa	ba	pb	bb
73D12	ONE	16'-11 7/16	16'-8 7/16	5/16	1'-2 7/16	3'-0	1'-3 1/16	1 3/16	2'-4 13/16	1'-6 3/8	7/16	2 11/16	2'-3 3/4	1'-5 13/16	7/16	3 3/8	wb	pc	bc	pd	bd

NASHVILLE BRIDGE COMPANY

SHOP ORDER NO. B-5726 | WORK ORDER NO. | CONTRACT NO. C-6736 | ITEM

COMMONWEALTH OF KENTUCKY, DEPT. OF HIGHWAYS, BRIDGE
OVER NORTHWESTERN PKWY & 22ND ST., JEFFERSON COUNTY

BILL NO. 73 | DRAWING NO. 73

FABRICATION BESSEMER PLANT

WEIGHTS BY | CHECKED BY

SHIP	SHIPPING MARK	ITEM QUANT.	ASSEMBLY MARK	SECT.	LENGTH	MATERIAL SPECIFICATION	ITEM NO.	REMARKS	SPECIF. WEIGHT	A.I.S.C. WEIGHT	PP.
				MAT'L ASTM A36							
ONE	73D11			DIAPHRAGM							
		1	wa	WF 21 WT 55	17 0 3/8	3704 104					21
		1	pa	PL 18 7/16 x 3/8	2 0 13/16	STK 3740 410		R 25 x 1.10 CUTS 2			27
		1	ba	BR 4 x 3/8	2 4 13/16	3905 605					26
		1	pb	PL 17 3/8 x 3/8	2 0 4	STK 3740 410		R 25 x 1.10 CUTS 2			27
		1	bb	BR 4 x 3/8	2 3 1/2	3905 605					25
ONE	73D12			DIAPHRAGM							
		1	wb	WF 21 WT 55	17 0	3704 104					21
		1	pc	PL 18 3/8 x 3/8	2 0 11/16	STK 3740 410		R 25 x 1.10 CUTS 2			27
		1	bc	BR 4 x 3/8	2 4 7/16	3905 605					25
		1	pd	PL 17 13/16 x 3/8	2 0 4	STK 3740 410		R 25 x 1.10 CUTS 2			27
		1	bd	BR 4 x 3/8	2 3 3/8	3905 605					25

SHEET TOTAL

82

FOR GENERAL NOTES SEE DWG GN1
MAT. ASTM A36

APPROVED FOR SHOP
MAT'L 2/10/70 CHIEF DRAFTSMAN
STRUC. 2/10/70 CHIEF ENGINEER
REVISION NOTES
APPR. 2/10/70

DIAPHRAGMS RAMP
BRIDGE OVER NORTHWESTERN PKWY. & 22ND ST.
DEPT. OF HIGHWAYS, COMMONWEALTH OF KENTUCKY
JEFFERSON CTY, FAP 164-2(341), SPSG-273-1(6)
CONTRACTOR: MATTINGLY BRIDGE CO.

NASHVILLE BRIDGE COMPANY
NASHVILLE, TENN.
BESSEMER PLANT

RIVETS NONE 7/16" | HOLES 7/16" OR NOTED | FIELD CONN. 7/8" HSB | SHOP PAINT } SEE GN1 | FIELD
DRAWN BY FK DATE 11-7-67 | IN CHARGE
CHECKED BY VM DATE 11-22-67
DATE PRINTED

BILL MATERIAL NO 73 | CONT. C6736 | S.O. B-5726 | DRAWING NO. 73

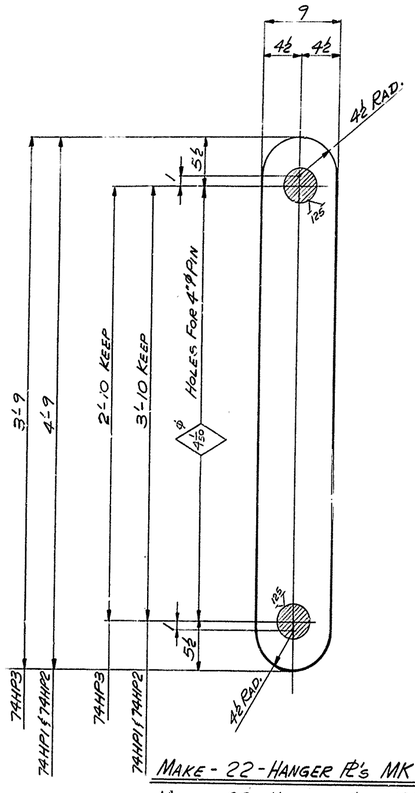

MAKE - 22 - HANGER PL'S MK 74HP1
MAKE - 22 - HANGER PL'S MK 74HP2
MAKE - 6 - HANGER PL'S MK 74HP3

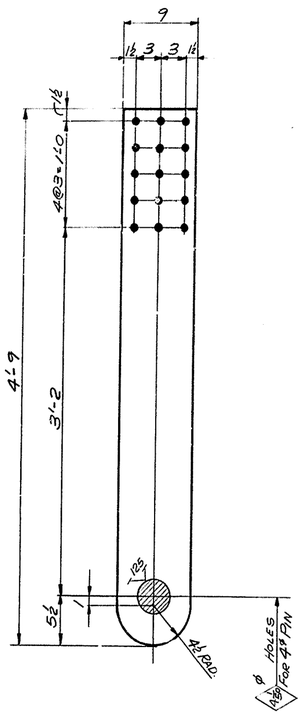

MAKE - 24 - HANGER PL'S MK 74HP4
MAKE - 22 - HANGER PL'S MK 74HP5

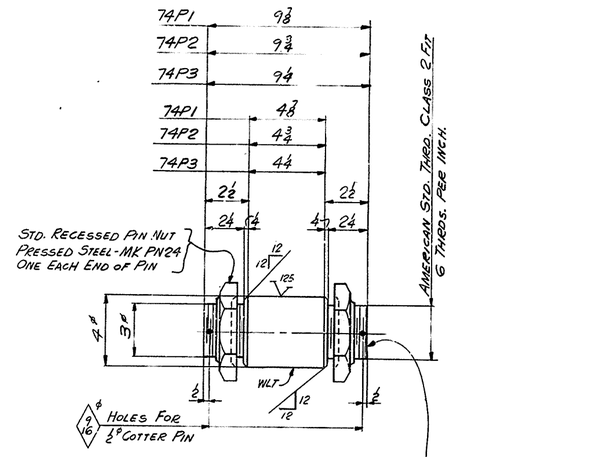

MAKE - 33 - PINS MK 74P1
MAKE - 34 - PINS MK 74P2
MAKE - 9 - PINS MK 74P3

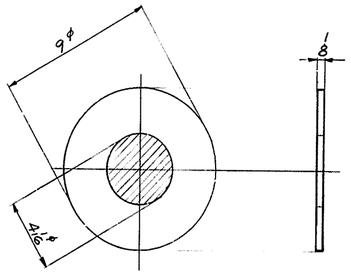

MAKE - 152 - BRONZE WASHERS MK 74W1

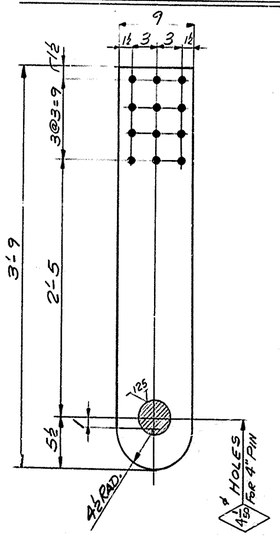

MAKE - 6 - HANGER PL'S MK 74HP6

NASHVILLE BRIDGE COMPANY

SHOP ORDER NO. B5725
WORK ORDER NO.
CONTRACT NO. C-6736

COMMONWEALTH OF KENTUCKY, DEPT. OF HIGHWAYS, BRIDGE OVER NORTHWESTERN PKWY & 22ND ST., JEFFERSON COUNTY

FABRICATION BESSEMER PLANT

BILL NO. 74
DRAWING NO. 74

ITEM
WEIGHTS BY
CHECKED BY

SHIP	SHIPPING MARK	ITEM QUANT.	ASSEMBLY MARK	SUFFIX	SECTION	FINISHED LENGTH FT.	FINISHED LENGTH IN.	ORDERED LENGTH FT.	ORDERED LENGTH IN.	P.O. NO.	ITEM NO.	REMARKS	SPECIF. WEIGHT	A & B C WEIGHT	
					MAT'L ASTM A36 (UN)										
22	74HP1	22		PL	9 x 1/16	4	9	83 CUTS	7@9	3910	233				14/2
22	74HP2	22			9 x 1/4	4	9			STK 2012	229				14/3
6	74HP3	6			9 x 1/16	3	9	83 CUTS	7@9	3910	233				14/4
24	74HP4	24			9 x 1/16	4	9	83 CUTS	7@9	3910	233				14/2
22	74HP5	22			9 x 1/4	4	9			STK 2012	229				14/3
6	74HP6	6		PL	9 x 1/16	3	9	83 CUTS	7@9	3910	233				14/5
33	74P1	33		PIN	4 ϕ	0	9⅞			R 28678 26721	101	A108 GR 1016/1030			14/6
34	74P2	34		PIN	4 ϕ	0	9¾			R 28678 26721	101	A108 GR. 1016/1030			14/6
9	74P3	9		PIN	4 ϕ	0	9¼			R 28678 26721	101	A108 GR 1016/1030			14/6
		152	PN24	PIN NUT	STD. 3" ϕ RECESSED PIN NUT					R 28678 26643	102	PRESSED STEEL			14/7
		152			COTTER PIN (9/16 x 5 1/4)					R 28671 26642	103	COMM. GRADE			14/8
152	74W1	152		PL	9 x 1/8					R 28674 27115	104	4 1/16" HOLE IN 6" BRONZE			14/9
												SHEET TOTAL			

NOTES:
1) FOR GENERAL NOTES SEE DWG. GN1
2) MAT'L ASTM A36 (UN)
3) "WLT" - DENOTES ONE COAT OF HOT MIXTURE OF WHITE LEAD & TALLOW.

83

SUSPENDER DETAILS
BRIDGE OVER NORTHWESTERN PKWY & 22ND ST.
DEPT. OF HIGHWAYS, COMMONWEALTH OF KENTUCKY
JEFFERSON CTY. FAP I 64-2(13) 7.5 P56 & P73.7 & 81
CONTRACTOR: MATTINGLY BRIDGE CO.

NASHVILLE BRIDGE COMPANY
NASHVILLE, TENN.
BESSEMER PLANT

APPROVED FOR SHOP
NMF 7/6/70 CHIEF DRAFTSMAN
JMK 7/8/70 CHIEF ENGINEER
REVISION NOTES

RIVETS NONE
HOLES 13/16" ϕ UNLESS OTHERWISE NOTED
FIELD CONN. 7/8" ϕ HSB
SHOP PAINT } SEE
FIELD } GN1

DRAWN BY FK DATE 1-7-69
IN CHARGE GATT (MMSCO)
CHECKED BY VM DATE 1-9-70
DATE PRINTED

BILLS MATERIAL NO. 74
CONT. C-6736
S.O. B-5725
DRAWING 74

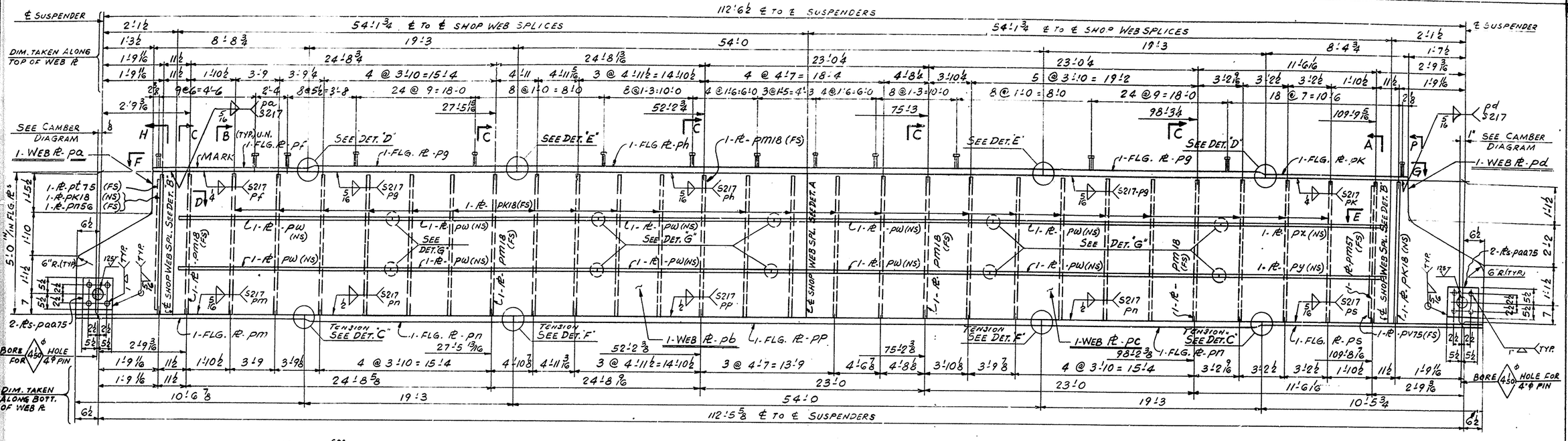

MAKE ONE GIRDER MK-75A6

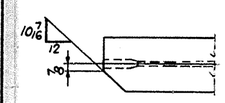

TOP VIEW F

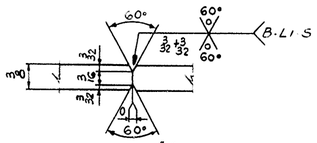

DETAIL "A"

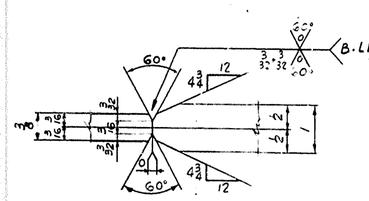

DETAIL "B"

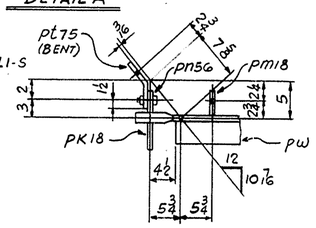

SECTION D

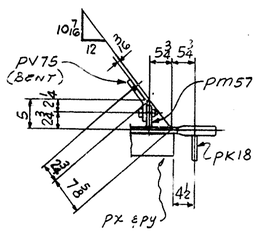

SECTION E

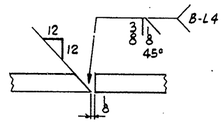

DETAIL "G"

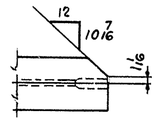

TOP VIEW G

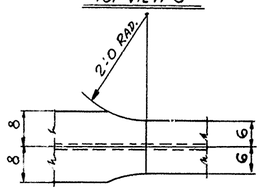

FLG. PL WIDENING DETAIL

MATERIAL ASTM - A36 (U.N.)
FOR GENERAL NOTES SEE DWG. GN1
WORK THIS DWG. WITH DWG. 78

B4

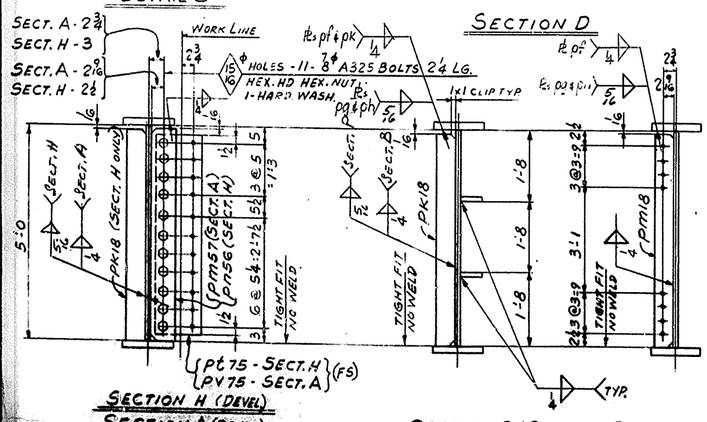

SECTION H (DEVEL)
SECTION A (DEVEL)
SECTION B4P
SECTION C

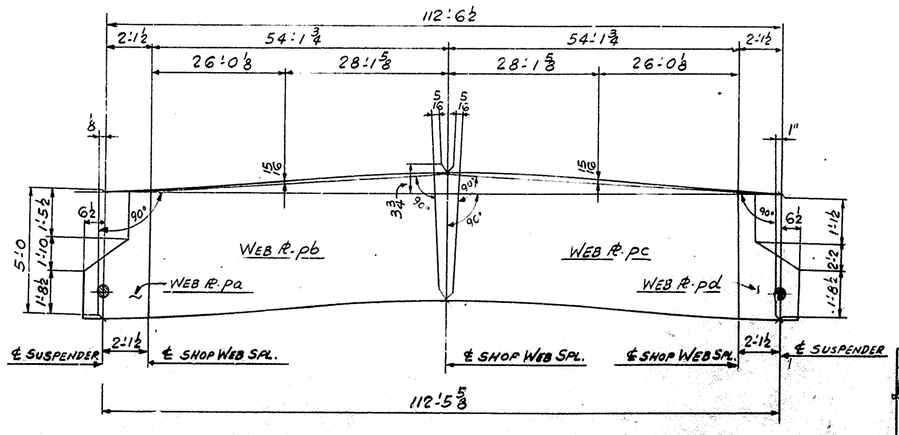

CAMBER DIAGRAM & WEB PL CUTTING SKETCH

APPROVED FOR SHOP	
NMF 7/7/70	CHIEF DRAFTSMAN
JAC 7/8/70	CHIEF ENGINEER
REVISION NOTES	APPL. CH4S. 2/10/70

GIRDER DETAILS SPAN G W
BRIDGE OVER NORTH WESTERN PARKWAY & 22ND ST.
DEPT. OF HIGHWAYS COMMONWEALTH OF KENTUCKY
JEFFERSON COUNTY FAP 164-2(34) I SP5G-213 11L
CONTRACTOR MATTINGLY BRIDGE Co.

NASHVILLE BRIDGE COMPANY
NASHVILLE, TENN.
BESSEMER PLANT

SCALE	15/16 OR NOTED
HOLES	13/16 OR NOTED ⅞ϕ H.S.B.
FIELD CONN.	SEE DWG GN1
SHOP PAINT	
FIELD	
BILLS MATERIAL NO.	75
DRAWN BY	G.D. DATE 11-20-69
IN CHARGE	
CHECKED BY	DATE 12/8/69
DATE PRINTED	
CONT.	C6736
S.O.	B5725
	75

[redacted]

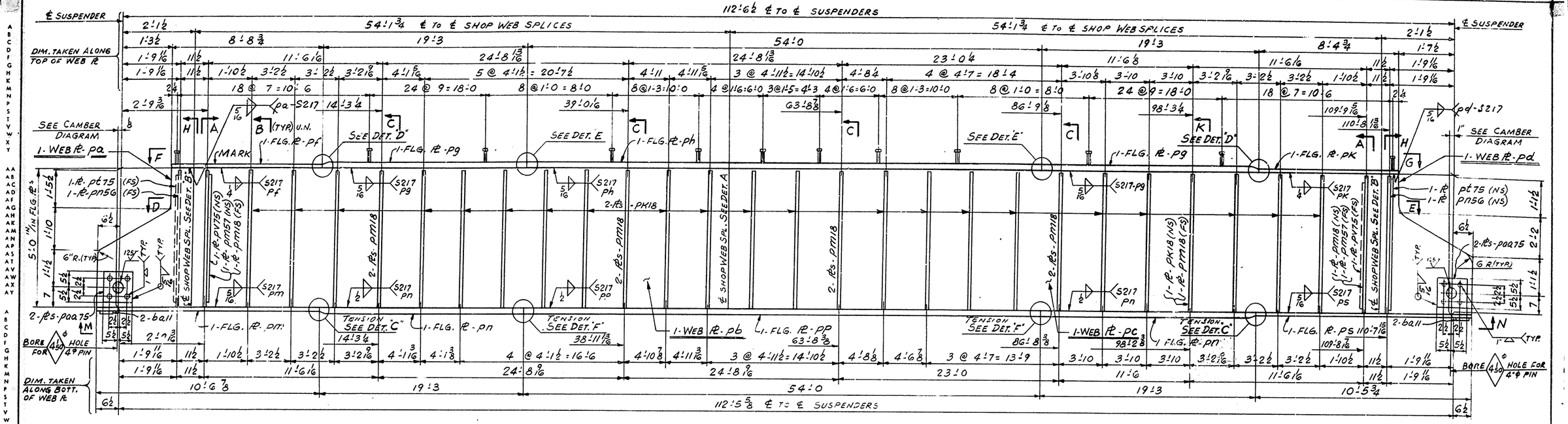

MAKE ONE GIRDER MK-76B6

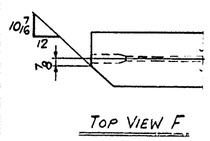

TOP VIEW F

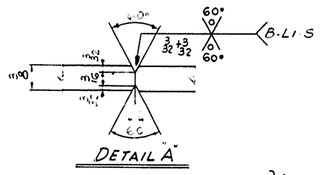

DETAIL A

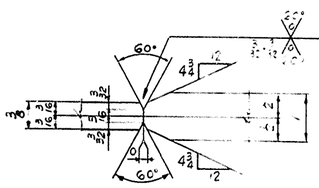

DETAIL B

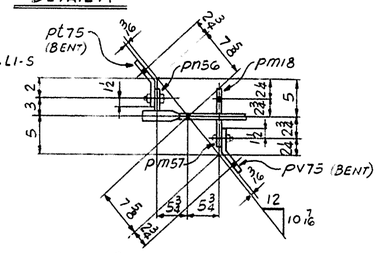

SECTION D

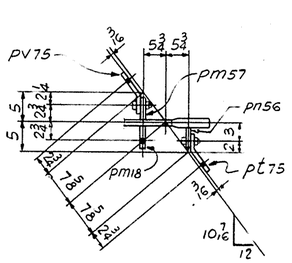

SECTION E

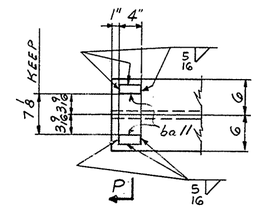

SECTION M (AS SHOWN)
SECTION N (ROTATE 180°)

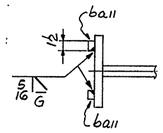

SECT. P

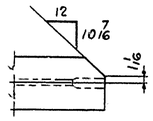

TOP VIEW G

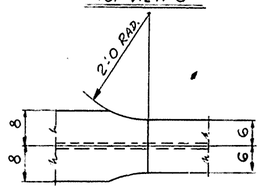

FLG. ℞ WIDENING DETAIL

MATERIAL ASTM-A36 (U.N.)
FOR GENERAL NOTES SEE DWG. GN1
WORK THIS DWG WITH DWG 78

85

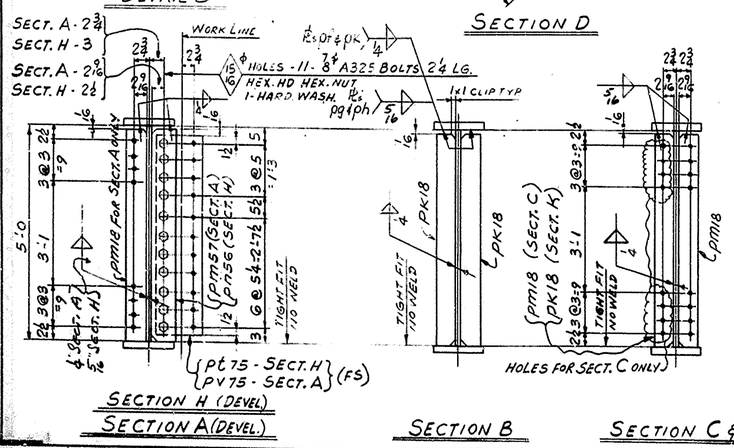

SECTION H (DEVEL)
SECTION A (DEVEL.)
SECTION B
SECTION C & K

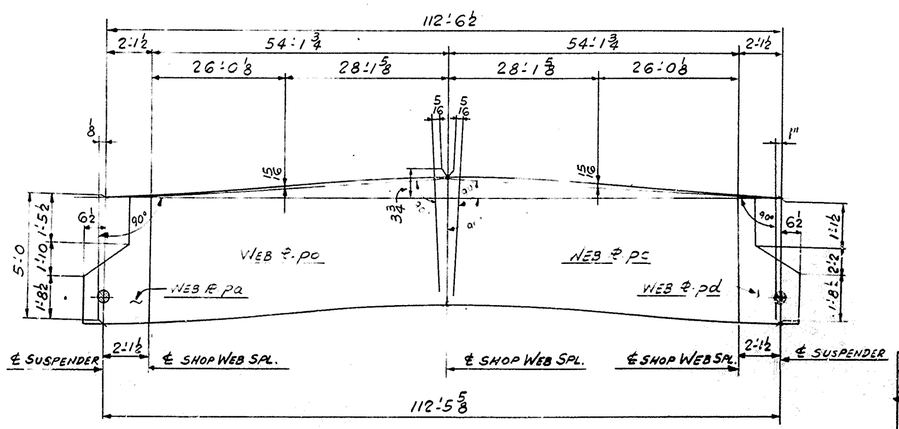

CAMBER DIAGRAM & WEB ℞ CUTTING SKETCH

GIRDER DETAILS SPAN 6 W	
BRIDGE OVER NORTH WESTERN PARKWAY & 22ND ST.	
DEPT. OF HIGHWAYS COMMONWEALTH OF KENTUCKY	
JEFFERSON COUNTY FAP 164 2(34) 1 SP56-273 11L	
CONTRACTOR MATTINGLY BRIDGE CO.	
NASHVILLE BRIDGE COMPANY, NASHVILLE, TENN. — BESSEMER PLANT	
HOLES 15/16⌀ OR NOTED	DRAWN BY G.D. DATE 11-20-69
FIELD CONN. ⅞⌀ H.S.B.	IN CHARGE GATTI (PENSON)
SHOP PAINT SEE DWG	CHECKED BY Y.M. DATE 12/19/69
FIELD " GN1	DATE PRINTED
BILLS MATERIAL NO. 76	CONT. C6736 / S.O. B5725 — DRAWING NO. 76

APPROVED FOR SHOP
CHIEF DRAFTSMAN
CHIEF ENGINEER
REVISION NOTES
APPL. CHGS. 3/10/70

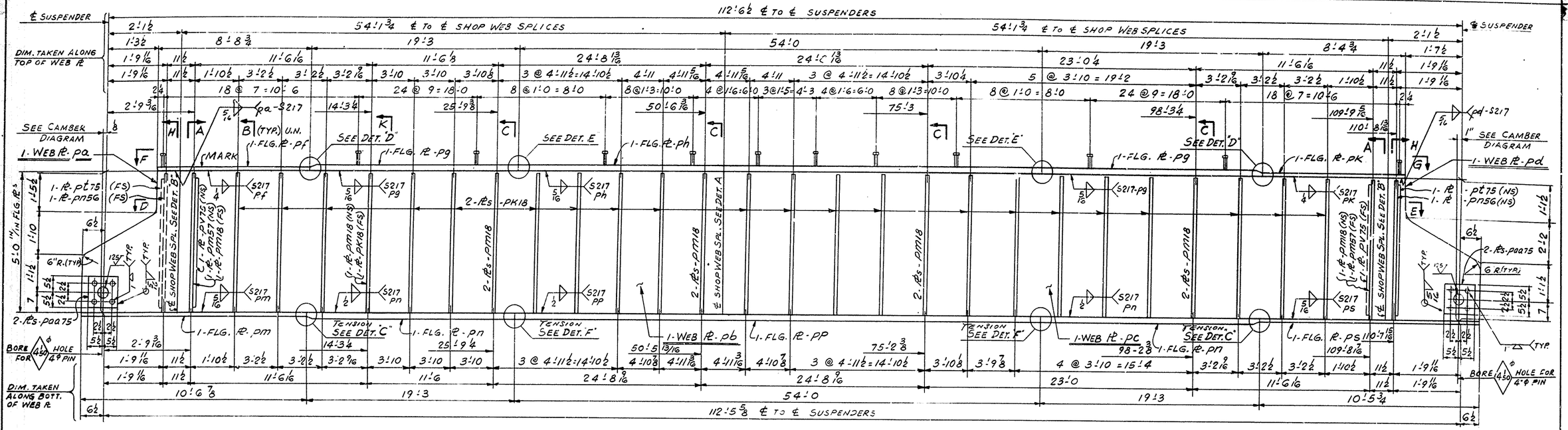

MAKE ONE GIRDER MK-77C6

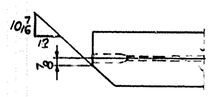

TOP VIEW F

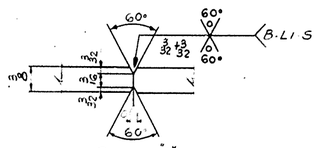

DETAIL A

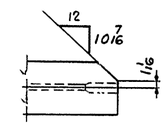

TOP VIEW G

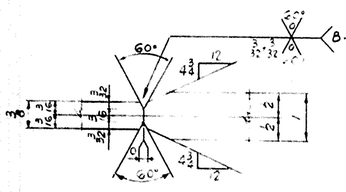

DETAIL S

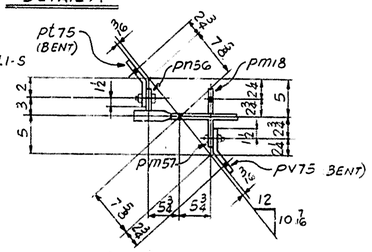

SECTION D

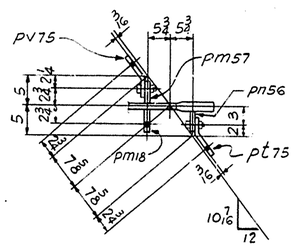

SECTION E

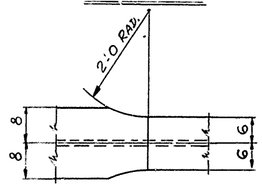

FLG. PL WIDENING DETAIL

MATERIAL ASTM - A36 (U.N.)
FOR GENERAL NOTES SEE DWG. GN1
WORK THIS DWG. WITH DWG. 78

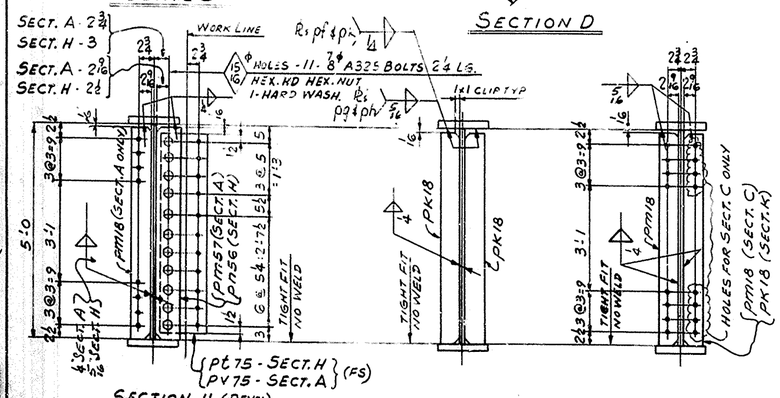

SECTION H (DEVEL)
SECTION A (DEVEL.)
SECTION B
SECTION C&K

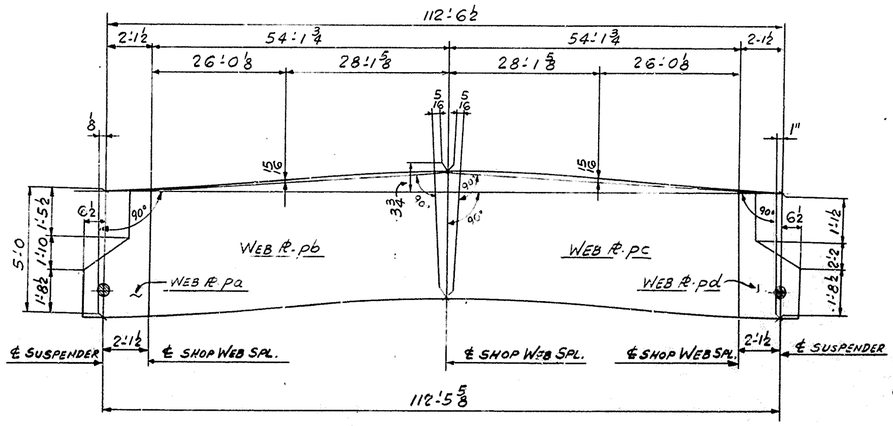

CAMBER DIAGRAM & WEB PL CUTTING SKETCH

86

GIRDER DETAILS SPAN 6W
BRIDGE OVER NORTH WESTERN PARKWAY & 22ND ST.
DEPT. OF HIGHWAYS COMMONWEALTH OF KENTUCKY
JEFFERSON COUNTY FAP 164-2(34) I SP5C-273 IL
CONTRACTOR MATTINGLY BRIDGE Co.

NASHVILLE BRIDGE COMPANY
NASHVILLE, TENN.
BESSEMER PLANT

APPROVED FOR SHOP
CHIEF DRAFTSMAN
CHIEF ENGINEER
REVISION NOTES
APPL. CHGE. 3/10/70

DRAWN BY G.D. DATE 11-20-69
IN CHARGE - GATTI (TENNESSEE)
CHECKED BY VM DATE 12/18/69
DATE PRINTED

BILLS MATERIAL NO. 77
CONT. C6736
S.O. B5725
DRAWING NO. 77

[redacted]

NASHVILLE BRIDGE COMPANY

SHOP ORDER NO. B5725 | WORK ORDER NO. | CONTRACT NO. C6736

COMMONWEALTH OF KENTUCKY DEPT. OF HIGHWAYS

BRIDGE OVER NORTHWESTERN PARKWAY & 22ND ST. JEFFERSON COUNTY

BILL NO. 75 | DRAWING NO. 75 & 78

FABRICATION BESSEMER PLANT

ITEM | WEIGHTS BY | CHECKED BY

SHIP	SHIPPING MARK	ITEM QUANT	ASSEMBLY MARK		SECTION	FINISHED LENGTH FT. IN.	ORDERED LENGTH FT. IN.	A.O. NO.	ITEM NO.	REMARKS	SPEC'F. WEIGHT	A.I.S.C. WEIGHT
					MATERIAL ASTM-A36 (U.N.)							
ONE	75AG				GIRDER							
		1	pa	PL	32⅛×1	5 0		3910	306	PL G1×3:G MATCH CUT 1-EA-pa & pb100		13/4
		1	pb	PL	60 15/16×⅜	54 1⅞	61×54:4	3908	437			12/2
		1	pc	PL	60 15/16×⅜	54 1⅞	61×54:4	3908	437	PL G1×3:G MATCH CUT 1-EA-pd & pb26		12/2
		1	pd	PL	33×1	5 0		3910	306			7/2
		1	pf	PL	12×9/16	8 8¾		STK 2630	333			12/7
		2	pg	PL	12×½	19 3	98×19:5 CUTS 8	3910	220			12/6
		1	ph	PL	16×½	54 0	48½×54:2 CUTS 3	3910	223			12/4
		1	pk	PL	12×9/16	8 4¾		STK 2630	333			12/7
		1	pm	PL	12×1	10 6⅜		3910	303			12/8
		2	pn	PL	12×2¾	19 3	74½×19:5 CUTS 6	3910	203			12/5
		1	pp	PL	16×2¾	54 0	49½×54:2 CUTS 3	3910	206			12/3
		1	ps	PL	12×1	10 5¾		3910	303			12/8
		1	pt75	PL	7¾×⅜	4 7		STK 3372	527	(BENT)		12/14
		1	pv75	PL	8×⅜	4 7		STK 3372	527	(BENT)		12/14
		10	pw	PL	4×⅜	20 0		3905	605			12/10
		1	px	PL	4×⅜	8 1 3/16						12/10
		1	py	PL	4×⅜	8 0 13/16						12/10
		24	pk18	PL	4×⅜	4 11 5/16				(FIE)		12/11
		5	pm18	PL	4×⅜	4 11 5/16						
		1	pn56	PL	4×⅜	4 11 5/16						
		1	pm57	PL	4×⅜	4 11 5/16		3905	605	(FIE)		12/11
		4	pa275	PL	11×½	0 11		STK 3680	405			12/12
		22			⅞ϕ BOLTS	0 24		26661	202	(A325) HEX. HD HEX. NUT		
		22			HARD. WASHERS FOR ⅞ϕ BOLTS			26661	203	(A325)		
		512			¾ϕ STUDS	0 4		27120	301	AUTO. END WELDED		12/1.7

SHEET TOTAL

NASHVILLE BRIDGE COMPANY

SHOP ORDER NO. B5725 | WORK ORDER NO. | CONTRACT NO. C6736

COMMONWEALTH OF KENTUCKY DEPT. OF HIGHWAYS

BRIDGE OVER NORTHWESTERN PARKWAY & 22ND ST. JEFFERSON COUNTY

BILL NO. 76 | DRAWING NO. 76 & 78

FABRICATION BESSEMER PLANT

ITEM | WEIGHTS BY | CHECKED BY

SHIP	SHIPPING MARK	ITEM QUANT	ASSEMBLY MARK		SECTION	FINISHED LENGTH FT. IN.	ORDERED LENGTH FT. IN.	A.O. NO.	ITEM NO.	REMARKS	SPEC'F. WEIGHT	A.I.S.C. WEIGHT
					MATERIAL ASTM-A36 (U.N.)							
ONE	76BG				GIRDER							
		1	pa	PL	32⅛×1	5 0		3910	306	PL G1×3:G MATCH CUT 1-EA-pa & pc110		13/4
		1	pb	PL	60 15/16×⅜	54 1⅞	61×54:4	3908	437			12/2
		1	pc	PL	60 15/16×⅜	54 1⅞	61×54:4	3908	437	PL G1×3:G MATCH CUT 1-EA-pd & pb27		12/2
		1	pd	PL	33×1	5 0		3910	306			7/2
		1	pf	PL	12×9/16	8 8¾		STK 2630	333			12/7
		2	pg	PL	12×½	19 3	98×19:5 CUTS 8	3910	220			12/6
		1	ph	PL	16×½	54 0	48½×54:2 CUTS 3	3910	223			11/4
		1	pk	PL	12×9/16	8 4¾		STK 2630	333			12/7
		1	pm	PL	12×1	10 6⅜		3910	303			12/8
		2	pn	PL	12×2¾	19 3	74½×19:5 CUTS 6	3910	203			11/5
		1	pp	PL	16×2¾	54 0	49½×54:2 CUTS 3	3910	206			14/3
		1	ps	PL	12×1	10 5¾		3910	303			12/8
		2	pt75	PL	7¾×⅜	4 7		STK 3372	527	(BENT)		13/14
		2	pv75	PL	8×⅜	4 7		STK 3372	527	(BENT)		13/14
		2	pm57	PL	4×⅜	4 11 5/16		3905	605	(FIE)		12/11
		2	pn56	PL	4×⅜	4 11 5/16						
		11	pm18	PL	4×⅜	4 11 5/16						
		43	pk18	PL	4×⅜	4 11 5/16		3905	605	(FIE)		12/11
		4	pa275	PL	11×½	0 11		STK 3680	405			14/12
		4	ba11	BAR	1½×1	0 4		3910	395			12/13
		512			¾ϕ STUDS	0 4		27120	301	AUTO. END WELDED		
		44			⅞ϕ BOLTS	0 24		26661	202	(A325) HEX. HD HEX. NUT		
		44			HARD. WASHERS FOR ⅞ϕ BOLTS			26661	203	(A325)		

SHEET TOTAL

NASHVILLE BRIDGE COMPANY

SHOP ORDER NO. B5725 | WORK ORDER NO. | CONTRACT NO. C6736

COMMONWEALTH OF KENTUCKY DEPT. OF HIGHWAYS

BRIDGE OVER NORTHWESTERN PARKWAY & 22ND ST. JEFFERSON CO.

BILL NO. 77 | DRAWING NO. 77 & 78

FABRICATION BESSEMER PLANT

ITEM | WEIGHTS BY | CHECKED BY

SHIP	SHIPPING MARK	ITEM QUANT	ASSEMBLY MARK		SECTION	FINISHED LENGTH FT. IN.	ORDERED LENGTH FT. IN.	A.O. NO.	ITEM NO.	REMARKS	SPEC'F. WEIGHT	A.I.S.C. WEIGHT
					MATERIAL ASTM-A36 (U.N.)							
ONE	77CG				GIRDER							
		1	pa	PL	32⅛×1	5 0		3910	306	PL G1×3:G MATCH CUT 1-EA-pa & pc111		13/4
		1	pb	PL	60 15/16×⅜	54 1⅞	61×54:4	3908	437			12/2
		1	pc	PL	60 15/16×⅜	54 1⅞	61×54:4	3908	437	PL G1×3:G MATCH CUT 1-EA-pd & pb28		12/2
		1	pd	PL	33×1	5 0		3910	306			7/2
		1	pf	PL	12×9/16	8 8¾		STK 2630	333			12/7
		2	pg	PL	12×½	19 3	98×19:5 CUTS 8	3910	220			2/6
		1	ph	PL	16×½	54 0	48½×54:2 CUTS 3	3910	223			12/4
		1	pk	PL	12×9/16	8 4¾		STK 2630	333			12/7
		1	pm	PL	12×1	10 6⅜		3910	303			12/8
		2	pn	PL	12×2¾	19 3	74½×19:5 CUTS 6	3910	203			11/5
		1	pp	PL	16×2¾	54 0	49½×54:2 CUTS 3	3910	206			12/3
		1	ps	PL	12×1	10 5¾		3910	303			12/8
		2	pt75	PL	7¾×⅜	4 7		STK 3372	527	(BENT)		13/14
		2	pv75	PL	8×⅜	4 7		STK 3372	527	(BENT)		13/14
		2	pm57	PL	4×⅜	4 11 5/16		3905	605	(FIE)		12/11
		2	pn56	PL	4×⅜	4 11 5/16						
		11	pm18	PL	4×⅜	4 11 5/16						
		43	pk18	PL	4×⅜	4 11 5/16		3905	605	(FIE)		12/11
		4	pa275	PL	11×½	0 11		STK 3680	405			14/12
		512			¾ϕ STUDS	0 4		27120	301	AUTO. END WELDED		
		44			⅞ϕ BOLTS	0 24		26661	202	(A325) HEX. HD HEX. NUT		
		44			HARD WASHERS FOR ⅞ϕ BOLTS			26661	203	(A325)		

SHEET TOTAL

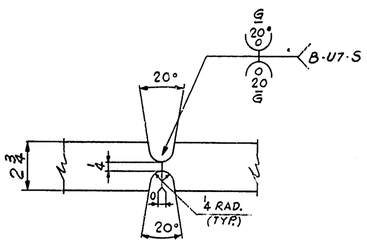

DETAIL F

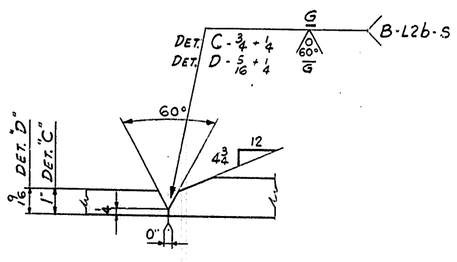

DETAIL "C" & "D"

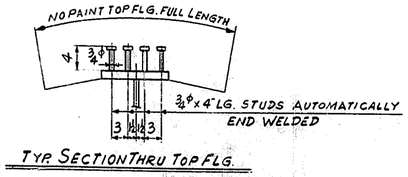

TYP. SECTION THRU TOP FLG.

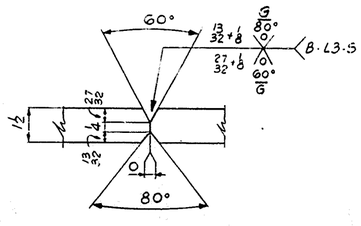

DETAIL E

WORK THIS DWG WITH DWG'S. 75, 76, 77

FOR GENERAL NOTES SEE DWG GN1

MATL ASTM A36 (U.N.)

87

GIRDER DETAILS SPAN GW

BRIDGE OVER NORTHWESTERN PARKWAY & 22ND ST.

DEPT. OF HIGHWAYS COMMONWEALTH OF KENTUCKY

JEFFERSON COUNTY FAP IG4-2(94) SP56-273-11L

CONTRACTOR MATTINGLY BRIDGE CO.

NASHVILLE BRIDGE COMPANY
NASHVILLE, TENN
BESSEMER PLANT

APPROVED FOR SHOP: CHIEF DRAFTSMAN / CHIEF ENGINEER

REVISION NOTES: AMC. CORR. 2/19/70

HOLES: 15/16ϕ OR NOTED; ⅞ϕ OR NOTED

FIELD CONN.: ⅞ϕ H.S.B.

SHOP PAINT: SEE GN1

FIELD:

DRAWN BY G.D. DATE 11-20-69

IN CHARGE [illegible]

CHECKED BY [illegible] DATE 12/15/69

DATE PRINTED

BILL OF MATERIAL NO. 75, 76, 77

CONT. C6736

S.O. B5725

DRAWING NO. 78

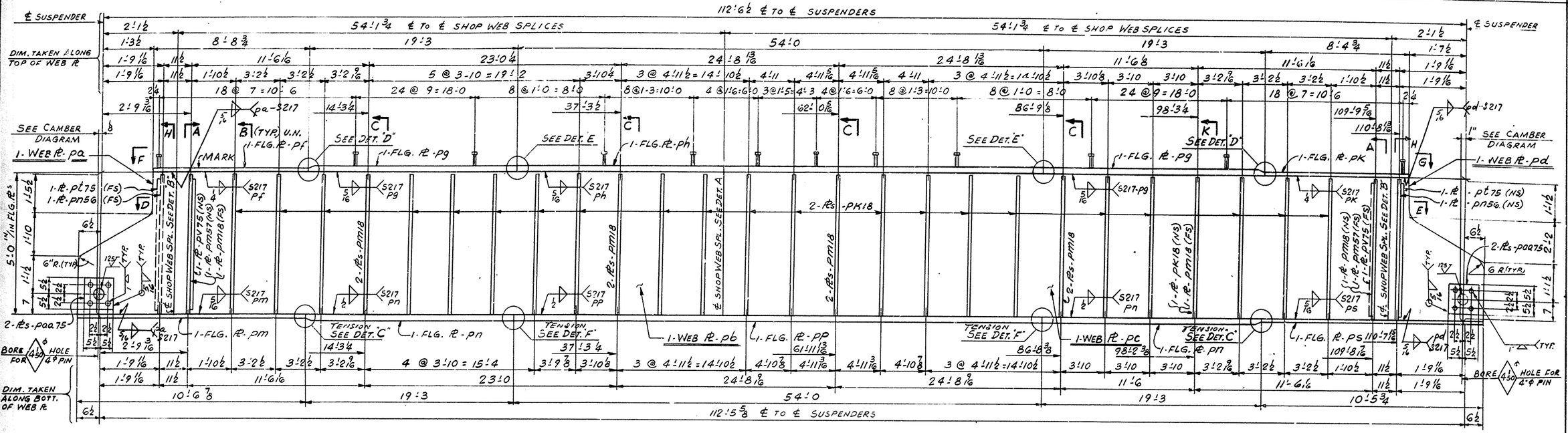

MAKE ONE GIRDER MK~79D6

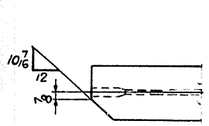

TOP VIEW F

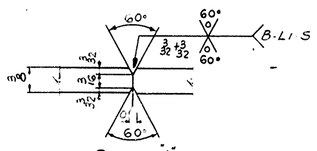

DETAIL 'A'

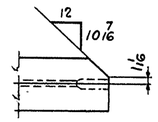

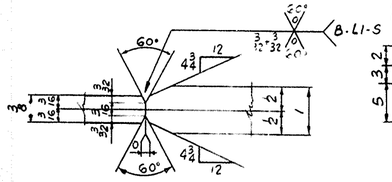

DETAIL 'B'

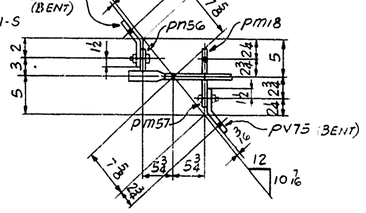

SECTION D

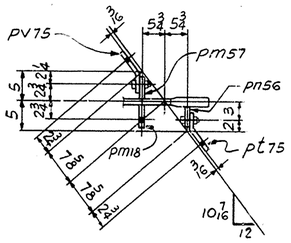

SECTION E

TOP VIEW G

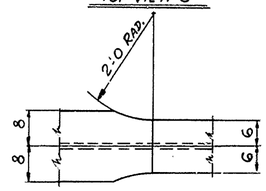

FLG. PL WIDENING DETAIL

MATERIAL ASTM - A36 (U.N.)
FOR GENERAL NOTES SEE DWG. GN1
WORK THIS DWG. WITH DWG. 82

88

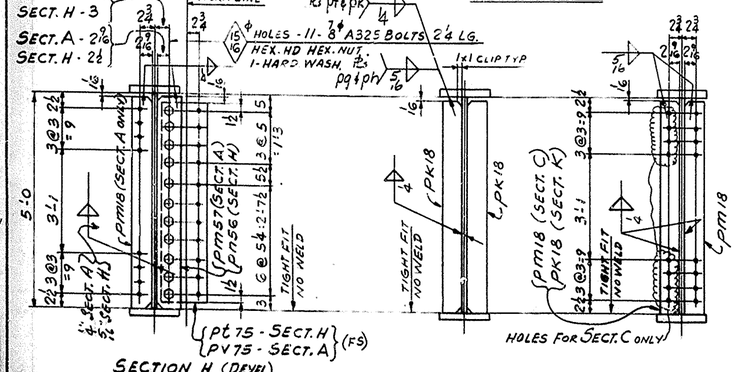

SECTION H (DEVEL)
SECTION A (DEVEL.)
SECTION B
SECTION C & K

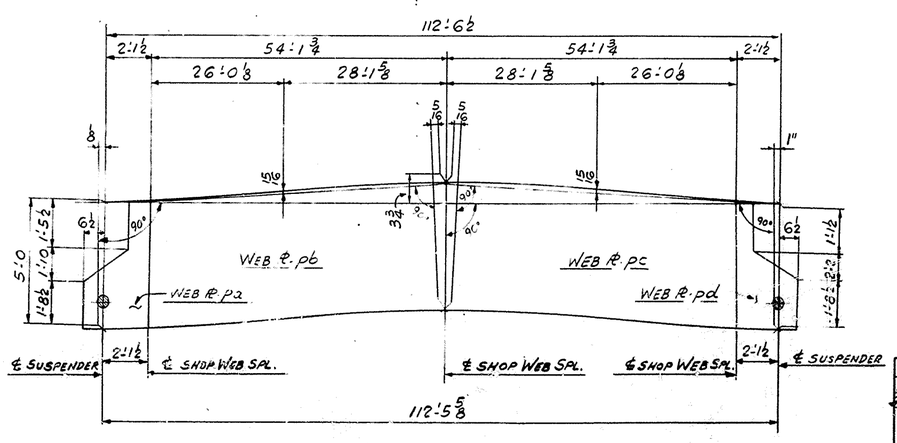

CAMBER DIAGRAM & WEB PL CUTTING SKETCH

GIRDER DETAILS SPAN 6W
BRIDGE OVER NORTH WESTERN PARKWAY & 22ND ST.
DEPT. OF HIGHWAYS COMMONWEALTH OF KENTUCKY
JEFFERSON COUNTY FAP 164-2(34) I SP56-273 IL
CONTRACTOR MATTINGLY BRIDGE Co.

NASHVILLE BRIDGE COMPANY
NASHVILLE, TENN.
BESSEMER PLANT

APPROVED FOR SHOP
WMF 7/18/70 Chief Draftsman
ACK 7/17/70 Chief Engineer
REVISION NOTES
Appl. Chgs. 2/19/70

Holes 15/16⌀ or noted
Field Conn. ¾⌀ H.S.B.
Shop Paint } SEE DWG GN1
Field }
Drawn by G.D. Date 11-21-69
IN CHARGE - GATTI (72-2308)
Checked by V.M. Date 12/19/69
Date Printed

Bills Material No.	CONT.	Drawing No.
79	C6736	79
	S.O. B5725	

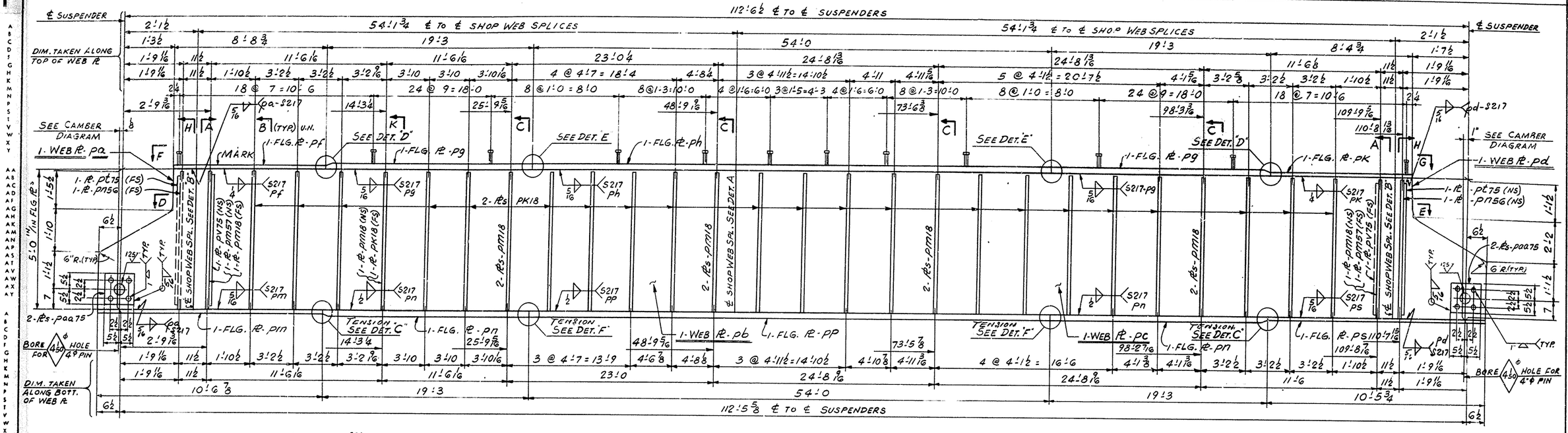

MAKE ONE GIRDER MK~80E6

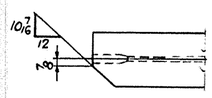

TOP VIEW F

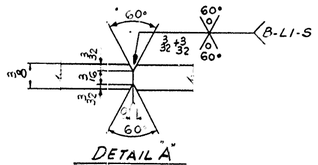

DETAIL "A"

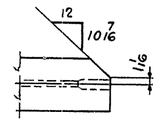

TOP VIEW G

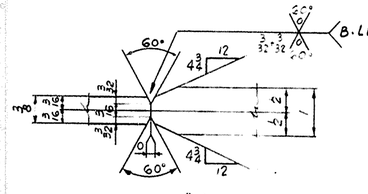

DETAIL "B"

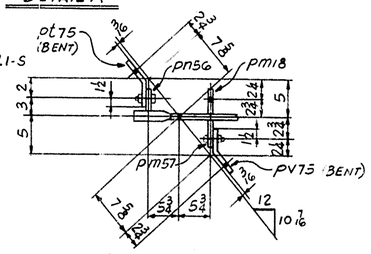

SECTION D

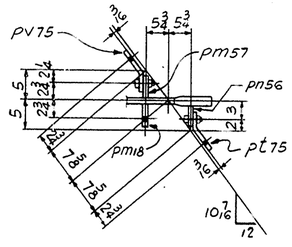

SECTION E

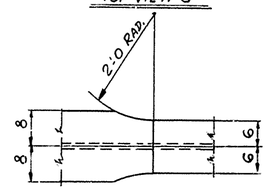

FLG. PL WIDENING DETAIL

MATERIAL ASTM - A36 (U.N.)
FOR GENERAL NOTES SEE DWG. GN1
WORK THIS DWG WITH DWG. 82

89

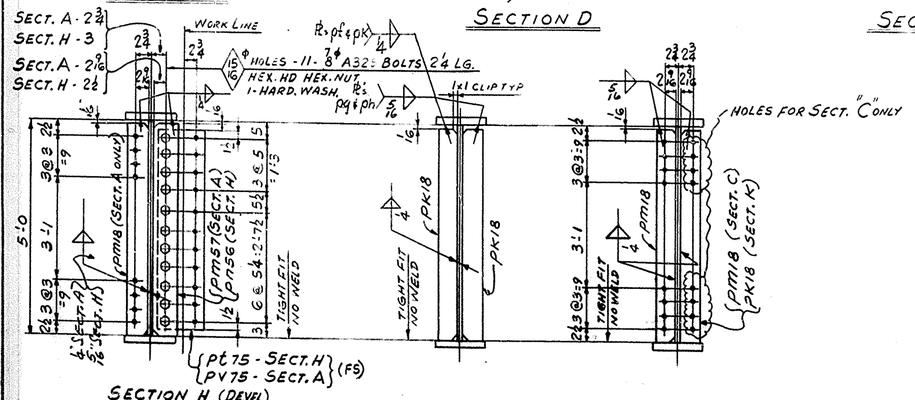

SECTION H (DEVEL)
SECTION A (DEVEL.)
SECTION B
SECTION C & K

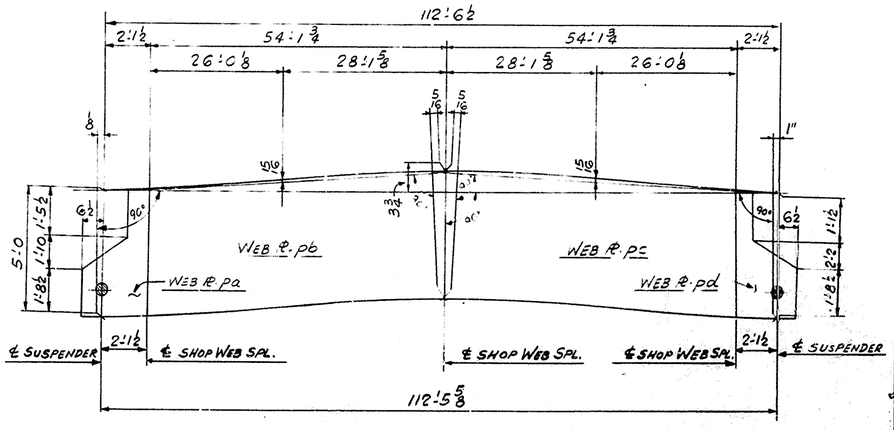

CAMBER DIAGRAM & WEB PL CUTTING SKETCH

GIRDER DETAILS SPAN G W
BRIDGE OVER NORTH WESTERN PARKWAY & 22ND ST.
DEPT. OF HIGHWAYS COMMONWEALTH OF KENTUCKY
JEFFERSON COUNTY FAP 164-2(34) I SP56-279 I.L.
CONTRACTOR MATTINGLY BRIDGE Co.

NASHVILLE BRIDGE COMPANY
NASHVILLE, TENN.
BESSEMER PLANT

APPROVED FOR SHOP
CHIEF DRAFTSMAN
CHIEF ENGINEER
REVISION NOTES
APPL. CHGS. 2/10/70

DRAWN BY G.D. DATE 11-21-69
IN CHARGE - GATTI (TENSION)
CHECKED BY DATE 12/18/69
DATE PRINTED

BILLS MATERIAL NO. 80
CONT. C6736
S.O. B5725
DRAWING NO. 80

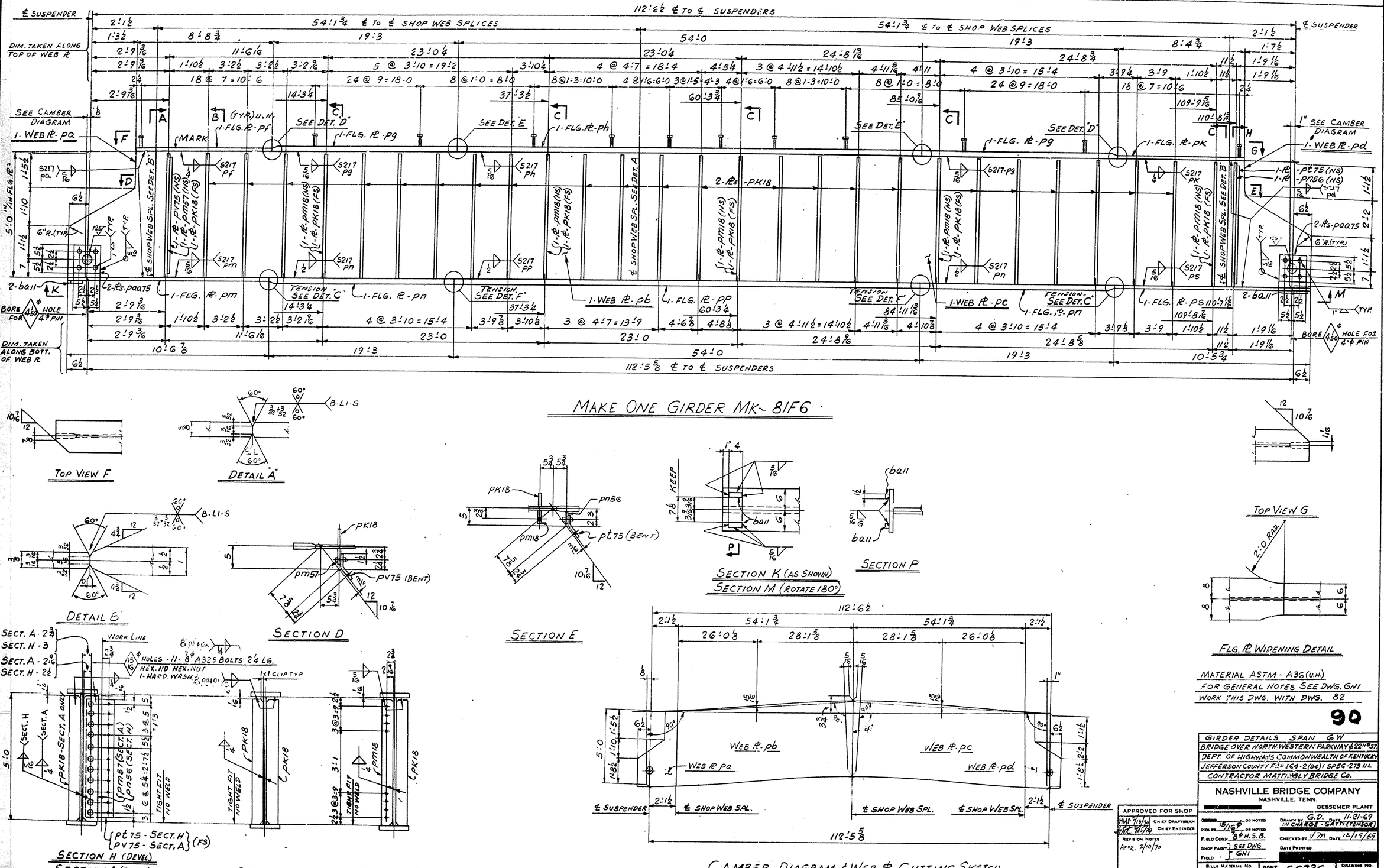

MAKE ONE GIRDER MK-81F6

TOP VIEW F

DETAIL 'A'

DETAIL B

SECTION D

SECTION E

SECTION K (AS SHOWN)
SECTION M (ROTATE 180°)

SECTION P

TOP VIEW G

FLG. PL WIDENING DETAIL

MATERIAL ASTM - A36 (U.N.)
FOR GENERAL NOTES SEE DWG. GN1
WORK THIS DWG. WITH DWG. 82

90

SECTION H (DEVEL.)
SECTION A (DEVEL.)
SECTION B
SECTION C

CAMBER DIAGRAM & WEB PL CUTTING SKETCH

APPROVED FOR SHOP		
HMF 7/13/70	CHIEF DRAFTSMAN	
7/14/70	CHIEF ENGINEER	
REVISION NOTES APR. 2/10/70		

GIRDER DETAILS SPAN 6W
BRIDGE OVER NORTH WESTERN PARKWAY & 22ND ST.
DEPT. OF HIGHWAYS COMMONWEALTH OF KENTUCKY
JEFFERSON COUNTY F.A.P. 164-2(34) I SP56-278 ILL
CONTRACTOR MATTINGLY BRIDGE Co.

NASHVILLE BRIDGE COMPANY
NASHVILLE, TENN.
BESSEMER PLANT

HOLES	15/16 ⌖ - 03 NOTED; ⅞ ⌖ OR NOTED
FIELD CONN.	⅞ ⌖ H.S.B.
SHOP PAINT / FIELD	SEE DWG GN1
DRAWN BY	G.D. DATE 11-21-69
IN CHARGE - GATTI (TENSOR)	
CHECKED BY	VM DATE 12/19/69
DATE PRINTED	
BILLS MATERIAL NO.	81
CONT.	C6736
S.O.	B5725
DRAWING NO.	81

NASHVILLE BRIDGE COMPANY

SHOP ORDER NO. B5725 | WORK ORDER NO. | CONTRACT NO. C6736

COMMONWEALTH OF KENTUCKY DEPT. OF HIGHWAYS

BRIDGE OVER NORTHWESTERN PARKWAY & 22ND ST. JEFFERSON COUNTY

BILL NO. 79 | DRAWING NO. 79 & 82

FABRICATION BESSEMER PLANT

ITEM | WEIGHTS BY | CHECKED BY

SHIP	SHIPPING MARK	ITEM QUANT	ASSEMBLY MARK	SHAPE	SECTION	FINISHED LENGTH FT. IN.	ORDERED LENGTH FT. IN.	P.O. NO.	ITEM NO.	REMARKS	SPECIF. WEIGHT	AISC WEIGHT
					MATERIAL ASTM-A36 (U.N.)							
ONE	79DG				GIRDER							
		1	pa	PL	32⅛ × 1	5 0		3910	306	PL 61×3:G MATCH CUT 1-EA-pa & pb412		13/4
		1	pb	PL	60 15/16 × ⅜	54 1⅞	61×54:4	3908	437			12/2
		1	pc	PL	60 15/16 × ⅜	54 1¾	61×54:4	3908	437	PL 61×3:G MATCH CUT 1-EA-pd & pb620		12/2
		1	pd	PL	33 × 1	5 0		3910	306			7/2
		1	pf	PL	12 × 9/16	8 8¾		STK 2630	333			12/7
		2	pg	PL	12 × 1½	19 3	98×19:5 CUTS 8	3910	220			12/6
		1	ph	PL	16 × 1½	54 0	48½×54:2 CUTS 3	3910	223			12/4
		1	pk	PL	12 × 9/16	8 8¾		STK 2630	333			12/7
		1	pm	PL	12 × 1	10 6⅞	98 CUTS 8 & 12	3910	301			12/8
		2	pn	PL	12 × 2¾	19 3	74⅞×19:5 CUTS 6	3910	203			12/5
		1	pp	PL	16 × 2¾	54 0	65½×54:2 CUTS 4	3910	204			12/3
		1	ps	PL	12 × 1	10 5¾	98 CUTS 8 & 12	3910	301			12/8
		2	pt75	PL	7¾ × ⅜	4 7		STK 3372	527	(BENT)		12/14
		2	pv75	PL	8 × ⅜	4 7		STK 3372	527	(BENT)		12/14
		2	pm57	PL	4 × ⅜	4 11 15/16		3905	605	(FIE)		12/11
		2	pn56	PL	4 × ⅜	4 11 15/16						
		11	pm18	PL	4 × ⅜	4 11 15/16						
		43	pk18	PL	4 × ⅜	4 11 15/16		3905	605	(FIE)		12/11
		4	pa075	PL	11 × ½	0 11		STK 3680	405			12/12
		512			¾ϕ STUDS	0 4		27190	301	AUTO. END WELDED		
		44			⅞ϕ BOLTS	0 24		26661	202	(A325) HEX. HD HEX. NUT		
		44			HARD. WASHERS FOR ⅞ϕ BOLTS			26661	203	(A325)		

SHEET TOTAL

NASHVILLE BRIDGE COMPANY

SHOP ORDER NO. B5725 | WORK ORDER NO. | CONTRACT NO. C6736

COMMONWEALTH OF KENTUCKY DEPT. OF HIGHWAYS

BRIDGE OVER NORTHWESTERN PARKWAY & 22ND ST. JEFFERSON COUNTY

BILL NO. 80 | DRAWING NO. 80 & 82

FABRICATION BESSEMER PLANT

ITEM | WEIGHTS BY | CHECKED BY

SHIP	SHIPPING MARK	ITEM QUANT	ASSEMBLY MARK	SHAPE	SECTION	FINISHED LENGTH FT. IN.	ORDERED LENGTH FT. IN.	P.O. NO.	ITEM NO.	REMARKS	SPECIF. WEIGHT	AISC WEIGHT
					MATERIAL ASTM-A36 (U.N.)							
ONE	80EG				GIRDER							
		1	pa	PL	32⅛ × 1	5 0		3910	306	PL-61×3:G MATCH CUT 1-EA-pa & pc143		13/4
		1	pb	PL	60 15/16 × ⅜	54 1⅞	61×54:4	3908	437			12/2
		1	pc	PL	60 15/16 × ⅜	54 1¾	61×54:4	3908	437			12/2
		1	pd	PL	33 × 1	5 0		3910	306	PL 61×3:G MATCH CUT 1-EA-pd & pb621		7/2
		1	pf	PL	12 × 9/16	8 8¾		STK 2630	333			12/7
		2	pg	PL	12 × 1½	19 3	88½×19:5 CUTS 7	3910	221			12/6
		1	ph	PL	16 × 1½	54 0	48½×54:2 CUTS 3	3910	223			12/4
		1	pk	PL	12 × 9/16	8 8¾		STK 2630	333			12/7
		1	pm	PL	12 × 1	10 6⅞	98 CUTS 8	3910	301			12/8
		2	pn	PL	12 × 2¾	19 3	74⅞×19:5 CUTS 6	3910	203			12/5
		1	pp	PL	16 × 2¾	54 0	65½×54:2 CUTS 4	3910	204			12/3
		1	ps	PL	12 × 1	10 5¾	98 CUTS 8	3910	301			12/8
		2	pt75	PL	7¾ × ⅜	4 7		STK 3372	527	(BENT)		12/14
		2	pv75	PL	8 × ⅜	4 7		STK 3372	527	(BENT)		12/14
		2	pm57	PL	4 × ⅜	4 11 15/16		3905	605	(FIE)		12/11
		2	pn56	PL	4 × ⅜	4 11 15/16						
		11	pm18	PL	4 × ⅜	4 11 15/16						
		43	pk18	PL	4 × ⅜	4 11 15/16		3905	605	(FIE)		12/11
		4	pa075	PL	11 × ½	0 11		STK 3680	405			12/12
		512			¾ϕ STUDS	0 4		27190	301	AUTO. END WELDED		
		44			⅞ϕ BOLTS	0 24		26661	202	(A325) HEX. HD HEX. NUT		
		44			HARD. WASHERS FOR ⅞ϕ BOLTS			26661	203	(A325)		

SHEET TOTAL

NASHVILLE BRIDGE COMPANY

SHOP ORDER NO. B5725 | WORK ORDER NO. | CONTRACT NO. C6736

COMMONWEALTH OF KENTUCKY DEPT. OF HIGHWAYS

BRIDGE OVER NORTHWESTERN PARKWAY & 22ND ST. JEFFERSON CO.

BILL NO. 81 | DRAWING NO. 81 & 82

FABRICATION BESSEMER PLANT

ITEM | WEIGHTS BY | CHECKED BY

SHIP	SHIPPING MARK	ITEM QUANT	ASSEMBLY MARK	SHAPE	SECTION	FINISHED LENGTH FT. IN.	ORDERED LENGTH FT. IN.	P.O. NO.	ITEM NO.	REMARKS	SPECIF. WEIGHT	AISC WEIGHT
					MATERIAL ASTM-A36 (U.N.)							
ONE	81FG				GIRDER							
		1	pa	PL	32⅛ × 1	5 0		3910	306	PL 61×3:G MATCH CUT 1-EA-pa & pc145		13/4
		1	pb	PL	60 15/16 × ⅜	54 1⅞	61×54:4	3908	437			12/2
		1	pc	PL	60 15/16 × ⅜	54 1¾	61×54:4	3908	437			12/2
		1	pd	PL	33 × 1	5 0		3910	306	PL 61×3:G MATCH CUT 1-EA-pd & pb621		7/2
		1	pf	PL	12 × 9/16	8 8¾		STK 2630	333			12/7
		2	pg	PL	12 × 1½	19 3	88½×19:5 CUTS 7	3910	221			12/6
		1	ph	PL	16 × 1½	54 0	48½×54:2 CUTS 3	3910	223			12/4
		1	pk	PL	12 × 9/16	8 8¾		STK 2630	333			12/7
		1	pm	PL	12 × 1	10 6⅞	98 CUTS 8	3910	301			12/8
		2	pn	PL	12 × 2¾	19 3	74⅞×19:5 CUTS 11	3910	203			12/5
		1	pp	PL	16 × 2¾	54 0	65½×54:2 CUTS 4	3910	204			12/3
		1	ps	PL	12 × 1	10 5¾	98 CUTS 8	3910	301			12/8
		1	pt75	PL	7¾ × ⅜	4 7		STK 3372	527	(BENT)		12/14
		1	pv75	PL	8 × ⅜	4 7		STK 3372	527	(BENT)		12/14
		1	pm57	PL	4 × ⅜	4 11 15/16		3905	605	(FIE)		12/11
		1	pn56	PL	4 × ⅜	4 11 15/16						
		5	pm18	PL	4 × ⅜	4 11 15/16						
		50	pk18	PL	4 × ⅜	4 11 15/16		3905	605	(FIE)		12/11
		4	pa075	PL	11 × ½	0 11		STK 3680	405			12/12
		4	ba11	PL	12 × 1	0 4		3910	305			12/10
		512			¾ϕ STUDS	0 4		27190	301	AUTO. END WELDED		
		22			⅞ϕ BOLTS	0 24		26661	202	(A325) HEX. HD HEX. NUT		
		22			HARD. WASHERS FOR ⅞ϕ BOLTS			26661	203	(A325)		

SHEET TOTAL

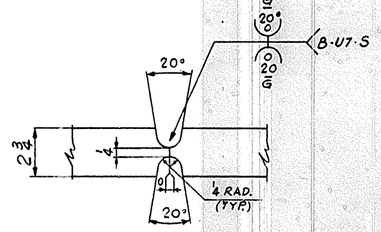

DETAIL F

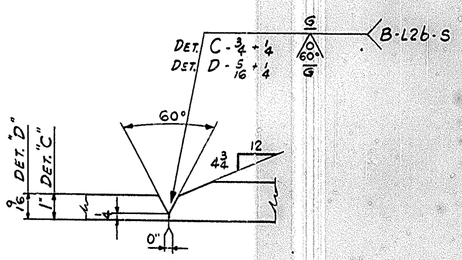

DETAIL "C" & "D"

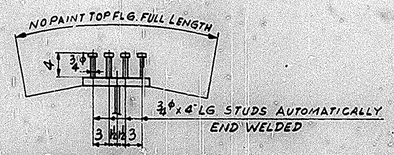

TYP. SECTION THRU TOP FLG.

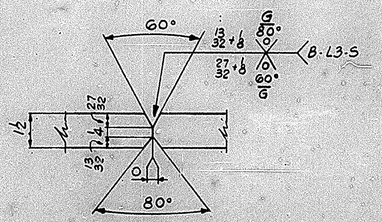

DETAIL E

WORK THIS DWG WITH DWGS. 79, 80, 81

FOR GENERAL NOTES SEE DWG GN1.

MATL. ASTM A36 (UN)

91

GIRDER DETAILS SPAN 6W

BRIDGE OVER NORTHWESTERN PARKWAY & 22ND ST.

DEPT. OF HIGHWAYS COMMONWEALTH OF KENTUCKY

JEFFERSON COUNTY FAP IG4-2(34)1 SPSG-273-1L

CONTRACTOR MATTINGLY BRIDGE CO.

NASHVILLE BRIDGE COMPANY
NASHVILLE, TENN.
BESSEMER PLANT

APPROVED FOR SHOP: WMF 3/10/70 CHIEF DRAFTSMAN; NHK 3/10/70 CHIEF ENGINEER

REVISION NOTES: APPR. 3/10/70

DRAWN BY G.D. DATE 11-21-69
IN CHARGE OF DATA
CHECKED BY VM DATE 12/19/69
DATE PRINTED

BILL OF MATERIAL NO. 79, 80, 81 | CONT. C6736 | S.O. B5725 | DRAWING NO. 82

A. R. ELLIOTT CO. PGH. PA. REORDER # 7887

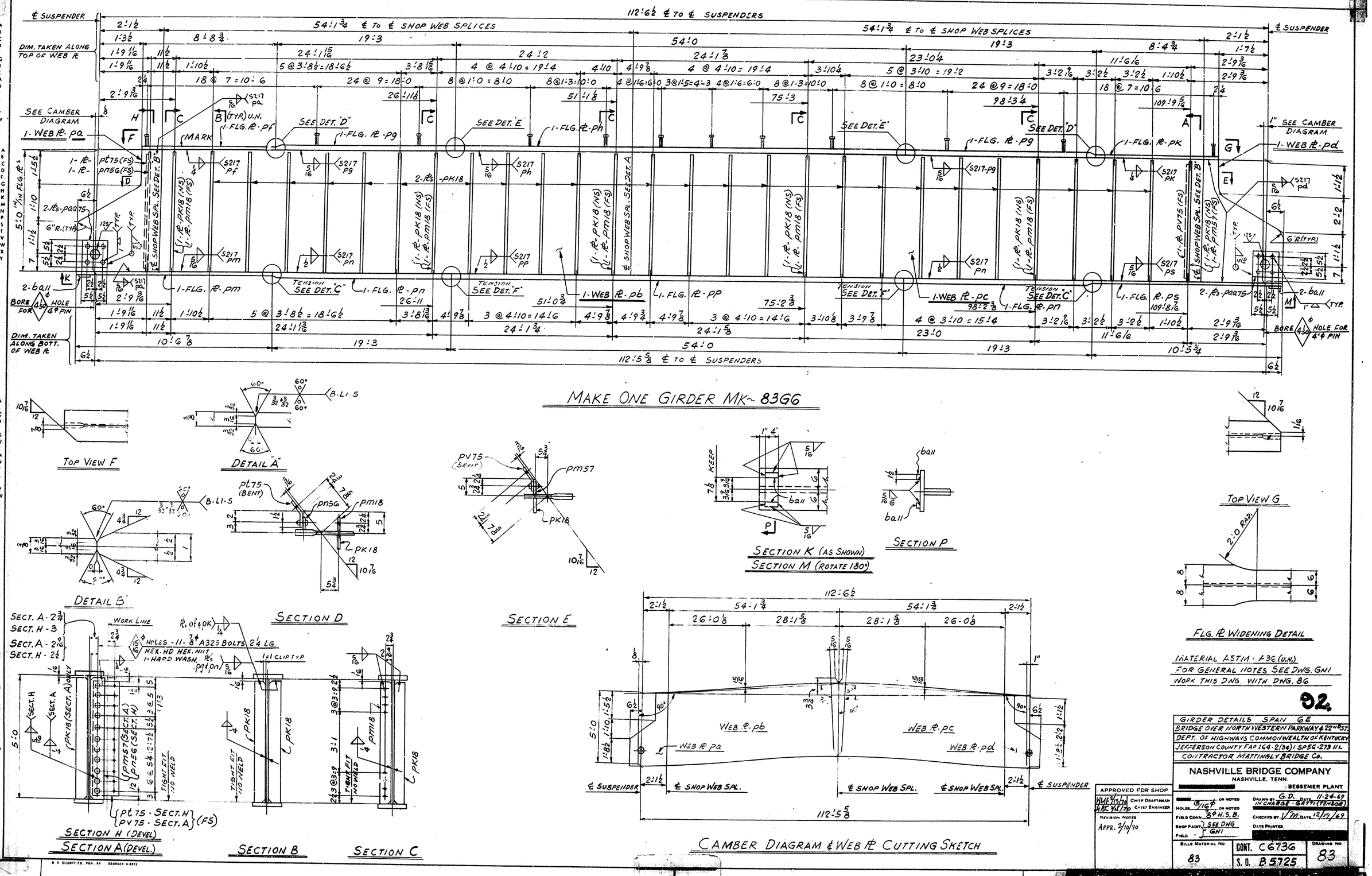

MAKE ONE GIRDER MK~ 83G6

TOP VIEW F

DETAIL "A"

DETAIL B

SECTION D

SECTION E

SECTION K (AS SHOWN)
SECTION M (ROTATE 180°)

SECTION P

TOP VIEW G

FLG. PL WIDENING DETAIL

MATERIAL ASTM - A36 (U.N.)
FOR GENERAL NOTES SEE DWG. GN1
WORK THIS DWG. WITH DWG. 86

SECTION H (DEVEL)
SECTION A (DEVEL)
SECTION B
SECTION C

CAMBER DIAGRAM & WEB PL CUTTING SKETCH

92

GIRDER DETAILS SPAN GE
BRIDGE OVER NORTH WESTERN PARKWAY & 22ND ST.
DEPT. OF HIGHWAYS COMMONWEALTH OF KENTUCKY
JEFFERSON COUNTY FAP 164-2(34) I SP56-273 11L
CONTRACTOR MATTINGLY BRIDGE Co.

NASHVILLE BRIDGE COMPANY
NASHVILLE, TENN.
BESSEMER PLANT

APPROVED FOR SHOP
HWE 7/15/70 CHIEF DRAFTSMAN
JMC 7/15/70 CHIEF ENGINEER
REVISION NOTES
APPR. 2/10/70

HOLES 15/16⌀ OR NOTED
FIELD CONN. 8⌀ H.S.B. OR NOTED
SHOP PAINT SEE DWG GN1
FIELD
DRAWN BY G.D. DATE 11-24-69
IN CHARGE - GATTI (TENNESSEE)
CHECKED BY DATE 12/19/69
DATE PRINTED

BILLS MATERIAL NO 83
CONT. C6736
S.O. B5725
DRAWING NO 83

D. E. ELLIOTT CO. PEN. PF REORDER A 6373

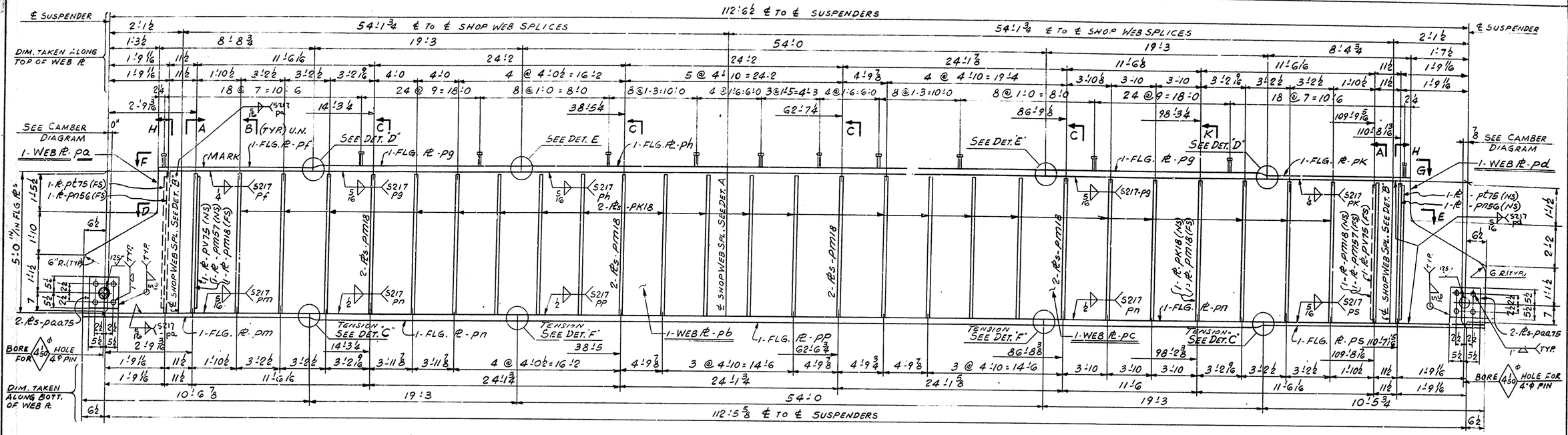

MAKE ONE GIRDER MK- 84H6

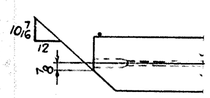

TOP VIEW F

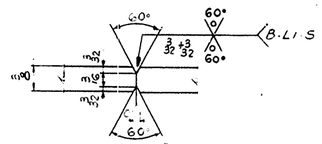

DETAIL A

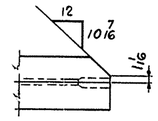

TOP VIEW G

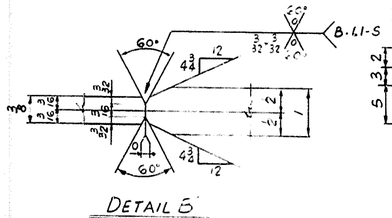

DETAIL B

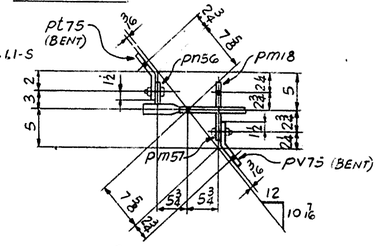

SECTION D

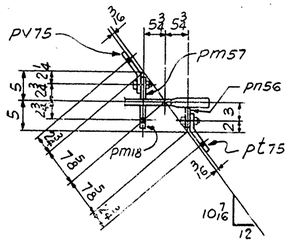

SECTION E

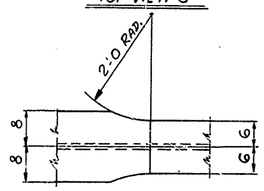

FLG. PL WIDENING DETAIL

MATERIAL ASTM - A36 (U.N.)
FOR GENERAL NOTES SEE DWG. GN1
WORK THIS DWG. WITH DWG. 86

93

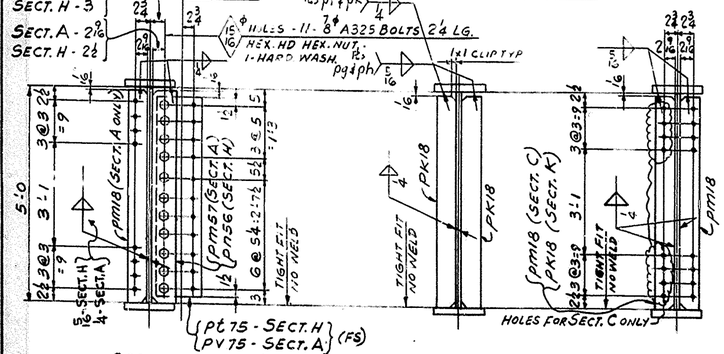

SECTION H (DEVEL)
SECTION A (DEVEL.)
SECTION B
SECTION C&K

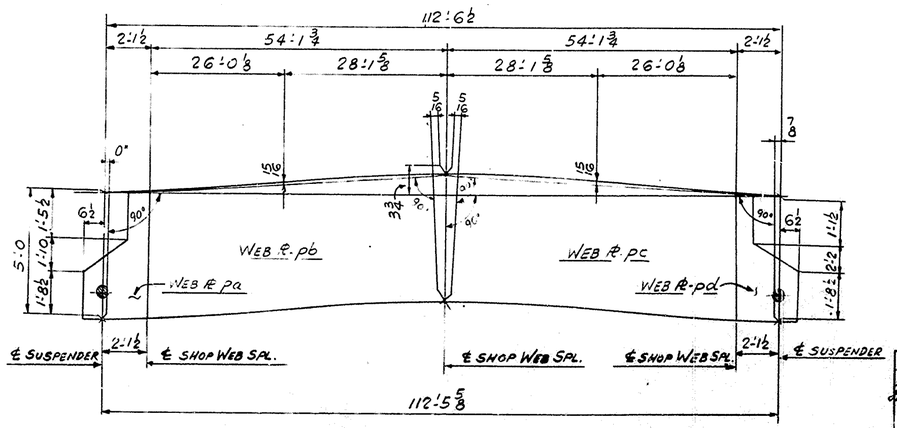

CAMBER DIAGRAM & WEB PL CUTTING SKETCH

APPROVED FOR SHOP	
HMF 7/13/70	CHIEF DRAFTSMAN
AAK 7/13/70	CHIEF ENGINEER
REVISION NOTES	
APPR. 2/10/70	

GIRDER DETAILS SPAN 6E
BRIDGE OVER NORTH WESTERN PARKWAY & 22ND ST.
DEPT. OF HIGHWAYS COMMONWEALTH OF KENTUCKY
JEFFERSON COUNTY FAP 164-2(34) I SP56-273 11L
CONTRACTOR MATTINGLY BRIDGE Co.

NASHVILLE BRIDGE COMPANY
NASHVILLE, TENN.
BESSEMER PLANT

HOLES	15/16ϕ UNLESS OTHERWISE NOTED
FIELD CONN.	8ϕ H.S.B.
SHOP PAINT	SEE DWG GN1
FIELD	
DRAWN BY	G.D. DATE 11-24-69
IN CHARGE	CATT (TENLOW)
CHECKED BY	DATE 12/12/69
DATE PRINTED	
BILL MATERIAL NO.	84
CONT.	C6736
S.O.	B5725
DRAWING NO.	84

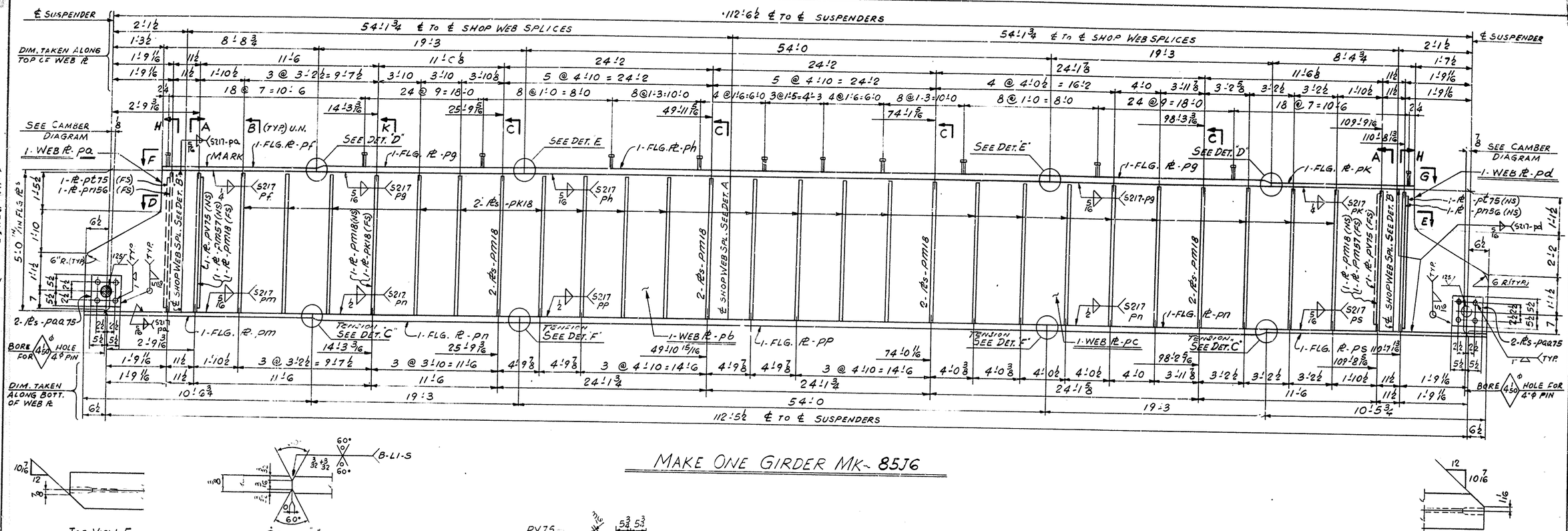

MAKE ONE GIRDER MK- 85J6

TOP VIEW F

DETAIL A

TOP VIEW G

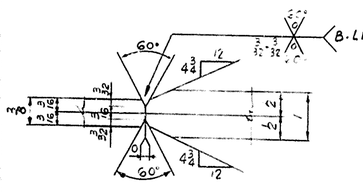

DETAIL 5

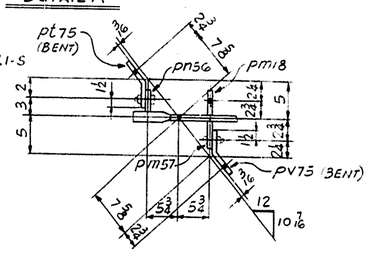

SECTION D

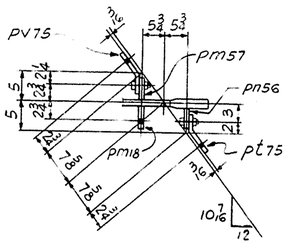

SECTION E

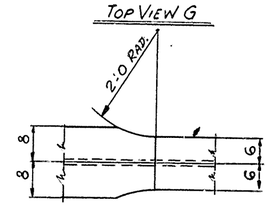

FLG. PL WIDENING DETAIL

MATERIAL ASTM - A36 (U.N.)
FOR GENERAL NOTES SEE DWG. GN1
WORK THIS DWG WITH DWG. 86

94

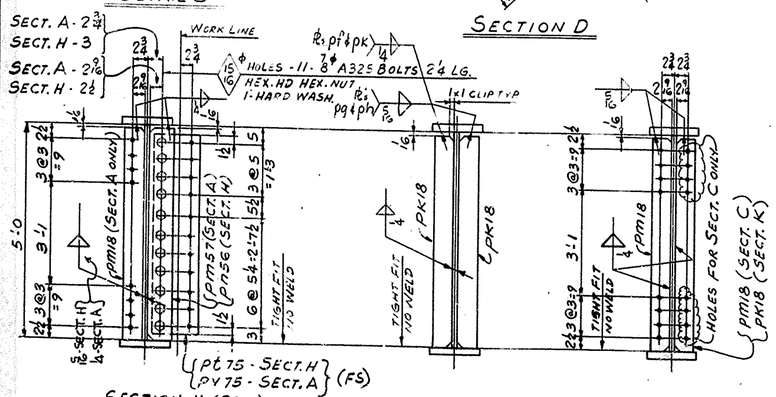

SECTION H (DEVEL)
SECTION A (DEVEL)
SECTION B
SECTION C & K

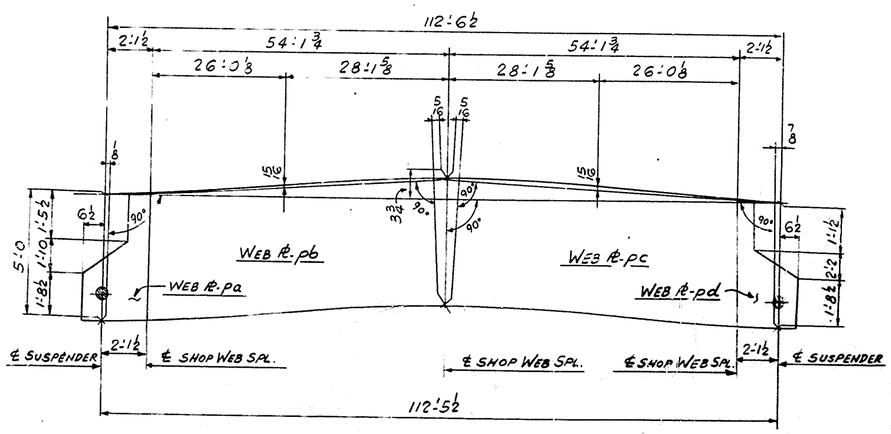

CAMBER DIAGRAM & WEB PL CUTTING SKETCH

GIRDER DETAILS SPAN 6E	
BRIDGE OVER NORTH WESTERN PARKWAY & 22ND ST.	
DEPT. OF HIGHWAYS COMMONWEALTH OF KENTUCKY	
JEFFERSON COUNTY FAP 164 2/3(4): SP56-273 11L	
CONTRACTOR MATTINGLY BRIDGE Co.	
NASHVILLE BRIDGE COMPANY NASHVILLE, TENN. — BESSEMER PLANT	
HOLES 15/16⌀ OR NOTED	DRAWN BY G.D. DATE 11-25-69
FIELD CONN. 8⌀ H.S.B.	CHECKED BY DATE 12/19/69
SHOP PAINT SEE DWG GN1	DATE PRINTED
FIELD	
BILL MATERIAL NO. 85	CONT. C6736 S.D. B5725 — DRAWING NO. 85

APPROVED FOR SHOP
HWF 7/10/70 CHIEF DRAFTSMAN
KRC 7/10/70 CHIEF ENGINEER
REVISION NOTES
APPR. 2/14/70

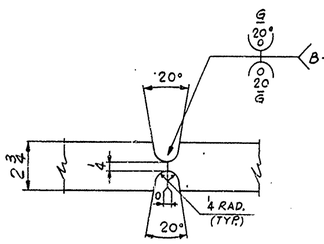

DETAIL F

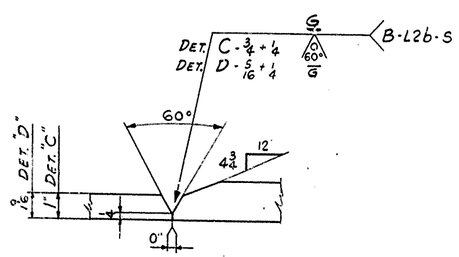

DETAIL "C" & "D"

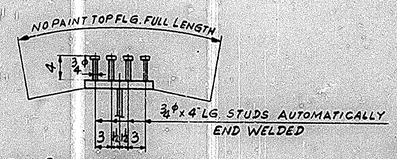

TYP. SECTION THRU TOP FLG.

NASHVILLE BRIDGE COMPANY

SHOP ORDER NO. B5725 — WORK ORDER NO. — CONTRACT NO. C6736

COMMONWEALTH OF KENTUCKY DEPT. OF HIGHWAYS

BRIDGE OVER NORTHWESTERN PARKWAY & 22ND ST. JEFFERSON COUNTY

BILL NO. 83 — DRAWING NO. 83 & 86

FABRICATION BESSEMER PLANT

ITEM — WEIGHTS BY — CHECKED BY

SHIP	SHIPPING MARK	ITEM QUANT	ASSEMBLY MARK	SHAPE	SECTION	FINISHED LENGTH FT-IN	ORDERED LENGTH FT-IN	P.O. NO.	ITEM NO.	REMARKS	SPECIF. WEIGHT	A.I.S.C. WEIGHT
					MATERIAL ASTM-A36 (U.N.)							
ONE	83G6				GIRDER							
		1	pa	PL	32⅛ x 1	5 0		3910	306	PL G1 x 3'-6 MATCH CUT 1-EA-pa & pb141		13/4
		1	pb	PL	60 15/16 x ⅜	54 1¾	61 x 54'-4	3908	437			12/2
		1	pc	PL	60 15/16 x ⅜	54 1¾	61 x 54'-4	3908	437	PL G1 x 3'-6 MATCH CUT 1-EA-pc & pb22		12/2
		1	pd	PL	33 x 1	5 0		3910	306			7/2
		1	pf	PL	12 x 7/16	8 8¾		STK 2630	333			12/7
		2	pg	PL	12 x 1½	19 3	85½ x 19'-5 CUTS 7	3910	221			12/6
		1	ph	PL	16 x 1½	54 0	48½ x 54'-2 CUTS 3	3910	223			12/4
		1	pk	PL	12 x 7/16	8 4¾		STK 2630	333			12/7
		1	pm	PL	12 x 1	10 6¾	98 CUTS 8	3910	301			12/8
		2	pn	PL	12 x 2¾	19 3	62 x 19'-5 CUTS 5	3910	205			12/5
		1	pp	PL	16 x 2¾	54 0	65½ x 54'-2 CUTS 4	3910	204			12/3
		1	ps	PL	12 x 1	10 5¾	98 CUTS 8	3910	301			12/8
		1	pt75	PL	7¾ x ⅜	4 7		STK 3372	527	(BENT)		12/14
		1	pv75	PL	8 x ⅜	4 7		STK 3372	527	(BENT)		12/14
		1	pm57	PL	4 x ⅜	4 11 15/16		3905	605	(FIE)		12/11
		1	pn56	PL	4 x ⅜	4 11 15/16						
		5	pm18	PL	4 x ⅜	4 11 15/16						
		50	pk18	PL	4 x ⅜	4 11 15/16		3905	605	(FIE)		12/11
		4	pq075	PL	11 x ½	0 11		STK 3680	405			12/12
		4	bo11	BAR	12 x 1	0 4		3910	305			12/13
		512			¾φ STUDS	0 4		27120	301	AUTO. END WELDED		
		22			⅞φ BOLTS	0 24		2661	202	(A325) HEX. HD HEX NUT		
		22			HARD. WASHERS FOR ⅞φ BOLTS			2661	203	(A325)		

SHEET TOTAL

NASHVILLE BRIDGE COMPANY

SHOP ORDER NO. B5725 — WORK ORDER NO. — CONTRACT NO. C6736

COMMONWEALTH OF KENTUCKY DEPT. OF HIGHWAYS

BRIDGE OVER NORTHWESTERN PARKWAY & 22ND ST. JEFFERSON COUNTY

BILL NO. 84 — DRAWING NO. 84 & 86

FABRICATION BESSEMER PLANT

ITEM — WEIGHTS BY — CHECKED BY

SHIP	SHIPPING MARK	ITEM QUANT	ASSEMBLY MARK	SHAPE	SECTION	FINISHED LENGTH FT-IN	ORDERED LENGTH FT-IN	P.O. NO.	ITEM NO.	REMARKS	SPECIF. WEIGHT	A.I.S.C. WEIGHT
					MATERIAL ASTM-A36 (U.N.)							
ONE	84G6				GIRDER							
		1	pa	PL	32 x 1	5 0		3910	306	PL G1 x 3'-6 MATCH CUT 1-EA-pa & pc146		13/4
		1	pb	PL	60 15/16 x ⅜	54 1¾	61 x 54'-4	3908	437			12/2
		1	pc	PL	60 15/16 x ⅜	54 1¾	61 x 54'-4	3908	437	PL G1 x 3'-6 MATCH CUT 1-EA-pc & pb23		12/2
		1	pd	PL	32⅛ x 1	5 0		3910	306			7/2
		1	pf	PL	12 x 7/16	8 8¾		STK 2630	333			12/7
		2	pg	PL	12 x 1½	19 3	85½ x 19'-5 CUTS 7	3910	221			12/6
		1	ph	PL	16 x 1½	54 0	48½ x 54'-2 CUTS 3	3910	223			12/4
		1	pk	PL	12 x 7/16	8 4¾		STK 2630	333			12/7
		1	pm	PL	12 x 1	10 6¾	98 CUTS 8	3910	301			12/8
		2	pn	PL	12 x 2¾	19 3	62 x 19'-5 CUTS 5	3910	205			12/5
		1	pp	PL	16 x 2¾	54 0	65½ x 54'-2 CUTS 4	3910	204			12/3
		1	ps	PL	12 x 1	10 5¾	98 CUTS 8	3910	301			12/8
		2	pt75	PL	7¾ x ⅜	4 7		STK 3372	527	(BENT)		12/14
		2	pv75	PL	8 x ⅜	4 7		STK 3372	527	(BENT)		12/14
		2	pm57	PL	4 x ⅜	4 11 15/16		3905	605	(FIE)		12/11
		2	pn56	PL	4 x ⅜	4 11 15/16						
		11	pm18	PL	4 x ⅜	4 11 15/16						
		43	pk18	PL	4 x ⅜	4 11 15/16		3905	605	(FIE)		12/11
		4	pq075	PL	11 x ½	0 11		STK 3680	405			12/12
		512			¾φ STUDS	0 4		27120	301	AUTO. END WELDED		
		44			⅞φ BOLTS	0 24		2661	202	(A325) HEX. HD HEX NUT		
		44			HARD. WASHERS FOR ⅞φ BOLTS			2661	203	(A325)		

SHEET TOTAL

NASHVILLE BRIDGE COMPANY

SHOP ORDER NO. B5725 — WORK ORDER NO. — CONTRACT NO. C6736

COMMONWEALTH OF KENTUCKY DEPT. OF HIGHWAYS

BRIDGE OVER NORTHWESTERN PARKWAY & 22ND ST. JEFFERSON CO.

BILL NO. 85 — DRAWING NO. 85 & 86

FABRICATION BESSEMER PLANT

ITEM — WEIGHTS BY — CHECKED BY

SHIP	SHIPPING MARK	ITEM QUANT	ASSEMBLY MARK	SHAPE	SECTION	FINISHED LENGTH FT-IN	ORDERED LENGTH FT-IN	P.O. NO.	ITEM NO.	REMARKS	SPECIF. WEIGHT	A.I.S.C. WEIGHT
					MATERIAL ASTM-A36 (U.N.)							
ONE	85G6				GIRDER							
		1	pa	PL	32⅛ x 1	5 0		3910	306	PL G1 x 3'-6 MATCH CUT 1-EA-pa & pc148		13/4
		1	pb	PL	60 15/16 x ⅜	54 1¾	61 x 54'-4	3908	437			12/2
		1	pc	PL	60 15/16 x ⅜	54 1¾	61 x 54'-4	3908	437	PL G1 x 3'-6 MATCH CUT 1-EA-pc & pb26		12/2
		1	pd	PL	32⅛ x 1	5 0		3910	306			7/2
		1	pf	PL	12 x 7/16	8 8¾		STK 2630	333			12/7
		2	pg	PL	12 x 1½	19 3	85½ x 19'-5 CUTS 7	3910	221			12/6
		1	ph	PL	16 x 1½	54 0	48½ x 54'-2 CUTS 3	3910	223			12/4
		1	pk	PL	12 x 7/16	8 4¾		STK 2630	333			12/7
		1	pm	PL	12 x 1	10 6¾	98 CUTS 8	3910	301			12/8
		2	pn	PL	12 x 2¾	19 3	62 x 19'-5 CUTS 5	3910	205			12/5
		1	pp	PL	16 x 2¾	54 0	65½ x 54'-2 CUTS 4	3910	204			12/3
		1	ps	PL	12 x 1	10 5¾	98 CUTS 8	3910	301			12/8
		2	pt75	PL	7¾ x ⅜	4 7		STK 3372	527	(BENT)		12/14
		2	pv75	PL	8 x ⅜	4 7		STK 3372	527	(BENT)		12/14
		2	pm57	PL	4 x ⅜	4 11 15/16		3905	605	(FIE)		12/11
		2	pn56	PL	4 x ⅜	4 11 15/16						
		11	pm18	PL	4 x ⅜	4 11 15/16						
		43	pk18	PL	4 x ⅜	4 11 15/16		3905	605	(FIE)		12/11
		4	pq075	PL	11 x ½	0 11		STK 3680	405			12/12
		512			¾φ STUDS	0 4		27120	301	AUTO. END WELDED		
		44			⅞φ BOLTS	0 24		2661	202	(A325) HEX. HD HEX NUT		
		44			HARD. WASHERS FOR ⅞φ BOLTS			2661	203	(A325)		

SHEET TOTAL

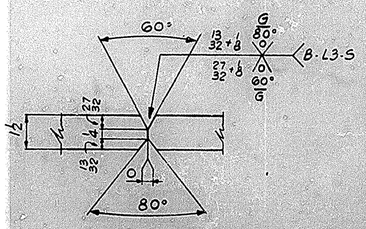

DETAIL E

WORK THIS DWG WITH DWGS. 83, 84 & 85

FOR GENERAL NOTES SEE DWG GN1

MATL ASTM A36 (U.N.)

95

GIRDER DETAILS SPAN 6E

BRIDGE OVER NORTHWESTERN PARKWAY & 22ND ST.

DEPT. OF HIGHWAYS COMMONWEALTH OF KENTUCKY

JEFFERSON COUNTY FAP 164; 2(34); SP56-275-114

CONTRACTOR MATTINGLY-BRIDGE CO.

NASHVILLE BRIDGE COMPANY
NASHVILLE, TENN.
BESSEMER PLANT

APPROVED FOR SHOP — CHIEF DRAFTSMAN — CHIEF ENGINEER

REVISION NOTES: APPR. 7/10/70

HOLES: 15/16φ OR NOTED — ⅞φ H.S.B. OR NOTED

FIELD CONN: SEE GN1

SHOP PAINT: SEE GN1

FIELD:

DRAWN BY: G.D. DATE: 11-25-67

IN CHARGE-BATTY (TEN-CO)

CHECKED BY: YM DATE: 12/4/67

DATE PRINTED:

BILL MATERIAL NO	CONT.	DRAW. NO.
83, 84, 85	C6736 S.O. B5725	86

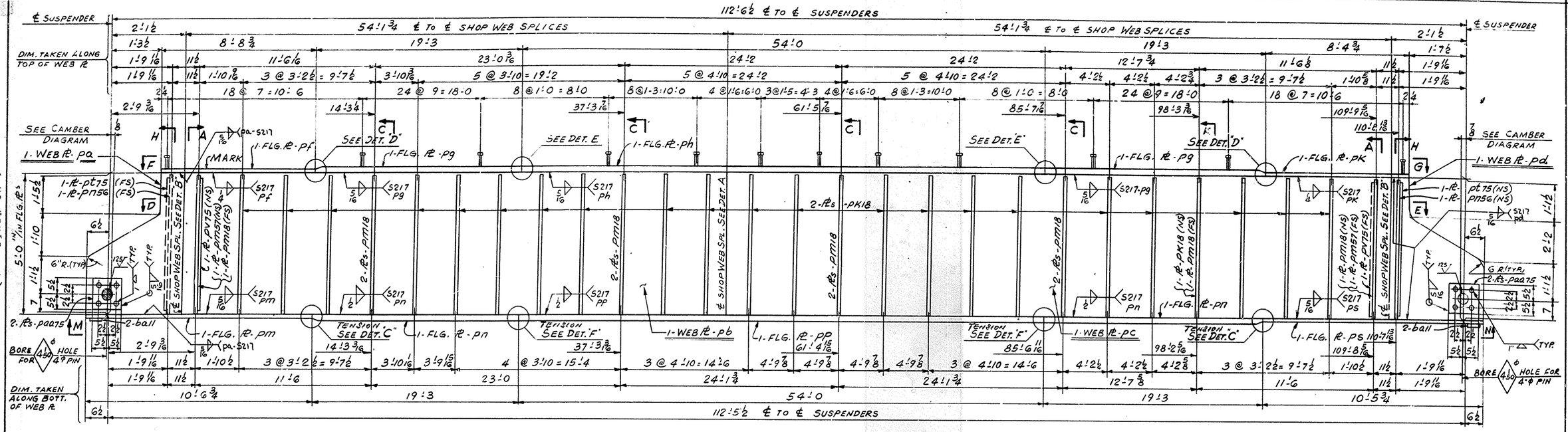

MAKE ONE GIRDER MK~ 87K6

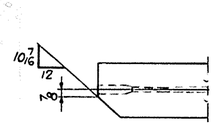
TOP VIEW F

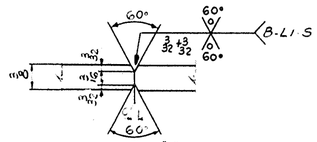
DETAIL "A"

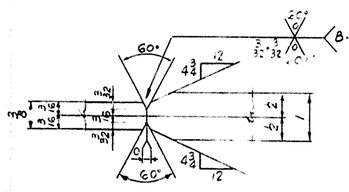
DETAIL B

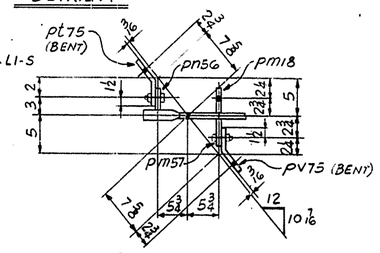
SECTION D

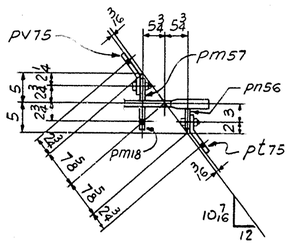
SECTION E

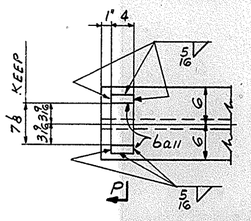
SECTION M (AS SHOWN)
SECTION N (ROTATE 180°)

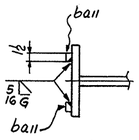
SECTION P

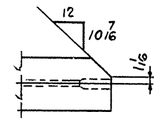
TOP VIEW G

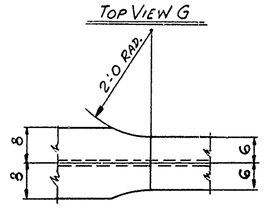
FLG. PL WIDENING DETAIL

MATERIAL ASTM - A36 (U.N.)
FOR GENERAL NOTES SEE DWG. GN1
WORK THIS DWG. WITH DWG. 89

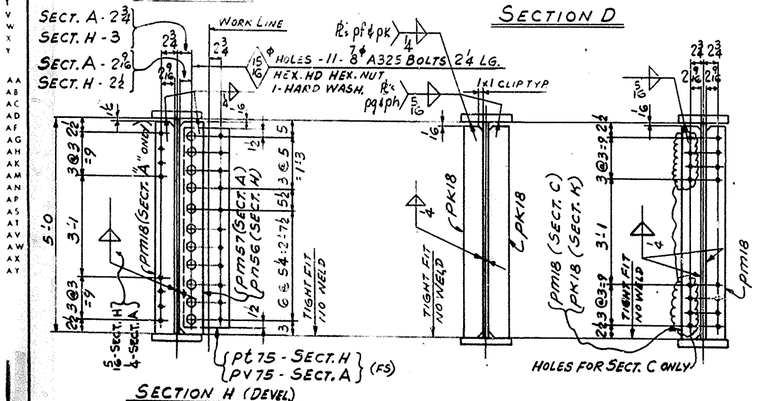
SECTION H (DEVEL)
SECTION A (DEVEL.)
SECTION B
SECTION C & K

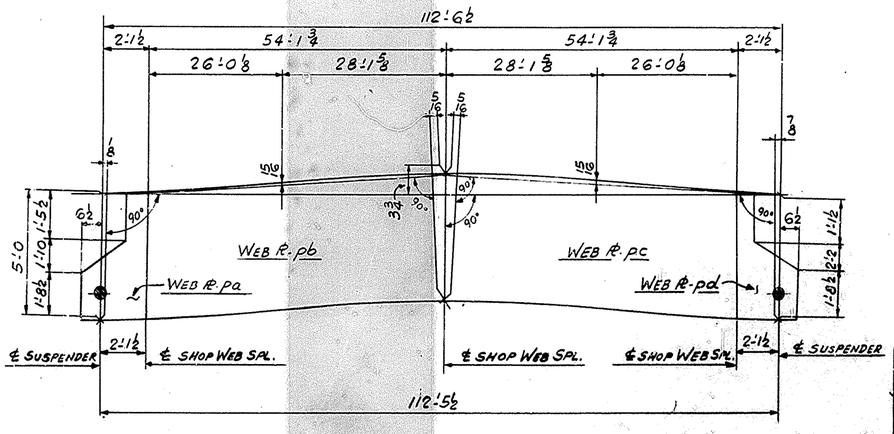
CAMBER DIAGRAM & WEB PL CUTTING SKETCH

96

GIRDER DETAILS SPAN 6E
BRIDGE OVER NORTH WESTERN PARKWAY & 22ND ST.
DEPT. OF HIGHWAYS COMMONWEALTH OF KENTUCKY
JEFFERSON COUNTY FAP 164-2(34) I SP56-273 I.L.
CONTRACTOR MATTINGLY BRIDGE Co.

NASHVILLE BRIDGE COMPANY
NASHVILLE, TENN.
BESSEMER PLANT

APPROVED FOR SHOP
WMF 3/10/70 CHIEF DRAFTSMAN
CHIEF ENGINEER
REVISION NOTES
APPR. 3/10/70

DRAWN BY G.D. DATE 11-25-69
IN CHARGE - GAM (12-1-69)
CHECKED BY YM DATE 12/19/69
DATE PRINTED
BILL MATERIAL NO. 87
CONT. C6736
S.O. 89785
DRAWING NO. 87

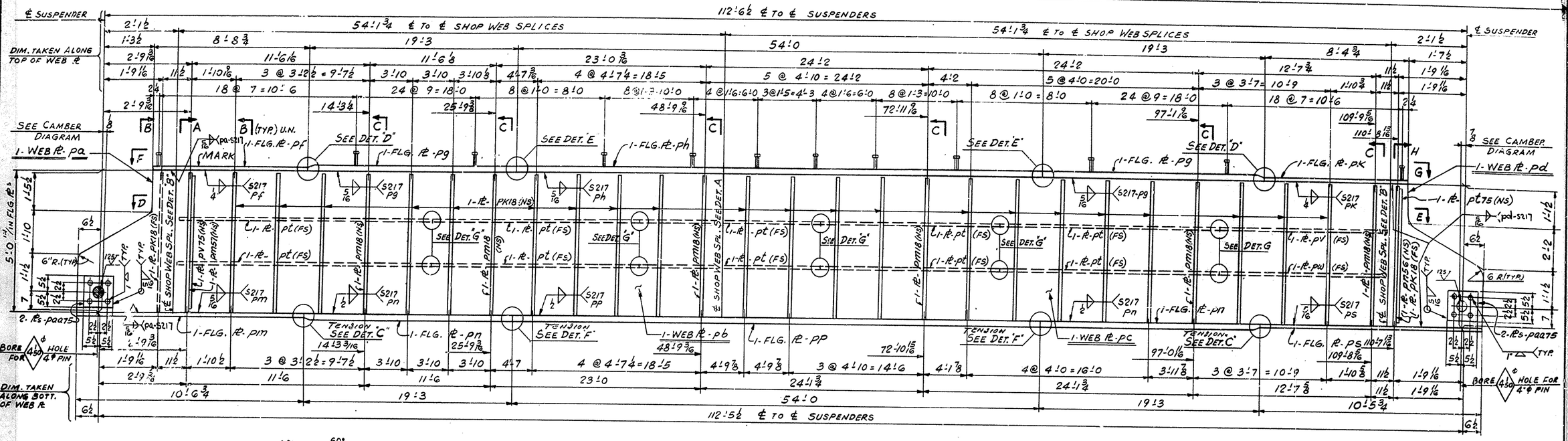

MAKE ONE GIRDER MK-88L6

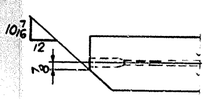

TOP VIEW F

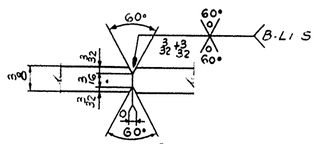

DETAIL 'A'

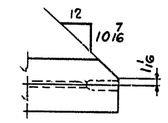

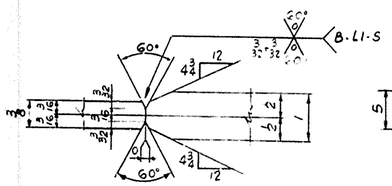

DETAIL 'B'

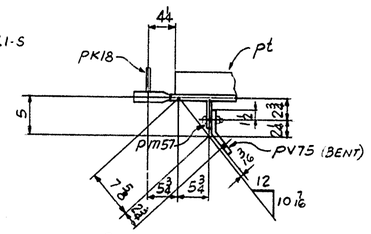

SECTION D

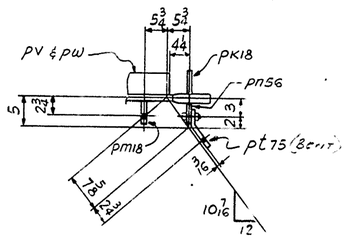

SECTION E

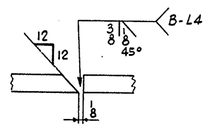

DETAIL G

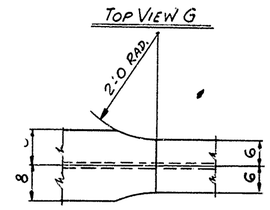

TOP VIEW G

FLG. ℞ WIDENING DETAIL

MATERIAL ASTM - A36 (U.N.)
FOR GENERAL NOTES SEE DWG. GN1
WORK THIS DWG. WITH DWG. 89

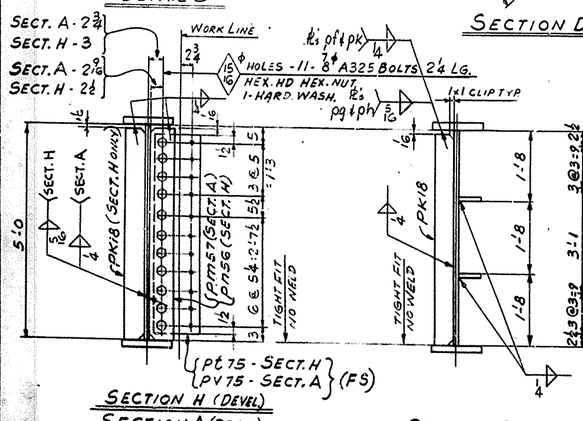

SECTION H (DEVEL.)
SECTION A (DEVEL.)

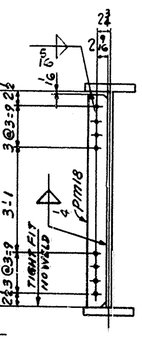

SECTION B

SECTION C

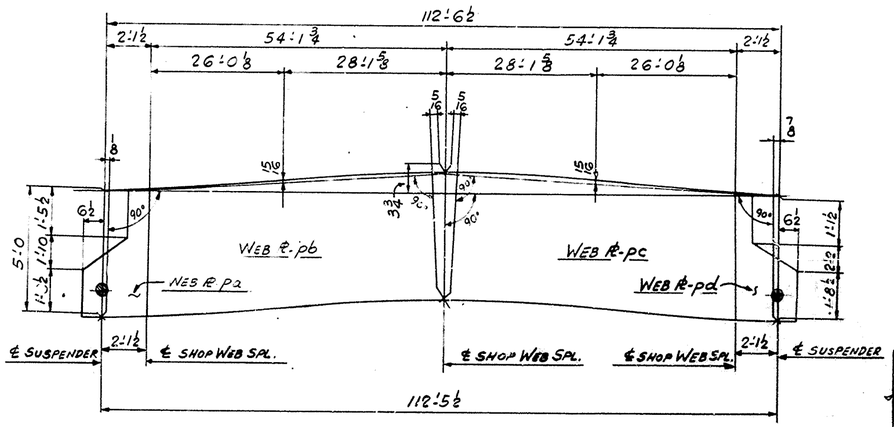

CAMBER DIAGRAM & WEB ℞ CUTTING SKETCH

APPROVED FOR SHOP
Chief Draftsman
Chief Engineer
Revision Notes
APPR. 2/10/70

GIRDER DETAILS SPAN GE
BRIDGE OVER NORTH WESTERN PARKWAY & 22ND ST.
DEPT. OF HIGHWAYS COMMONWEALTH OF KENTUCKY
JEFFERSON COUNTY FAP 164-2(34) I SP56-273 IL
CONTRACTOR MATTINGLY BRIDGE Co.

NASHVILLE BRIDGE COMPANY
NASHVILLE, TENN. BESSEMER PLANT

Drawn by G.D. Date 11-26-69
In Charge - Gatti (Vinson)
Checked by Date 12/17/69
Date Printed

Bills Material No. 88
CONT. C6736
S.O. B5725
Drawing No. 88

NASHVILLE BRIDGE COMPANY

SHOP ORDER NO. B 5725 | WORK ORDER NO. | CONTRACT NO. C 6736

COMMONWEALTH OF KENTUCKY DEPT. OF HIGHWAYS

BRIDGE OVER NORTH WESTERN PARKWAY & 22ND ST. JEFFERSON COUNTY

FABRICATION BESSEMER PLANT

BILL NO. 87 | DRAWING NO. 87 & 89

ITEM | WEIGHTS BY | CHECKED BY

SHIP	SHIPPING MARK	ITEM NO.	ASSEMBLY MARK	SECTION	FINISHED LENGTH	ORDERED LENGTH	ITEM NO.	REMARKS	TRUCK NO.	BILL WEIGHT
				MATERIAL ASTM-A36 (U.N.)						
ONE 87KG				GIRDER						
		1	pa	PL 32⅛ × 1	5 0		3910 306	PL 61 × 3·16 MATCH CUT 1-EA-pa & pa98		13/4
		1	pb	PL 60 15/16 × ⅜	54 1¾	61 × 54·14	3908 437			12/2
		1	pc	PL 60 15/16 × ⅜	54 1¾	61 × 54·14	3908 437			12/2
		1	pd	PL 32⅛ × 1	5 0		3910 306	PL 61 × 3·16 MATCH CUT 1-EA-pa & pb25		7/2
		1	pf	PL 12 × 9/16	8 8¾		STK 2630 333			12/7
		2	pg	PL 12 × 1½	19 3	65½ × 19·5 CUTS 7	3910 221			12/6
		1	ph	PL 16 × 1½	54 0	68½ × 54·12 CUTS 3	3910 223			12/14
		1	pK	PL 12 × 9/16	8 4¾		STK 2630 333			12/7
		1	pm	PL 12 × 1	10 6¾	98 CUTS 8	3910 301			12/8
		2	pn	PL 12 × 2¾	19 3	62 × 19·5 CUTS 5	3910 205			12/15
		1	pp	PL 16 × 2¾	54 0	65½ × 54·12 CUTS 4	3910 204			12/13
		1	ps	PL 12 × 1	10 5¾	98 CUTS 8	3910 301			12/8
		2	pt75	PL 7¾ × ⅜	4 7		STK 3372 527	(BENT)		12/14
		2	pv75	PL 8 × ⅜	4 7		STK 3372 527	(BENT)		12/14
		2	pm57	PL 4 × ⅜	4 11 15/16		3905 605	(FIE)		12/10
		2	pn56	PL 4 × ⅜	4 11 15/16					
		11	pm118	PL 4 × ⅜	4 11 15/16					
		43	pK18	PL 4 × ⅜	4 11 15/16		3905 605	(FIE)		12/11
		4	pa075	PL 11 × ½	0 11		STK 3680 405			12/12
		4	ba11	BAR ½ × 1	0 4		3910 305			12/13
		512		¾ ϕ STUDS	0 4		27120 301	AUTO. END WELDED		
		44		⅞ ϕ BOLTS	0 24		26661 202	(A325) HEX. HD HEX. NUT		
		44		HARD. WASHERS FOR ⅞ ϕ BOLTS			26661 203	(A325)		

SHEET TOTAL

NASHVILLE BRIDGE COMPANY

SHOP ORDER NO. B 5725 | WORK ORDER NO. | CONTRACT NO. C 6736

COMMONWEALTH OF KENTUCKY DEPT. OF HIGHWAYS

BRIDGE OVER NORTH WESTERN PARKWAY & 22ND ST. JEFFERSON CO.

FABRICATION BESSEMER PLANT

BILL NO. 88 | DRAWING NO. 88 & 89

ITEM | WEIGHTS BY | CHECKED BY

SHIP	SHIPPING MARK	ITEM NO.	ASSEMBLY MARK	SECTION	FINISHED LENGTH	ORDERED LENGTH	ITEM NO.	REMARKS	TRUCK NO.	BILL WEIGHT
				MATERIAL ASTM-A36 (U.N.)						
ONE 88KG				GIRDER						
		1	pa	PL 32⅛ × 1	5 0		3910 306	PL 61 × 3·16 MATCH CUT 1-EA-pa & pa97		13/4
		1	pb	PL 60 15/16 × ⅜	54 1¾	61 × 54·14	3908 437			12/2
		1	pc	PL 60 15/16 × ⅜	54 1¾	61 × 54·14	3908 437			12/2
		1	pd	PL 32⅛ × 1	5 0		3910 306	PL 61 × 3·16 MATCH CUT 1-EA-pa & pb25		7/2
		1	pf	PL 12 × 9/16	8 8¾		STK 2630 333			12/7
		2	pg	PL 12 × 1½	19 3	65½ × 19·5 CUTS 7	3910 221			12/6
		1	ph	PL 16 × 1½	54 0	68½ × 54·12 CUTS 3	3910 223			12/14
		1	pK	PL 12 × 9/16	8 4¾		STK 2630 333			12/7
		1	pm	PL 12 × 1	10 6¾	98 CUTS 8	3910 301			12/8
		2	pn	PL 12 × 2¾	19 3	62 × 19·5 CUTS 5	3910 205			12/15
		1	pp	PL 16 × 2¾	54 0	65½ × 54·12 CUTS 4	3910 204			12/13
		1	ps	PL 12 × 1	10 5¾	98 CUTS 8	3910 301			12/8
		1	pt75	PL 7¾ × ⅜	4 7		STK 3372 527	(BENT)		12/14
		1	pv75	PL 8 × ⅜	4 7		STK 3372 527	(BENT)		12/14
		1	pn56	PL 4 × ⅜	4 11 15/16		3905 605	(FIE)		12/10
		1	pm57	PL 4 × ⅜	4 11 15/16					
		6	pm118	PL 4 × ⅜	4 11 15/16					
		23	pK18	PL 4 × ⅜	4 11 15/16		3905 605	(FIE)		12/11
		10	pt	PL 4 × ⅜	20 0		605			12/10
		1	pv	PL 4 × ⅜	8 11 15/16					12/10
		1	pw	PL 4 × ⅜	8 1⅜		3905 605			12/10
		4	pa075	PL 11 × ½	0 11		STK 3680 405			12/12
		512		¾ ϕ STUDS	0 4		27120 301	AUTO. END WELDED		
		22		⅞ ϕ BOLTS	0 24		26661 202	(A325) HEX. HD HEX. NUT		
		22		HARD. WASHERS FOR ⅞ ϕ BOLTS			26661 203	(A325)		

SHEET TOTAL

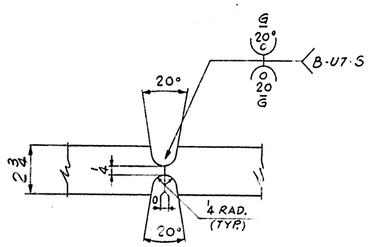

DETAIL F

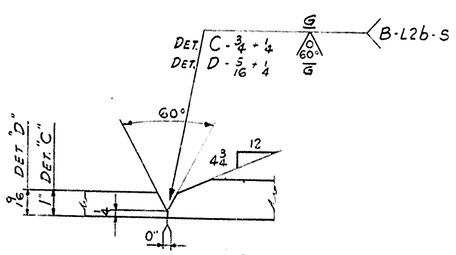

DETAIL "C" & "D"

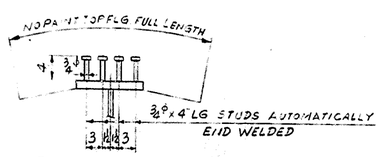

TYP. SECTION THRU TOP FLG

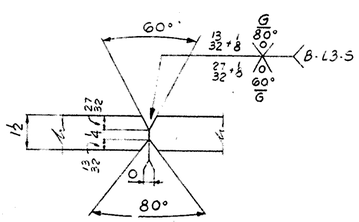

DETAIL E

WORK THIS DWG WITH DWGS. 87 & 88

FOR GENERAL NOTES SEE DWG GN1

MATL ASTM A36 (UN)

93

GIRDER DETAILS SPAN GE

BRIDGE OVER NORTH WESTERN PARKWAY & 22ND ST.

DEPT OF HIGHWAYS COMMONWEALTH OF KENTUCKY

JEFFERSON COUNTY / FAP IG4-2(34) / SP 56-273-114

CONTRACTOR MATTINGLY BRIDGE CO.

NASHVILLE BRIDGE COMPANY
NASHVILLE, TENN
BESSEMER PLANT

APPROVED FOR SHOP: WMF 2/10/70 CHIEF DRAFTSMAN; WMF 2/10/70 CHIEF ENGINEER

REVISION NOTES: APPR. 2/10/70

HOLES 15/16 ϕ OR NOTED; 13/16 ϕ OR NOTED

FIELD CONN. ⅞ H.S.B.

SHOP PAINT SEE GN1

FIELD

DRAWN BY G.D. DATE 11-26-69

IN CHARGE GATPI (PENSON)

CHECKED BY DATE 12/13/69

DATE PRINTED

BILLS MATERIAL NO. 87 & 88 | CONT. C6736 | S.O. B5725 | DRAWING NO. 89

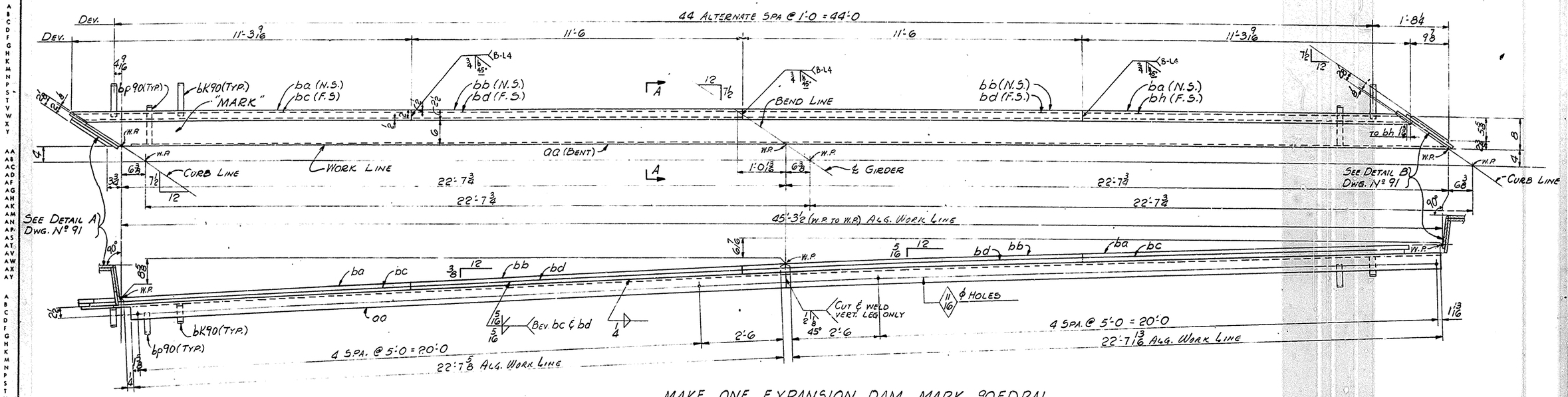

MAKE ONE EXPANSION DAM MARK 90EDRA1

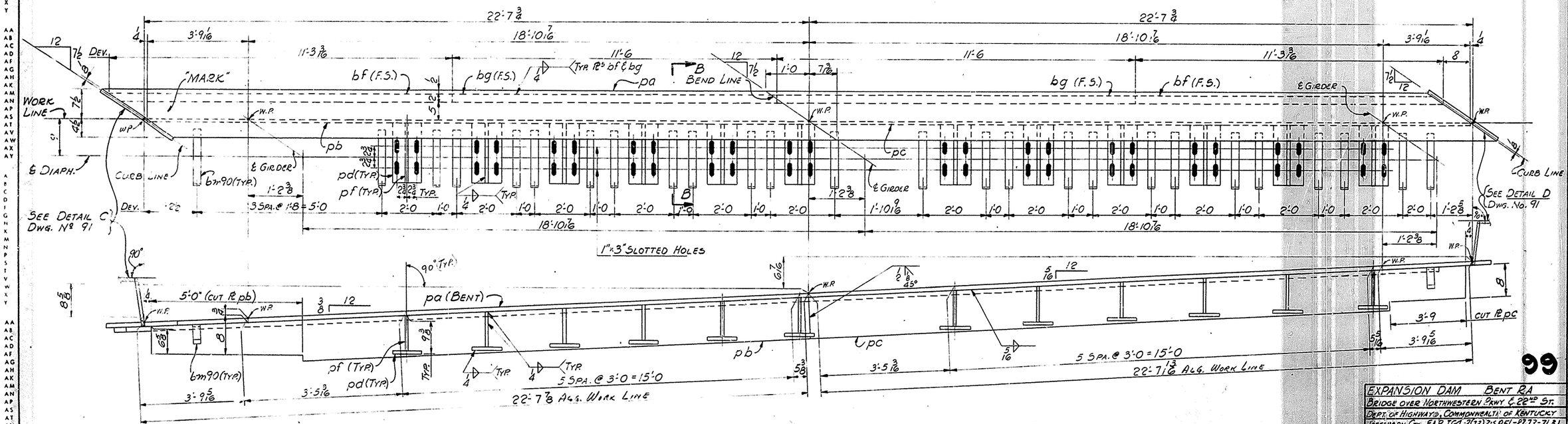

MAKE ONE EXPANSION DAM MARK 90EDRA2

NOTES:
ALL MATERIAL ASTM A36.
FOR GENERAL NOTES SEE DWG. GN1
EXPANSION DAMS ARE TO BE ASSEMBLED IN THE SHOP IN THEIR RELATIVE FINAL POSITION AND INSPECTED FOR FIT.
WORK THIS DWG. WITH DWG. 91.

99

EXPANSION DAM BENT RA
BRIDGE OVER NORTHWESTERN PKWY & 22ND ST.
DEPT. OF HIGHWAYS, COMMONWEALTH OF KENTUCKY
JEFFERSON CTY., F.A.P. IG4-2(33)2;3 PSL-P273-7181
CONTRACTOR: MATTINGLY BRIDGE CO.

NASHVILLE BRIDGE COMPANY
NASHVILLE, TENN.
BESSEMER PLANT

APPROVED FOR SHOP
NWF 1/16/70 CHIEF DRAFTSMAN
CHIEF ENGINEER
REVISION NOTES
APPR. 3/12/70

HOLES A3 UNLESS NOTED
FIELD CONN. 3/8
SHOP PAINT SEE GN1
FIELD

DRAWN BY J.B. DATE 11/26/69
IN CHARGE: GATTI (TENSOR)
CHECKED BY VM DATE 12/3/69
DATE PRINTED

BILL MATERIAL NO. 90
CONT. CG736
S.N.B. 5728
DRAWING NO. 90

B. K. ELLIOTT CO. PGH., PA. REORDER A-8973

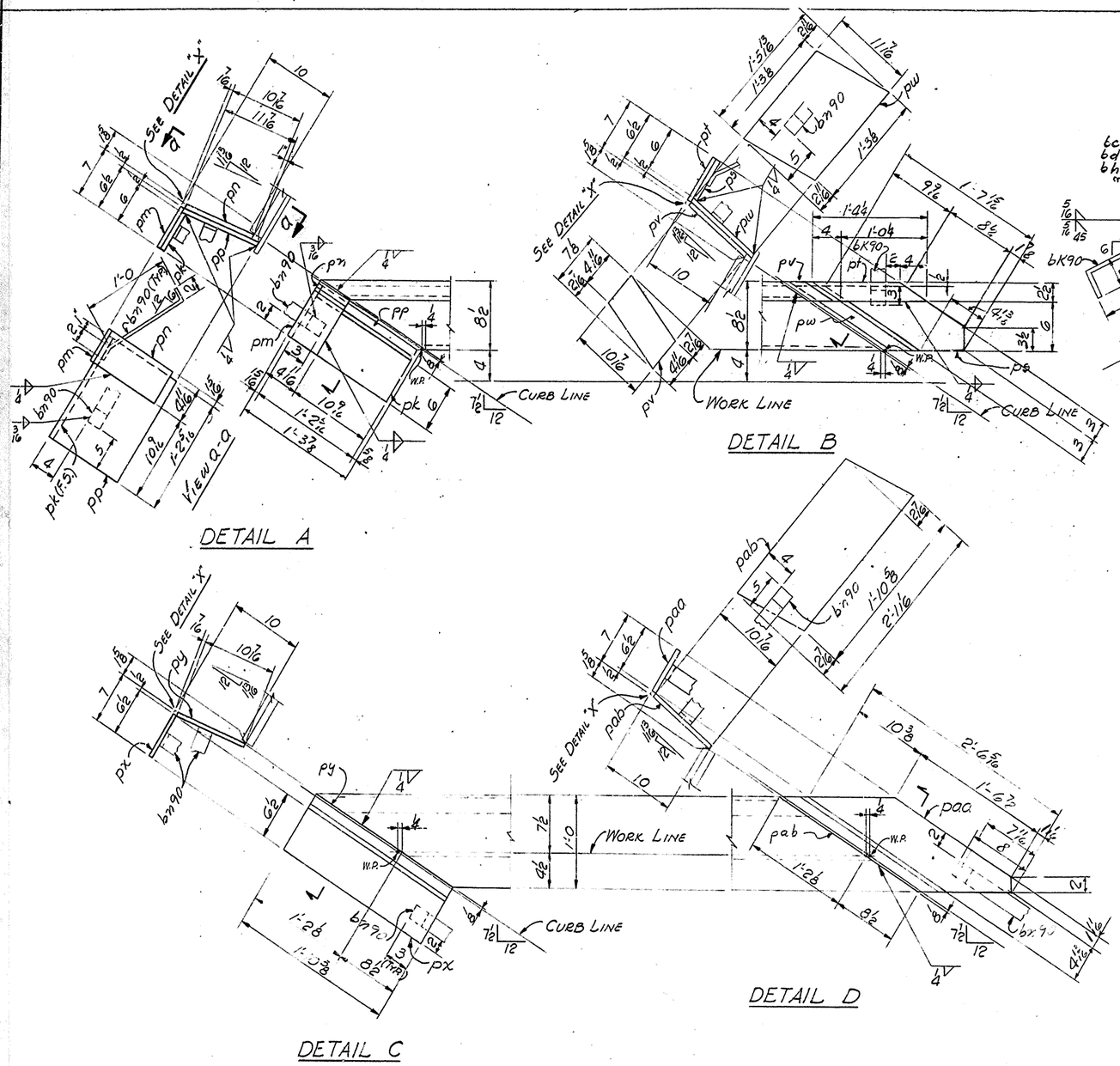

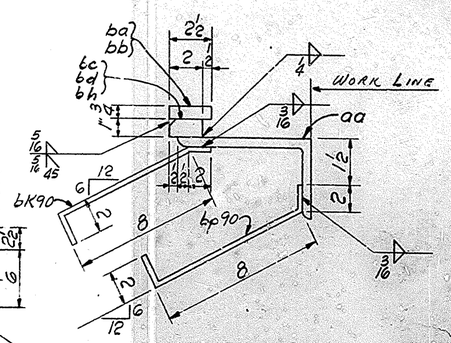

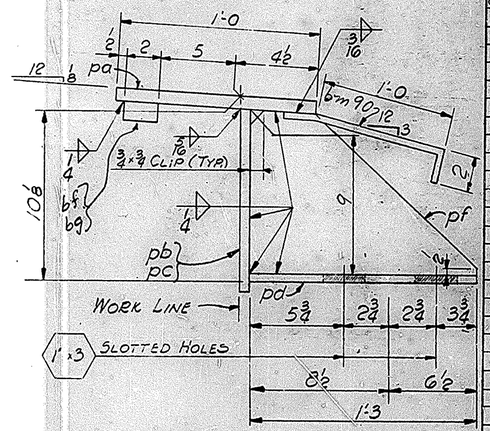

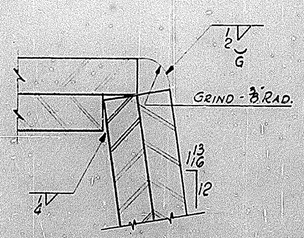

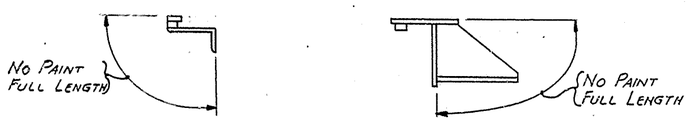

PAINT SKETCHES

NOTES:
ALL MATERIAL ASTM A36.
FOR GENERAL NOTES SEE DWG. GN1.
WORK THIS DWG. WITH DWG. 90.

NASHVILLE BRIDGE COMPANY

SHOP ORDER NO. B-5728
WORK ORDER NO.
CONTRACT NO. C6736

COMMONWEALTH OF KENTUCKY, DEPT. OF HIGHWAYS, BRIDGE
OVER NORTHWESTERN PKWY & 22ND ST. JEFFERSON COUNTY

FABRICATION BESSEMER PLANT

BILL NO. 90
DRAWING NO. 90 & 91

WEIGHTS BY
CHECKED BY

SHOP	SHIPPING MARK	ITEM QUANT.	ASSEMBLY MARK		SECTION	FINISHED LENGTH FT. IN.	ORDERED LENGTH FT. IN.	P.O. NO.	ITEM NO.	REMARKS	SPECIF. WEIGHT	AISC WEIGHT
					MAT. ASTM A36							
One	90EDRA1				EXPANSION DAM							
		One	aa	L	8x4x1/2	16 5/8		8 PL 5400	112	BENT		22/11
		2	ba	PL	2 1/2x3/4	11 9/2		59/13	608			23/61
		2	bb	PL	2 1/2x3/4	11 5/8			608			23/61
		One	bc	PL	2x1	11 3/4			608			23/30
		2	bd	PL	2x1	11 6			608			23/60
		One	pk	PL	6x1/2	1 2 1/16		STK 5600	404			23/1
		One	pm	PL	4 1/2x1/2	0 6 1/2			404			23/6
		One	pn	PL	4 1/2x1/2	0 10 1/2			404			23/3
		One	pp	PL	11 1/2x1/2	1 2 1/2			404			23/6
		One	ps	PL	6x1/2	1 7 1/2			404			23/1
		One	pt	PL	2 1/2x1/2	1 4 1/2			404			23/5
		One	pv	PL	7 1/2x1/2	0 10 1/2			404			23/4
		One	pw	PL	11 1/2x1/2	1 5 1/2			404			23/1
		24	bk90	3/8	1/2x3/3	1 0		STK 6600	606	BENT		23/3
		22	bp90	3/8	1/2x3/3	1 0			606	BENT		23/3
		3	bn90	3/8	1/2x3/3	1 4			606	BENT		23/2
		One	bh	3/8	2x1	11 2 1/2		59/13	608			23/30
One	90EDRA2				EXPANSION DAM							
		One	pa	PL	12x3/4	46 10 3/8	3/8 10 3/8	6 PL 5400	313	BENT		23/6
		One	pb	PL	10x1/2	22 7 1/4		59/10	401			23/1
		One	pc	PL	10x1/2	22 7 3/4			401			23/1
		12	pd	PL	8x3/8	1 3	32 CUTS 108	59/09	403			23/3
		12	pf	PL	9x3/8	1 3	35 CUTS 114		411			23/4
		2	bf	3/8	2x1	11 3 1/16		59/13	608			23/30
		2	bg	3/8	2x1	11 6			608			23/60
		One	px	PL	6 1/2x1/2	1 10 3/8		STK 3600	404			
		One	py	PL	10 1/2x1/2	1 10 3/8			404			
		One	paa	PL	6 1/2x1/2	2 6 5/8			404			
		One	pab	PL	10 1/2x1/2	2 1/16			404			
		4	bn90	3/8	1/2x3/3	1 4		STK 6600	606	Bent		23/2
		28	bm90	3/8	1/2x3/3	1 4			606	Bent		23/2
										SHEET TOTAL		

100

EXPANSION DAM BENT RA
BRIDGE OVER NORTHWESTERN PKWY & 22ND ST.
DEPT. OF HIGHWAYS, COMMONWEALTH OF KENTUCKY
JEFFERSON CTY. F.A.P. IC-2(73)2; SPSG 2(73) TLB1
CONTRACTOR: MATTINGLY BRIDGE CO.

NASHVILLE BRIDGE COMPANY
NASHVILLE, TENN.
BESSEMER PLANT

APPROVED FOR SHOP
Chief Draftsman
Chief Engineer
Revision Notes
Appr. 2/10/70

Drawn by J.L. Date 11-29-69
Checked by V.M. Date 12/3/69
Shop Paint See GN1
Field Paint
Date Painted

Bill Master No. 90
Shop Order No. B-5728
Contract No. C6736
Drawing No. 91

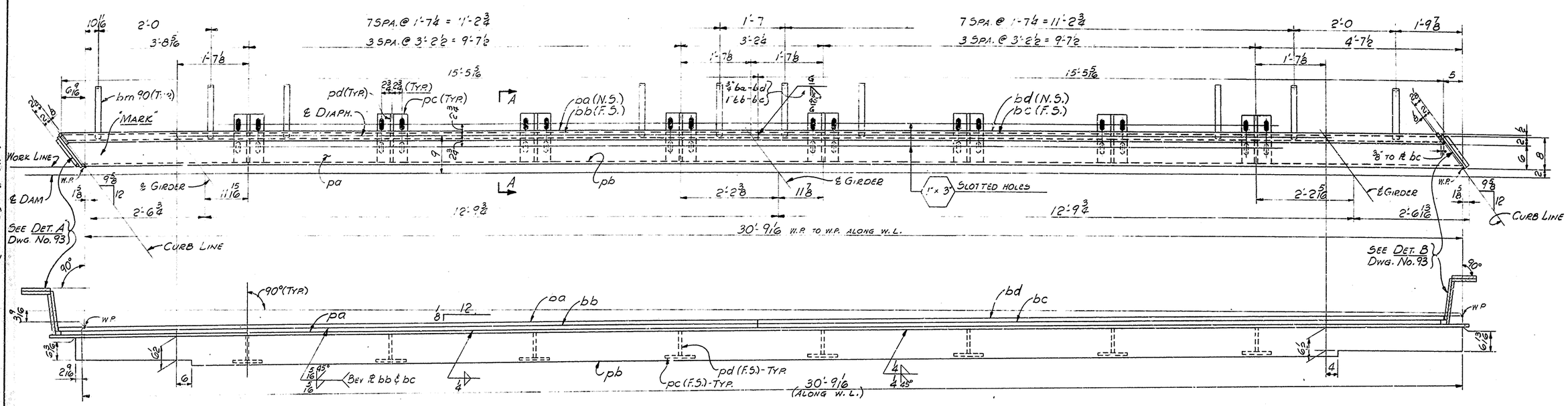

MAKE ONE EXPANSION DAM MARK 92EDR1

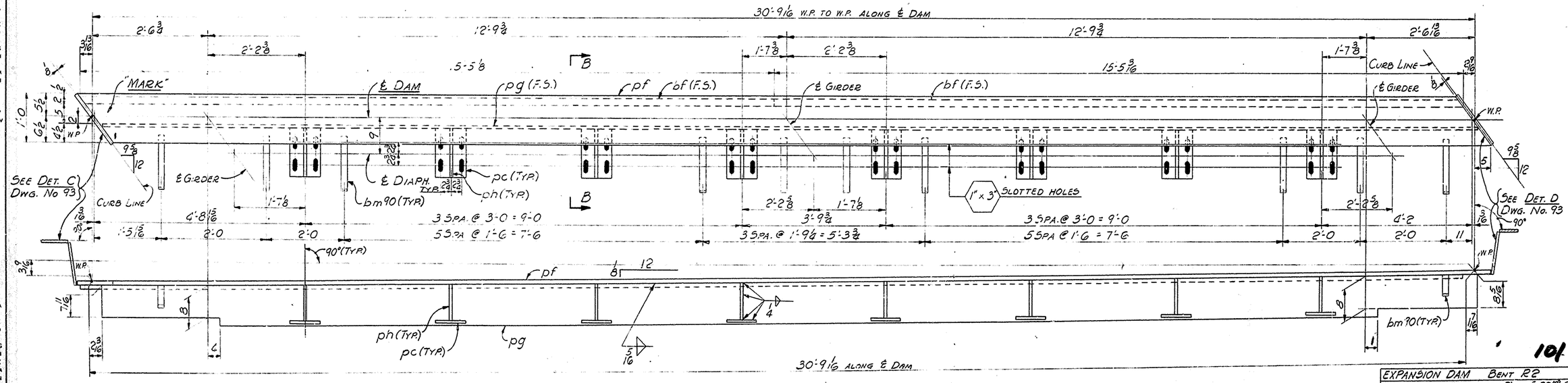

MAKE ONE EXPANSION DAM MARK 92EDR2

101

NOTES:
ALL MATERIAL ASTM A36.
FOR GENERAL NOTES SEE DWG. No. GN1.
EXPANSION DAMS ARE TO BE ASSEMBLED IN THE SHOP IN THEIR RELATIVE FINAL POSITION AND INSPECTED FOR FIT.
WORK THIS DWG. WITH DWG. No. 93.

EXPANSION DAM BENT R2
BRIDGE OVER NORTHWESTERN P'WAY & 22ND ST.
DEPT. OF HIGHWAYS, COMMONWEALTH OF KENTUCKY
JEFFERSON CTY., F.A.P. IG4-2.73)2; SP56-8273-7L31
CONTRACTOR: MATTINGLY BRIDGE CO.

NASHVILLE BRIDGE COMPANY
NASHVILLE, TENN.
BESSEMER PLANT

APPROVED FOR SHOP
NMF 2/6/70 CHIEF DRAFTSMAN
AK 2/6/70 CHIEF ENGINEER
REVISION NOTES: APPR. 3/5/70

HOLES: A3 NOTED
FIELD CONN.: 3/4
SHOP PAINT: SEE GN1
FIELD:

DRAWN BY: J.B. DATE: 12-2-69
IN CHARGE: GATTI (TENSOR)
CHECKED BY: VM DATE: 1/23/70
DATE PRINTED:

BILLS MATERIAL NO. 92
CONT. C6736
S.O. B-5728
DRAWING NO. 92

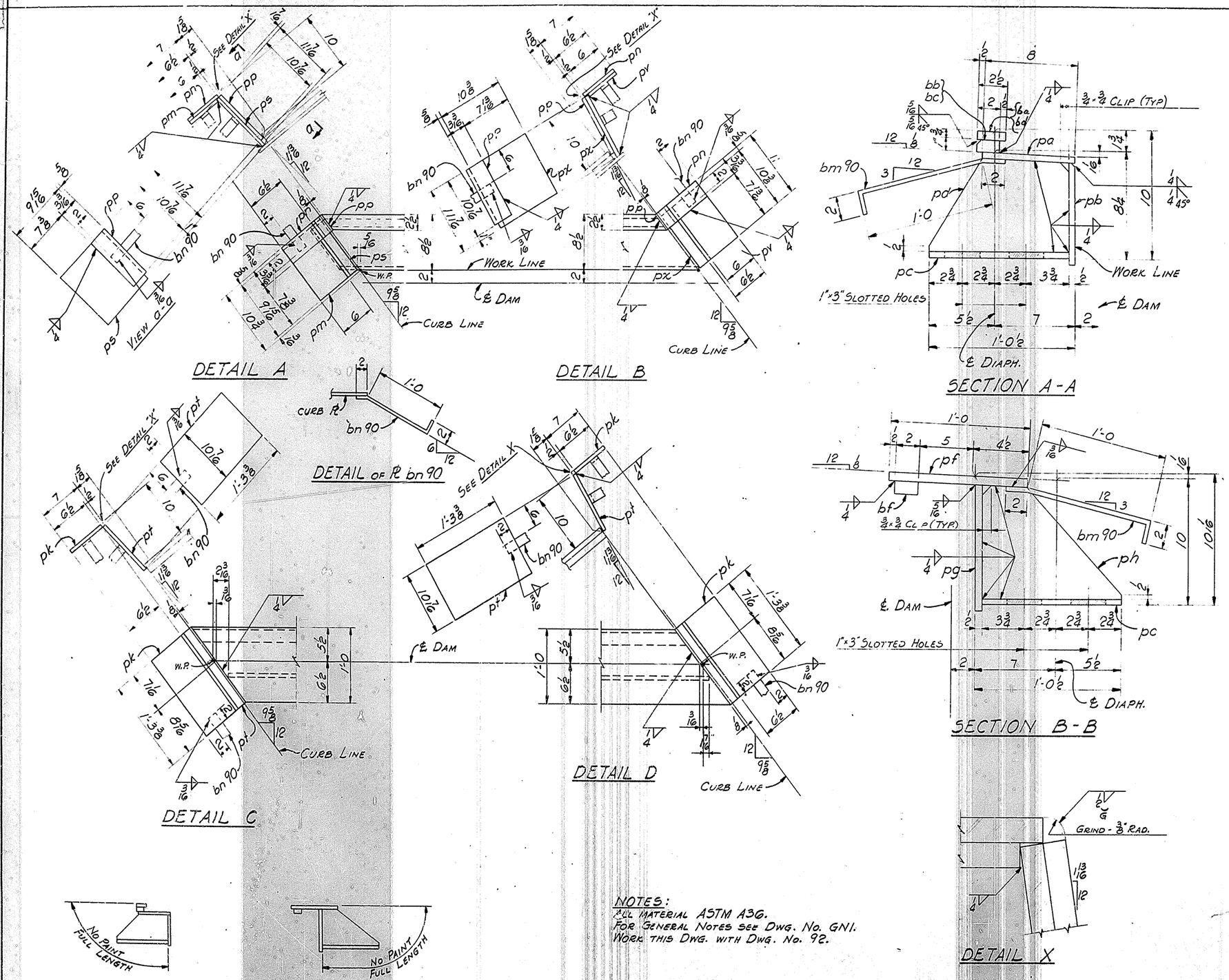

NOTES:
ALL MATERIAL ASTM A36.
FOR GENERAL NOTES SEE DWG. NO. GN1.
WORK THIS DWG. WITH DWG. NO. 92.

NASHVILLE BRIDGE COMPANY

SHOP ORDER NO. B-5728
WORK ORDER NO.
CONTRACT NO. C6736

COMMONWEALTH OF KENTUCKY, DEPT OF HIGHWAYS, BRIDGE OVER NORTHWESTERN P'KWY. & 22ND ST. JEFFERSON COUNTY

FABRICATION BESSEMER PLANT

BILL NO. 92
DRAWING NO. 92 & 93

ITEM
WEIGHTS BY
CHECKED BY

SHIP	SHIPPING MARK	ITEM QUANT.	ASSEMBLY MARK	SHAPE	SECTION	FINISHED LENGTH FT.	FINISHED LENGTH IN.	ORDERED LENGTH FT.	ORDERED LENGTH IN.	P.O. NO.	ITEM NO.	REMARKS	SPECIF. WEIGHT	A.I.S.C. WEIGHT
					MAT. ASTM A36									
ONE 92EDR1					EXPANSION DAM									
		ONE	pa	PL	8×1/2	31	6 1/2			3917	603			22/66
		ONE	pb	PL	8 1/2×1/2	30	11 3/8				603			23/85
		8	pc	PL	8×3/8	1	0	8 @ CUTS	1080		913			23/8
		8	pd	PL	7 3/8×3/8	1	0				411			23/4
		ONE	pm	PL	6×1/2	0	9 3/8			STK 5680	406			23/1
		2	pn	PL	3 9/16×1/2	0	6 1/2				406			23/2
		2	pp	PL	3 9/16×1/2	0	10 1/16				406			23/3
		ONE	ps	PL	9 15/16×1/2	0	11 3/8				406			23/4
		ONE	py	PL	6×1/2	0	10 3/8				406			23/5
		ONE	px	PL	10 3/8×1/2	0	11 7/16				406			23/6
		ONE	bd	8"PL	2 1/4×3/4	15	5 1/2			3913	606			22/68
		ONE	ba	8"PL	2 1/2×3/4	15	5 1/2			3913	606			22/88
		ONE	bb	8"PL	2×1	15	5 1/4				603			22/87
		ONE	bc	8"PL	2×1	15	4 1/2				603			22/87
		20	bm90	8"PL	1 1/2×3/8	1	4			STK 6080	606	BENT		23/2
		2	bn90	8"PL	1 1/2×3/8	1	4			STK 6080	606	BENT		23/6
ONE 92EDR2					EXPANSION DAM									
		ONE	pf	PL	12×3/4	31	6 1/2	8 @ CUTS	1080	3913	3121			20/83
		ONE	pg	PL	10×1/2	30	8 5/16			STK 3776	627			17/66
		8	ph	PL	8 3/8×3/8	1	0			STK 3680	411			23/4
		8	pc	PL	8×3/8	1	0	8 @ CUTS	1080	3913	913			23/8
		2	pk	PL	6 1/2×1/2	1	3 3/8			STK 3680	606			23/5
		2	pt	PL	10 1/2×1/2	1	3 3/8			STK 3680	606			17/6
		2	bf	8"PL	2×1	15	5 1/2			3913	603			22/87
		20	bm90	8"PL	1 1/2×3/8	1	4			STK 6080	606	BENT		23/2
		2	bn90	8"PL	1 1/2×3/8	1	4			STK 6080	606	BENT		23/6

SHEET TOTAL

102

EXPANSION DAM BENT. R2
BRIDGE OVER NORTHWESTERN P'KWY & 22ND ST.
DEPT. OF HIGHWAYS, COMMONWEALTH OF KENTUCKY
JEFFERSON CTY. F.A.P. IGG-2(73); SPSL-8173-76.81
CONTRACTOR: MATTINGLY BRIDGE CO.

NASHVILLE BRIDGE COMPANY
NASHVILLE, TENN.
BESSEMER PLANT

APPROVED FOR SHOP
CHIEF DRAFTSMAN
CHIEF ENGINEER
REVISION NOTES

HOLES 12 NOTED
FIELD CONN. } SEE GN1
SHOP PAINT
FIELD

DRAWN BY L.B. DATE 12-4-69
IN CHARGE L. GATTI (TENSOR)
CHECKED BY VM DATE 1/23/70
DATE PRINTED

BILL MATERIAL NO. 92
CONT. C 6736
S.O. B-5728
DRAWING NO. 93

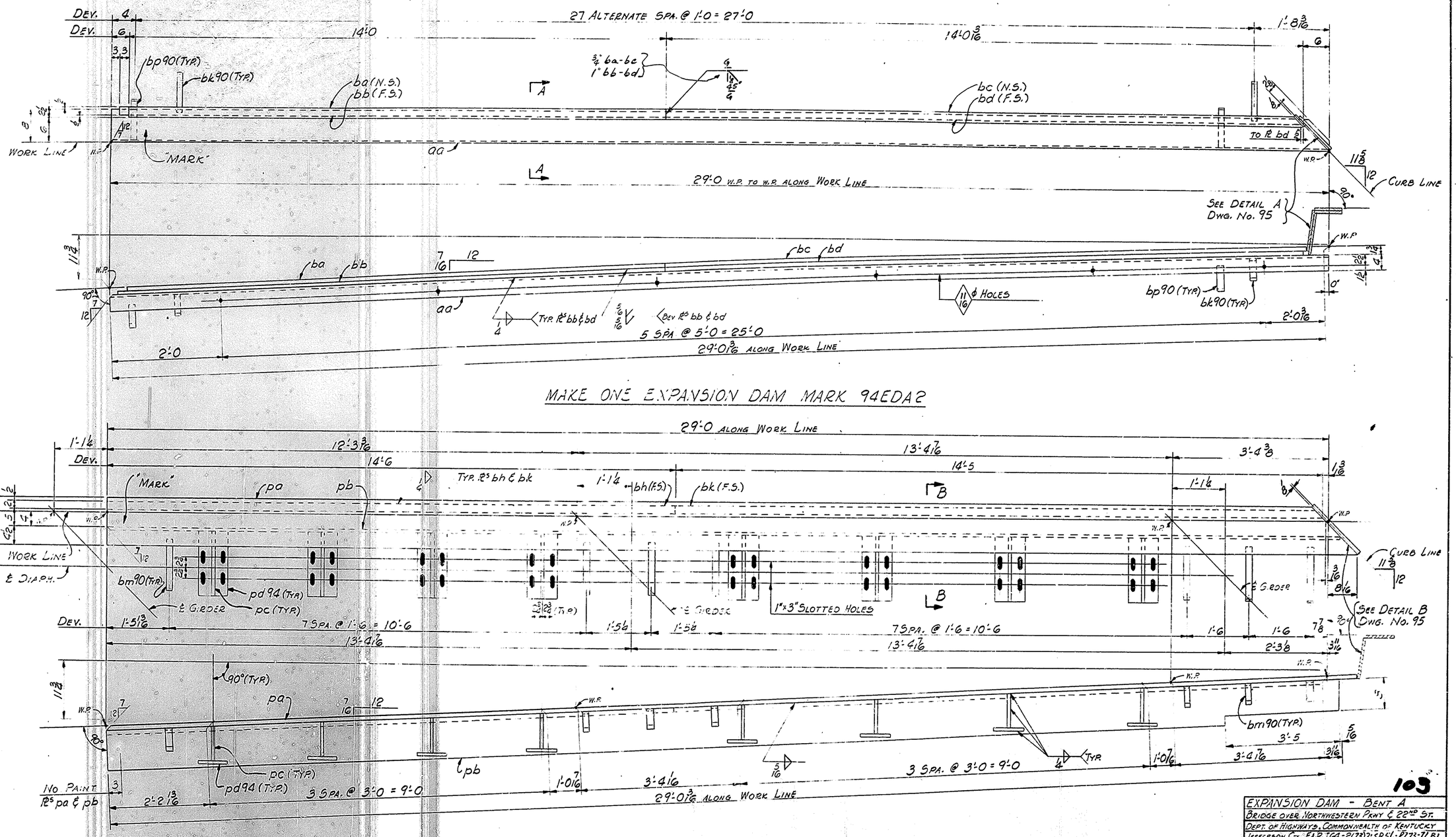

MAKE ONE EXPANSION DAM MARK 94EDA2

MAKE ONE EXPANSION DAM MARK 94EDA6

NOTES:
ALL MATERIAL ASTM A36.
FOR GENERAL NOTES SEE DWG. GN1.
EXPANSION DAMS ARE TO BE ASSEMBLED IN THE SHOP IN THEIR RELATIVE FINAL POSITION AND INSPECTED FOR FIT.
WORK THIS DWG. WITH DWG. 95.

103

EXPANSION DAM - BENT A
BRIDGE OVER NORTHWESTERN PKWY & 22ND ST.
DEPT. OF HIGHWAYS, COMMONWEALTH OF KENTUCKY
JEFFERSON CTY., F.A.P. IG4-2(73)2; SPSL-8273-72.81
CONTRACTOR: MATTINGLY BRIDGE CO.

NASHVILLE BRIDGE COMPANY
NASHVILLE, TENN.
BESSEMER PLANT

APPROVED FOR SHOP
CHIEF DRAFTSMAN
CHIEF ENGINEER
REVISION NOTES
APPR. 3/5/70

HOLES AS NOTED
FIELD CONN. ϕ
SHOP PAINT SEE GN1
FIELD

DRAWN BY J.B. DATE 12-8-69
IN CHARGE: GAFT. (TENDOE)
CHECKED BY M DATE 1/23/70
DATE PRINTED

BILL OF MATERIAL NO. 94
CONT. C6736
S.O. B-5728
DRAWING NO. 94

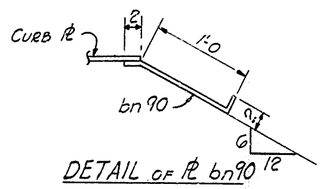

DETAIL OF PL bn90

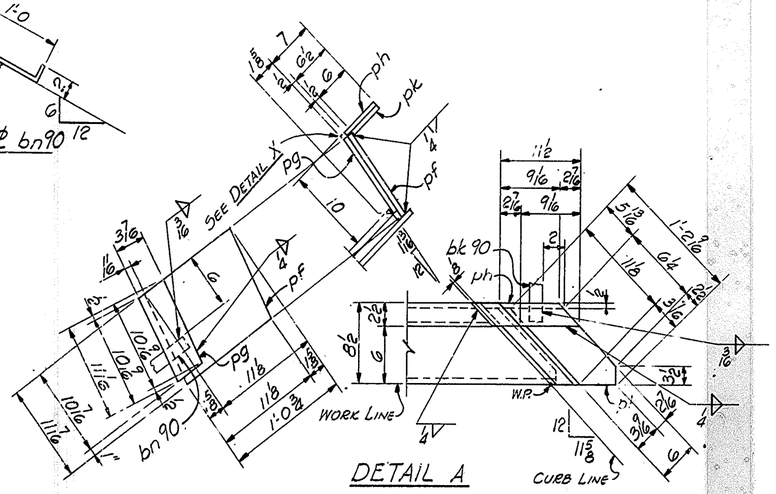

DETAIL A

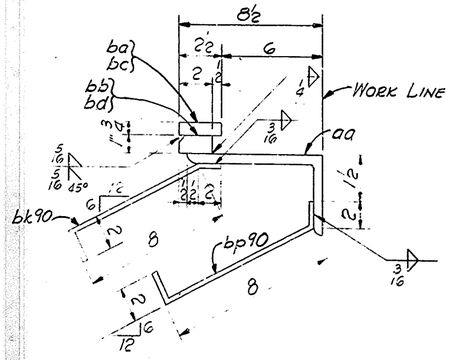

SECTION A-A

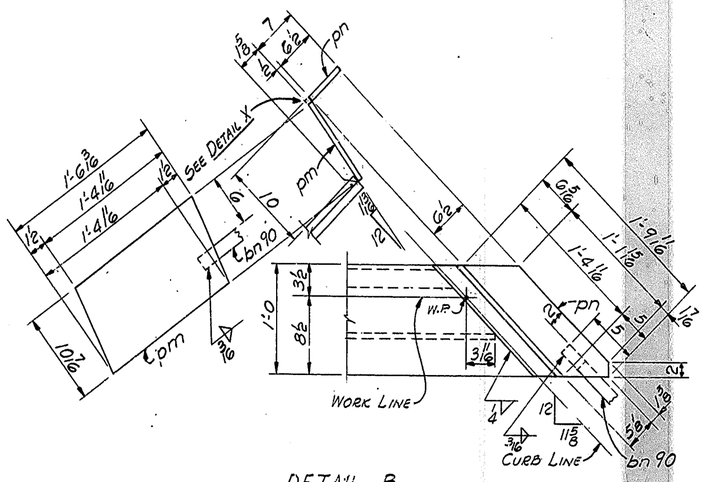

DETAIL B

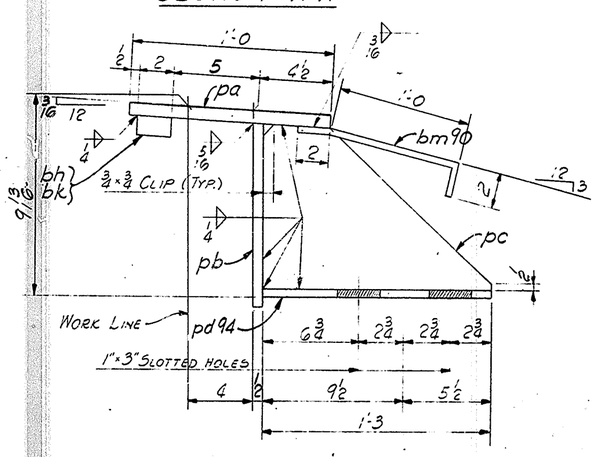

SECTION B-B

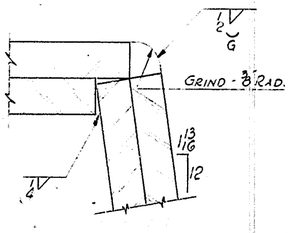

DETAIL X

PAINT SKETCHES

NOTES:
ALL MATERIAL ASTM A36.
FOR GENERAL NOTES SEE DWG. GN1.
WORK THIS DWG. WITH DWG. 94

NASHVILLE BRIDGE COMPANY

SHOP ORDER NO. B-5728
WORK ORDER NO.
CONTRACT NO. C6736

COMMONWEALTH OF KENTUCKY, DEPT OF HIGHWAYS, BRIDGE
OVER NORTHWESTERN PKWY & 22ND ST. JEFFERSON COUNTY

FABRICATION BESSEMER PLANT

BILL NO. 94
DRAWING NO. 94 & 95

ITEM
WEIGHTS BY
CHECKED BY

SHIP	EXCEPTIONS MARK	ITEM COUNT	ASSEMBLY MARK		SECTION	FINISHED LENGTH FT. IN.	ORDERED LENGTH FT. IN.	P.O. NO	ITEM NO	REMARKS	WEIGHT	ASSC WEIGHT
					MAT. ASTM A36							
ONE	94EDA2				EXPANSION DAM							
		ONE	aa	L	8x4x½	29 0½		STK 3682	118			19/5
		ONE	pf	PL	11⅞x½	1 0¾		STK 3680	406			22/4
		ONE	pg	PL	3⅛x½	0 11⅞			406			22/3
		ONE	ph	PL	2½x½	0 11⅞			406			22/5
		ONE	pk	PL	6x½	1 2⅝			406			22/1
		ONE	ba	5/16 PL	2½x⅜	14 0		3913	603			19/1
		ONE	bb	5/16 PL	2x1	14 3		3913	603			19/6
		ONE	bc	5/16 PL	2½x⅜	14 0¼		3913	603			19/1
		ONE	bd	5/16 PL	2x1	13 11⅞		3913	603			19/6
		14	bp90	5/16 PL	1½x⅜	1 0		STK 3684	606	BENT		19/54
		15	bk90	5/16 PL	1½x⅜	1 0			606	BENT		19/54
		ONE	bn90	5/16 PL	1½x⅜	1 4			606	BENT		19/53
ONE	94EDA3				EXPANSION DAM							
		ONE	pa	PL	12x¾	29 8¼	8⅝ CUTS 7 @ 12	3910	316			18/2
		ONE	pb	PL	10x½	29 3⅞		STK 3712	407			19/5
		18	pc	PL	8⅝x⅜	1 3		3909	411			18/31
		8	pd94	PL	8x⅜	1 3	8⅝ CUTS 10 @ 8	3909	413			18/30
		ONE	pm	PL	10⅞x½	1 6⅝		STK 3680	406			22/2
		ONE	pn	PL	6½x½	1 9⅛		STK 3680	406			
		ONE	bh	5/16 PL	2x1	14 6		3913	603			19/6
		ONE	bk	5/16 PL	2x1	14 5		3913	603			19/6
		19	bm90	5/16 PL	1½x⅜	1 4		STK 3686	606	BENT		19/53
		2	bn90	5/16 PL	1½x⅜	1 4		STK 3686	606	BENT		19/53

SHEET TOTAL

104

EXPANSION DAM BENT A
BRIDGE OVER NORTHWESTERN PWKY & 22ND ST.
DEPT. OF HIGHWAYS, COMMONWEALTH OF KENTUCKY
JEFFERSON CTY. F.A.P. IG4-2(73)2; SP56-3273-7L B1
CONTRACTOR: MATTINGLY BRIDGE CO.

NASHVILLE BRIDGE COMPANY
NASHVILLE, TENN.
BESSEMER PLANT

APPROVED FOR SHOP
NWE 5/6/70 CHIEF DRAFTSMAN
MHS 5/11/70 CHIEF ENGINEER
REVISION NOTES

SCALE: — OR NOTED
HOR. SC. AS OR NOTED
FIELD FORM / SHOP PAINT / FIELD: SEE GN1
DRAWN BY J.B. DATE 10-9-69
IN CHARGE: GATTI-TENSOR
CHECKED BY LTM DATE 1/23/70
DATE PRINTED

BILL MATERIAL NO. 94
CONT. C6736
S.O. B-5728
DRAWING NO. 95

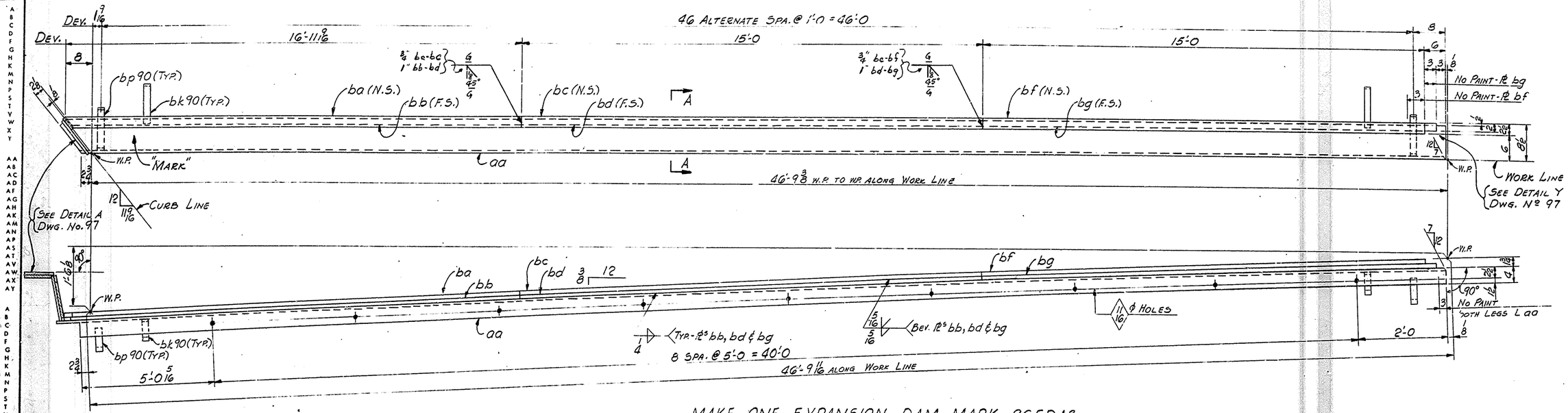

MAKE ONE EXPANSION DAM MARK 96EDA3

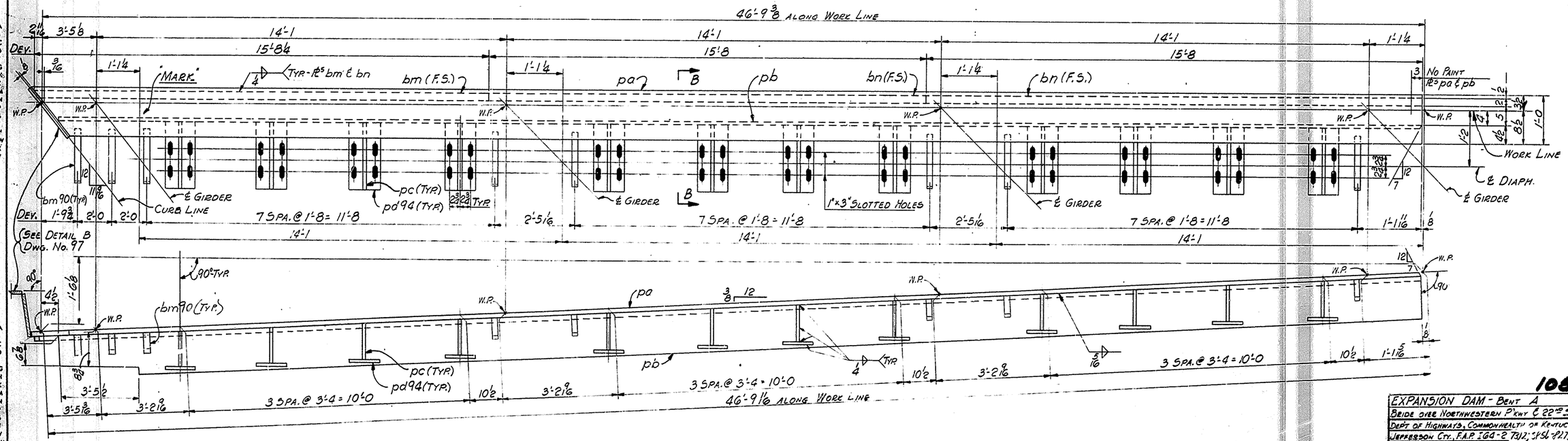

MAKE ONE EXPANSION DAM MARK 96EDA7

NOTES:
ALL MATERIAL ASTM A36.
FOR GENERAL NOTES SEE DWG. GN1.
EXPANSION DAMS ARE TO BE ASSEMBLED IN THE SHOP IN THEIR RELATIVE FINAL POSITION AND INSPECTED FOR FIT.
WORK THIS DWG. WITH DWG. 97.

105.

EXPANSION DAM - BENT A
BRIDGE OVER NORTHWESTERN P'KWY & 22ND ST.
DEPT OF HIGHWAYS, COMMONWEALTH OF KENTUCKY
JEFFERSON CTY., F.A.P. IGA-2 T312; SFSL-4273-71 B1
CONTRACTOR: MATTINGLY BRIDGE CO

NASHVILLE BRIDGE COMPANY
NASHVILLE, TENN.
BESSEMER PLANT

APPROVED FOR SHOP
NMF 2/6/70 CHIEF DRAFTSMAN
JRC 2/10/70 CHIEF ENGINEER
REVISION NOTE: APPR. 2/5/70

HOLES: As NOTED
FIELD CONN: 3/4
SHOP PAINT: SEE GN1
FIELD:

DRAWN BY: J.B. DATE: 12-10-69
IN CHARGE: GATTI (TENTOR)
CHECKED BY: V.M. DATE: 1/23/70
DATE PRINTED

BILLS MATERIAL NO.	CONT. C6736	DRAWING NO.
96	S.O. B-5728	96

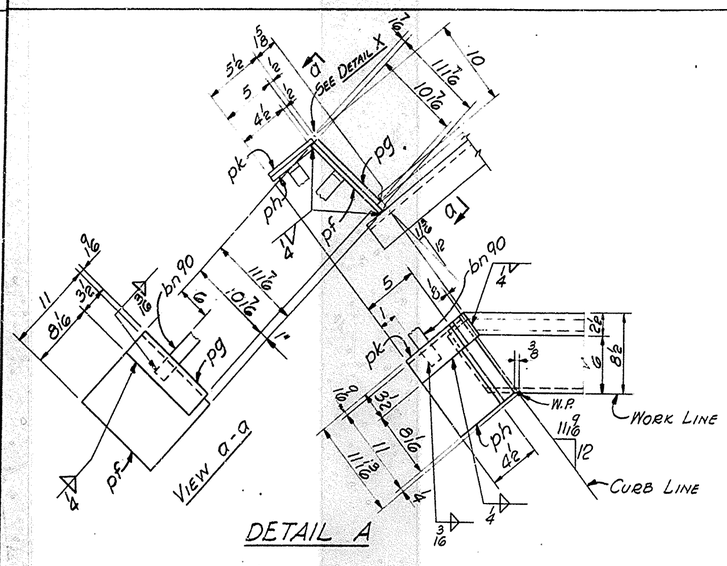

DETAIL A

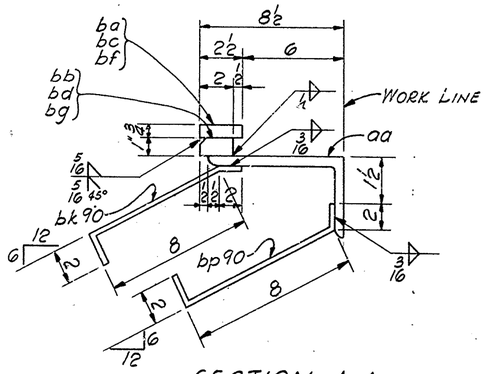

SECTION A-A

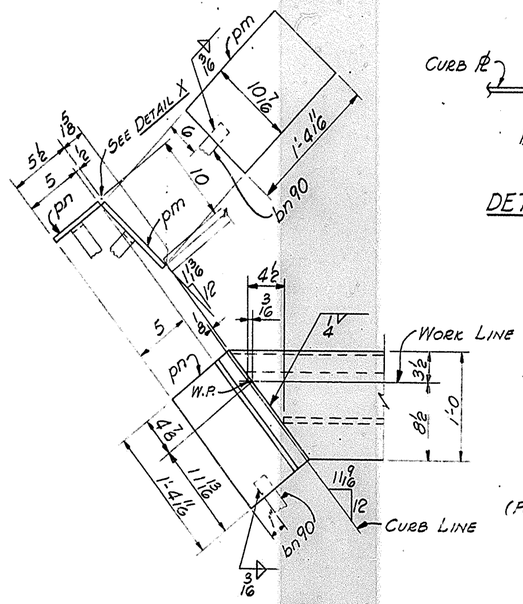

DETAIL B

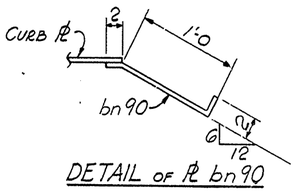

DETAIL OF PL bn 90

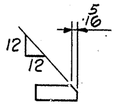

SECT. w
(FOR PL bw ONLY)

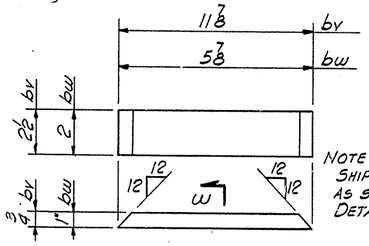

NOTE:
SHIP PLS by & bw AS SHOWN ON DETAIL Y.

DETAIL OF PLS by & bw

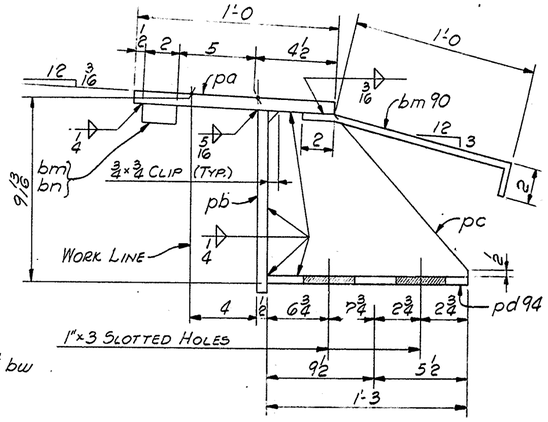

SECTION B-B

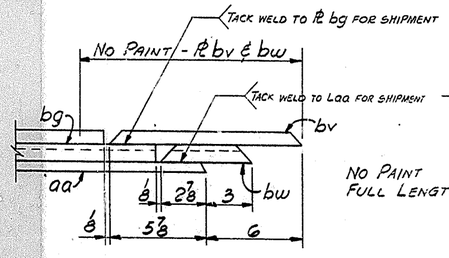

DETAIL Y

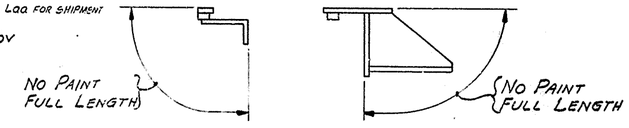

PAINT SKETCHES

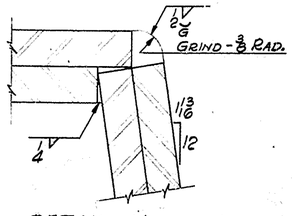

DETAIL X

NOTES:
ALL MATERIAL ASTM A36.
FOR GENERAL NOTES SEE DWG. GN1.
WORK THIS DWG. WITH DWG. Nº 96.

NASHVILLE BRIDGE COMPANY

SHOP ORDER NO. B-5728
WORK ORDER NO.
CONTRACT NO. C 6736

COMMONWEALTH OF KENTUCKY, DEPT. OF HIGHWAYS, BRIDGE OVER NORTHWESTERN PKWY & 22ND ST. JEFFERSON COUNTY

BILL NO. 96
DRAWING NO. 96 & 97

FABRICATION BESSEMER PLANT

ITEM | WEIGHTS BY | CHECKED BY

SHOP	SHIPPING MARK	ITEM QUANT	ASSEMBLY MARK	SHAPE	SECTION	FINISHED LENGTH FT	FINISHED LENGTH IN	ORDERED LENGTH FT	ORDERED LENGTH IN	P.O. NO	ITEM NO.	REMARKS	SPECIF WEIGHT	ASSC WEIGHT
					MAT. ASTM A36									
ONE 96EDA3					EXPANSION DAM									
		ONE	aa	L	8 x 4 x 1/2	47	6 3/8			STK 3682	110			18/7
		ONE	pf	PL	11 x 1/2	0	11 1/16			STK 3680	406			23/8
		ONE	pg	PL	3 1/2 x 1/2	0	10 1/2				406			22/8
		ONE	ph	PL	4 1/2 x 1/2	0	11				406			23/8
		ONE	pk	PL	3 1/2 x 1/2	0	5				406			23/8
		ONE	ba	8 3/16	2 1/2 x 3/4	16	11 3/8			3913	603			19/21
		ONE	bb	8 3/16	2 x 1	16	11 3/8				603			19/20
		ONE	bc	8 3/16	2 1/2 x 3/4	14	11 3/8				603			19/21
		ONE	bd	8 3/16	2 x 1	14	11 3/8				603			18/20
		ONE	bf	8 3/16	2 1/2 x 3/4	15	0				603			18/21
		ONE	bg	8 3/16	2 x 1	15	3				603			18/20
		24	bp 90	8 3/16	1 1/2 x 3/8	1	0			STK 686	606	BENT		22/64
		23	bk 90	8 3/16	1 1/2 x 3/8	1	0				606	BENT		22/64
		2	bn 90	8 3/16	1 1/2 x 3/8	1	4				606	BENT		22/63
		ONE	bv	8 3/16	2 1/2 x 3/4	0	11 3/8			3913	603			19/21
		ONE	bw	8 3/16	2 x 1	0	5 3/8			3913	603			19/20
ONE 96EDA7					EXPANSION DAM									
		ONE	pa	PL	12 x 3/4	47	0 3/4	73 3/4	COMBER	3910	313			19/16
		ONE	pb	PL	10 x 1/2	46	5/16			3910	401			18/9
		12	pc	PL	8 3/8 x 3/8	1	3			3909	411			18/9
		12	pd 94	PL	8 x 3/8	1	3	8 & CUTS	10 & 8	3909	413			18/20
		ONE	pm	PL	10 7/16 x 1/2	1	4 1/16			STK 3680	406			22/8
		ONE	pn	PL	5 x 1/2	1	4 1/16			STK 3680	406			22/8
		ONE	bm	8 3/16	2 x 1	15	8 1/4			3913	603			19/20
		2	bn	8 3/16	2 x 1	15	8			3913	603			19/20
		26	bm 90	8 3/16	1 1/2 x 3/8	1	4			STK 686	606	BENT		22/63
		2	bn 90	8 3/16	1 1/2 x 3/8	1	4			STK 686	606	BENT		22/63
												SHEET TOTAL		

APPROVED FOR SHOP
WMF 3/6/70 CHIEF DRAFTSMAN
JAC 3/6/70 CHIEF ENGINEER
REVISION NOTES

HOLES A2 AS NOTED
FIELD CONN. } SEE GN1
SHOP PAINT }
FIELD

186

EXPANSION DAM BENT. A
BRIDGE OVER NORTHWESTERN P'KWY & 22ND ST.
DEPT. OF HIGHWAYS, COMMONWEALTH OF KENTUCKY
JEFFERSON CTY. F.A.P. IG4-2(73)2; SPSL-8273-7LB1
CONTRACTOR: MATTINGLY BRIDGE CO.

NASHVILLE BRIDGE COMPANY
NASHVILLE, TENN.
BESSEMER PLANT

DRAWN BY J.B. DATE 12-10-69
CHECKED BY VM DATE 1/23/70
DATE PRINTED

BILLS MATERIAL NO.	CONT. C 6736	DRAWING NO.
96	S.O. B-5728	97

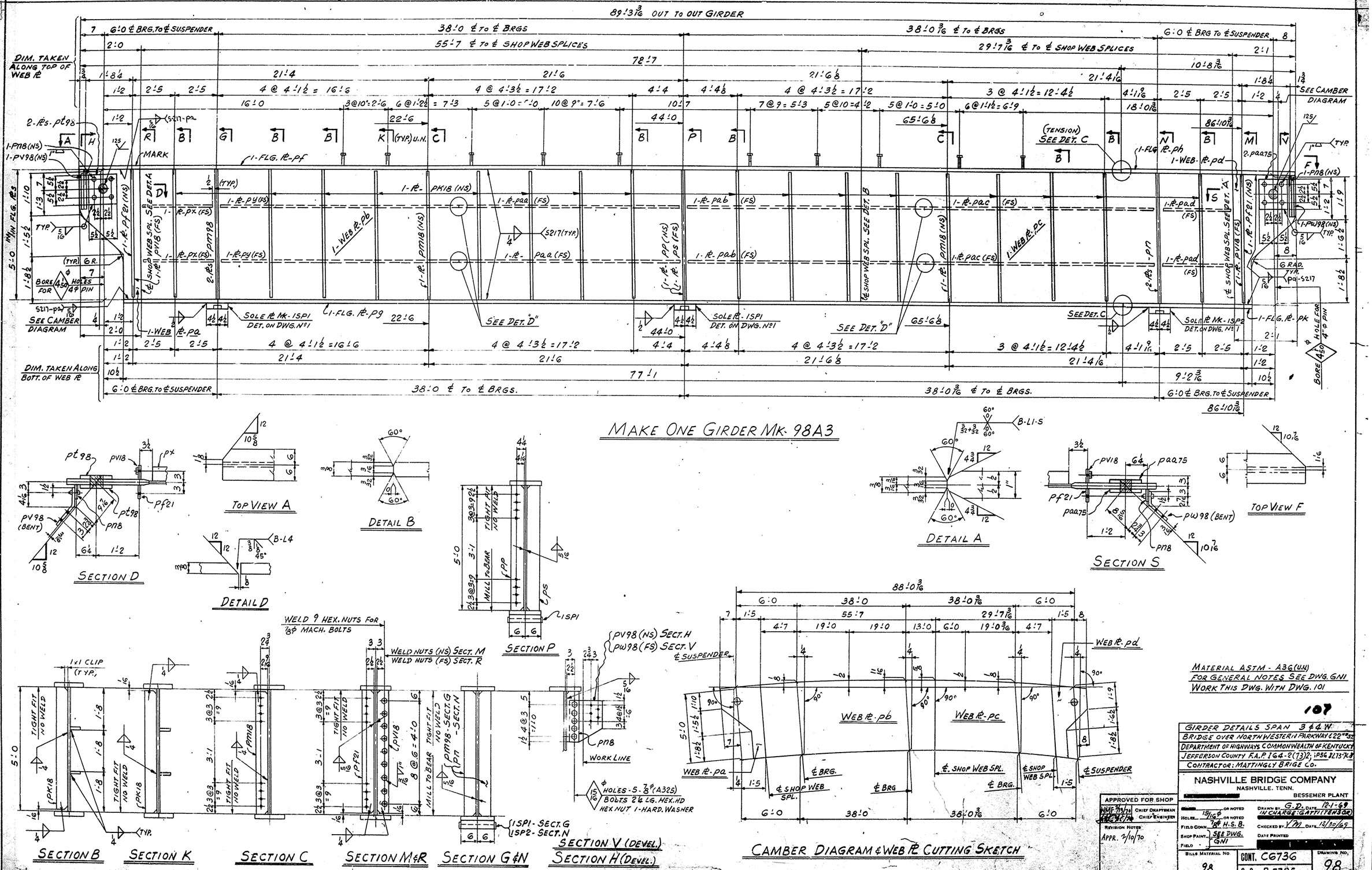

MAKE ONE GIRDER MK-98A3

MATERIAL ASTM - A36 (UN)
FOR GENERAL NOTES SEE DWG. GN1
WORK THIS DWG. WITH DWG. 101

107

GIRDER DETAILS SPAN 3 & 4 W
BRIDGE OVER NORTH WESTERN PARKWAY & 22ND ST.
DEPARTMENT OF HIGHWAYS COMMONWEALTH OF KENTUCKY
JEFFERSON COUNTY F.A.P. IG4-2(73)2; IPS6 & 213-78
CONTRACTOR: MATTINGLY BRIGE CO.

NASHVILLE BRIDGE COMPANY
NASHVILLE. TENN.
BESSEMER PLANT

APPROVED FOR SHOP	
Chief Draftsman	
Chief Engineer	
Revision Notes	APPR. 7/10/70
Drawn by	G.D. Date 12-1-69
In Charge	GATTITEN & OR
Checked by	Date 12/30/69
Date Printed	
Holes	15/16ϕ or noted
Field Conn.	7/8ϕ H.S.B.
Shop Paint	See DWG. GN1
Field	
Bills Material No.	98
CONT.	C6736
S.O.	B5725
Drawing No.	98

B. F. ELLIOTT CO., PGH., PA. REORDER A-8373

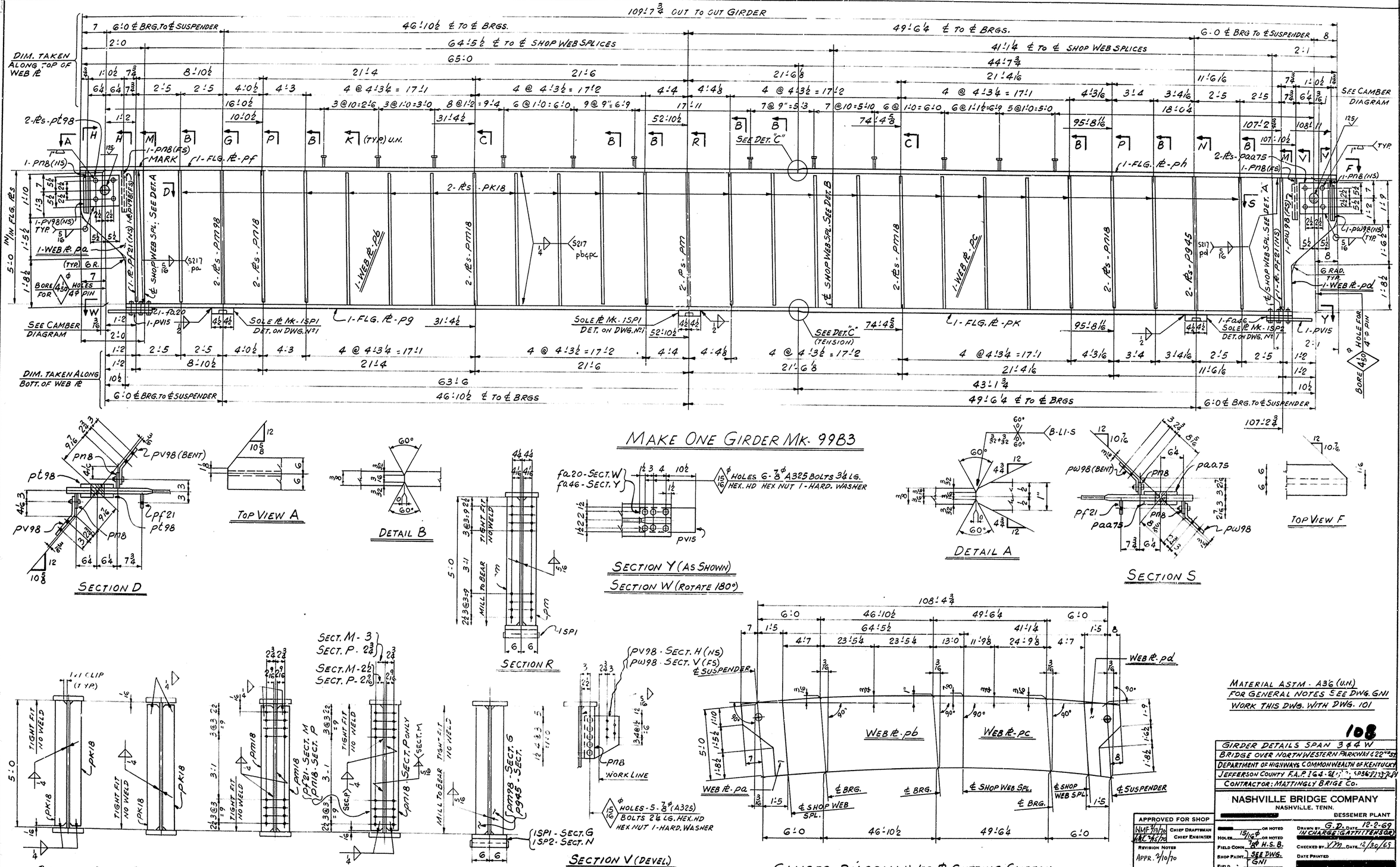

MAKE ONE GIRDER MK. 99B3

MATERIAL ASTM - A36 (U.N.)
FOR GENERAL NOTES SEE DWG. GN1
WORK THIS DWG. WITH DWG. 101

108

GIRDER DETAILS SPAN 3 & 4 W
BRIDGE OVER NORTH WESTERN PARKWAY & 22ND ST.
DEPARTMENT OF HIGHWAYS COMMONWEALTH OF KENTUCKY
JEFFERSON COUNTY F.A.P. 164-(4) SPSS-9213-74
CONTRACTOR: MATTINGLY BRIDGE CO.

NASHVILLE BRIDGE COMPANY
NASHVILLE, TENN.
[redacted] BESSEMER PLANT

HOLES	15/16 ⌀ OR NOTED
FIELD CONN.	7/8 ⌀ H.S.B.
SHOP PAINT	SEE DWG. GN1
FIELD	
DRAWN BY	G.D. DATE 12-2-69
IN CHARGE	G. ZATTITENSOR
CHECKED BY	V.M. DATE 12/30/69
DATE PRINTED	[redacted]

APPROVED FOR SHOP
NMF 2/10/70 CHIEF DRAFTSMAN
NMF 2/13/70 CHIEF ENGINEER
REVISION NOTES
APPR. 2/10/70

BILLS MATERIAL NO.	CONT. C6736	DRAWING NO.
99	S.O. B5725	99

B. K. ELLIOTT CO., PGH., PA. REORDER B-8573

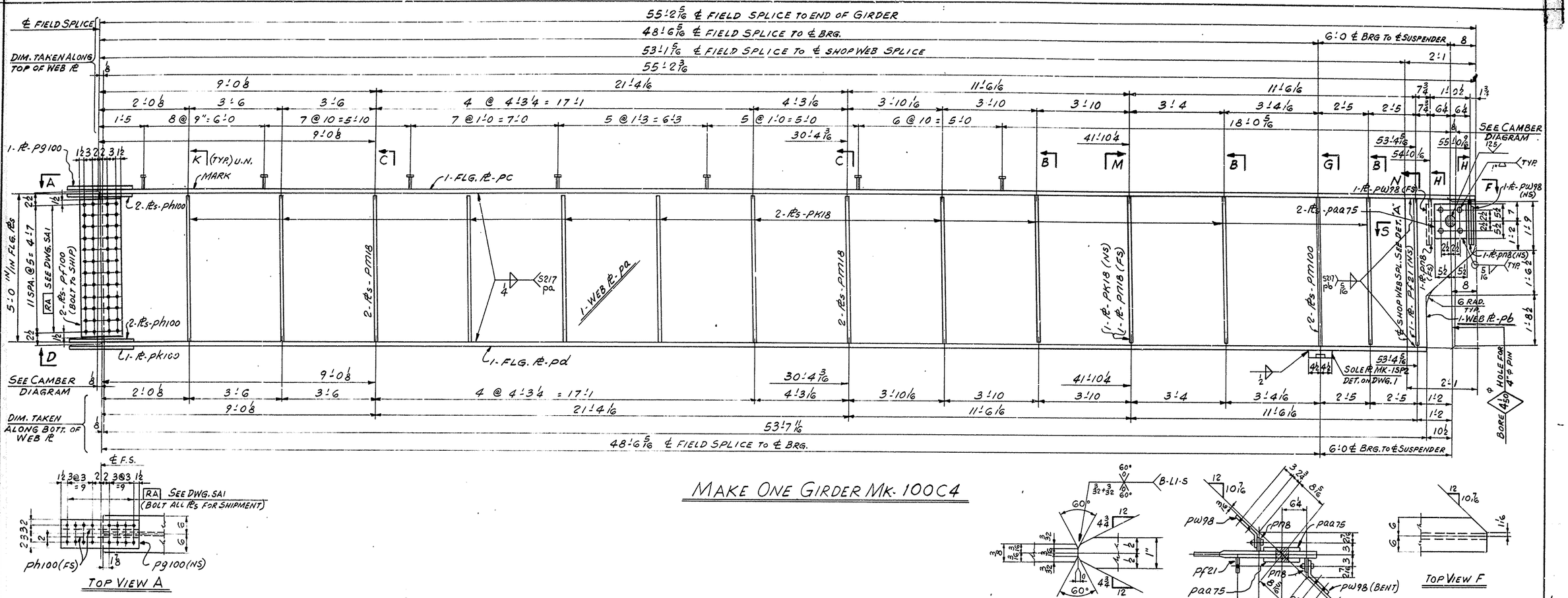

MAKE ONE GIRDER MK-100C4

TOP VIEW A

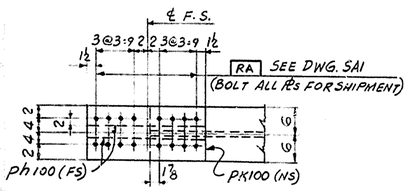

BOTT. VIEW D

DETAIL A

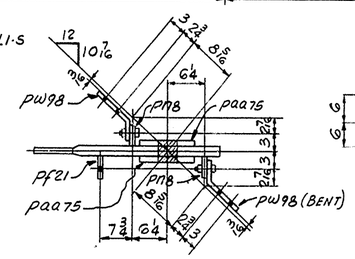

SECTION S

TOP VIEW F

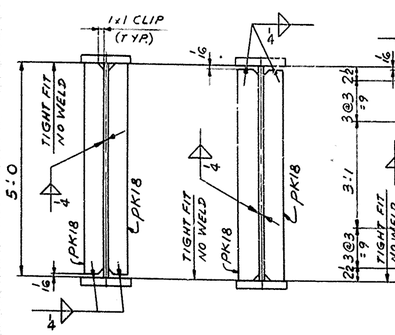

SECTION B

SECTION K

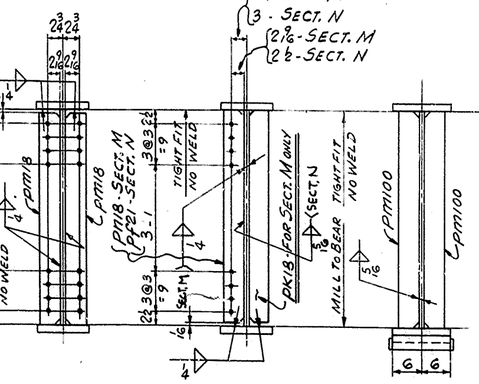

SECTION C

SECTION M&N

SECTION G

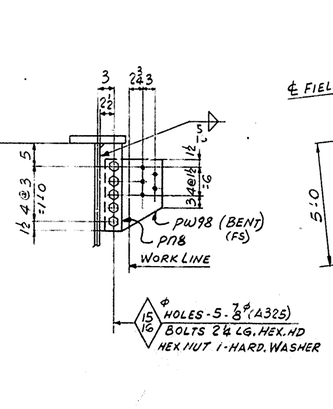

SECTION H (DEVEL.)

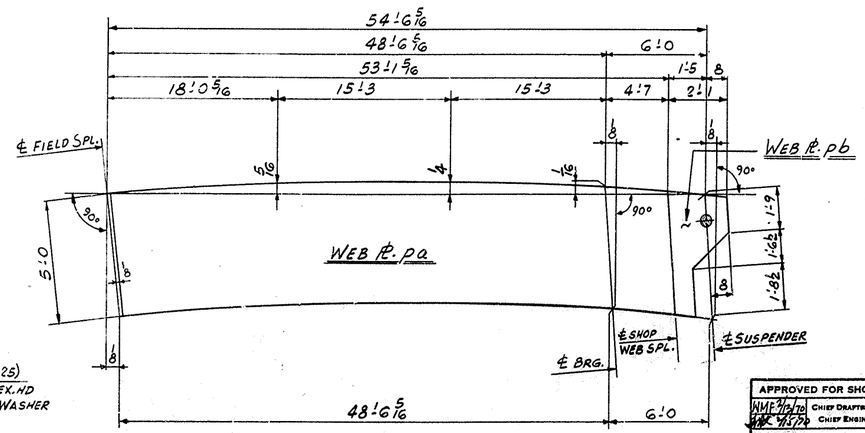

CAMBER DIAGRAM & WEB PL CUTTING SKETCH

MATERIAL ASTM - A36 (U.N.)
FOR GENERAL NOTES SEE DWG. GN1
WORK THIS DWG. WITH DWG. 101

100

GIRDER DETAILS SPAN 4W
BRIDGE OVER NORTH WESTERN PARKWAY & 22ND ST.
DEPARTMENT OF HIGHWAYS COMMONWEALTH OF KENTUCKY
JEFFERSON COUNTY F.A.P. T64-2(73)2; SP56B235-701
CONTRACTOR: MATTINGLY BRIDGE CO.

NASHVILLE BRIDGE COMPANY
NASHVILLE, TENN.
BESSEMER PLANT

APPROVED FOR SHOP
WHE 3/12/70 CHIEF DRAFTSMAN
JAK 3/12/70 CHIEF ENGINEER
REVISION NOTES
APPR. 3/10/70

HOLES	15/16 ϕ OR NOTED
FIELD CONN.	7/8 ϕ H.S.B.
SHOP PAINT	SEE DWG. GN1
FIELD	
DRAWN BY	G.D. DATE 12-4-69
IN CHARGE: G. ATTITTENSOR	
CHECKED BY	V. DATE 12/30/69
DATE PRINTED	
BILL MATERIAL NO.	100
CONT.	CG736
S.O.	B5725
DRAWING NO.	100

NASHVILLE BRIDGE COMPANY

SHOP ORDER NO. B5725 | WORK ORDER NO. | CONTRACT NO. C6736

COMMONWEALTH OF KENTUCKY DEPT. OF HIGHWAYS

BRIDGE OVER NORTHWESTERN PARKWAY & 22ND ST. JEFFERSON COUNTY

BILL NO. 98 | DRAWING NO. 98 & 101

FABRICATION BESSEMER PLANT

ITEM | WEIGHTS BY | CHECKED BY

SHIP	SHIPPING MARK	ITEM COUNT	ASSEMBLY MARK	SHAPE	SECTION	FINISHED LENGTH FT. IN.	ORDERED LENGTH FT. IN.	P.O. NO.	ITEM NO.	REMARKS	SPECIF. WEIGHT	A.I.S.C. WEIGHT
					MATERIAL ASTM-A36 (U.N.)							
ONE	98A3				GIRDER							
		1	pa	PL	244×1	5 0		3910	306	PL 61×3/16 MITCH CUT 1-EA-pa & pa87		6/2
		1	pb	PL	60 1/16×3/8	557	61×55 1/10	3908	435			7/13
		1	pc	PL	60 3/8×3/8	29 7/16	61×29 1/10	3905	516			7/4
		1	pd	PL	254×1	5 0		3910	306	PL 61×3/16 MITCH CUT 1-EA-pd & pa62		7/2
		1	pf	PL	12×1/16	78 7	73 1/2 CUTS 6@12	3910	328			8/7
		1	pg	PL	12×1/16	77 1	73 1/2 CUTS 6@12	3910	328			8/9
		1	ph	PL	12×3/8	10 8 3/16		3910	328			8/8
		1	pk	PL	12×5/8	9 2 7/16		3910	328			8/10
		2	pf21	PL	4×3/8	4 11 15/16		3905	605	(FIE)		11/16
		2	pv18	PL	4×3/8	4 11 15/16		3905	605	(FIE)		11/16
		16	pk18	PL	4×3/8	4 11 15/16		3905	605	(FIE)		11/16
		2	pm98	PL	5 1/2×1/16	5 0		3910	307	(MIE)(FIE)		10/24
		2	pm18	PL	4×3/8	4 11 15/16		3905	605	(FIE)		11/16
		1	pp	PL	5 1/2×1/2	5 0		STK 3680	406	(MIE)(FIE)		10/27
		1	ps	PL	5 1/2×1/2	5 0		STK 3680	406	(MIE)(FIE)		10/27
		2	pn	PL	5 1/2×1/4	5 0		3910	230	(MIE)(FIE)		11/9
		1	pv98	PL	12 5/8×3/8	1 3		STK 3372	438	(BENT)		11/27
		2	pn8	PL	4×3/8	1 6 1/2		3905	605			11/26
		1	pw98	PL	11×3/8	1 3		STK 3372	438	(BENT)		11/27
		2	pt98	PL	11×5/8	0 11		STK 3774	322			11/24
		2	pa075	PL	11×1/2	0 11		STK 3680	405			11/25
		2	px	PL	4×3/8	4 5 1/2		3905	605			11/15
		2	py	PL	(4×3/8	18 10 3/4						
		2	pa0	PL	4×3/8	18 11 1/4						
		2	pa6	PL	4×3/8	18 11 1/4						
		2	pa5	PL	4×3/8	18 10 15/16						
		2	pa4	PL	4×3/8	4 5 3/8		3905	605			11/15
		2	ISP1		SOLE PL					DET. ON SHT. #1		
		1	ISP2		SOLE PL					DET. ON SHT. #1		
		18			7/8 φ HEX NUTS					STK (A307)		
		10			7/8 φ BOLTS	0 24		26661	202	(A325) HEX. HD HEX. NUT		
		10			HARD. WASHERS FOR 7/8 φ BOLTS				203	(A325)		
		196			3/4 φ STUDS	0 4		27150	301	AUTO. END WELDED		
										SHEET TOTAL		

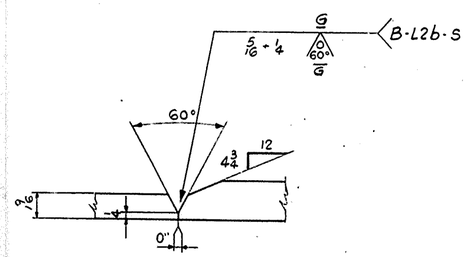

DETAIL "C"
(FOR GIRD. 98A3 & 99B3 ONLY)

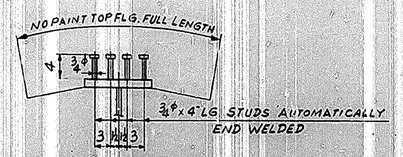

TYP. SECTION THRU TOP FLG.

NASHVILLE BRIDGE COMPANY

SHOP ORDER NO. B5725 | WORK ORDER NO. | CONTRACT NO. C6736

COMMONWEALTH OF KENTUCKY DEPT. OF HIGHWAYS

BRIDGE OVER NORTHWESTERN PARKWAY & 22ND ST. JEFFERSON COUNTY

BILL NO. 99 | DRAWING NO. 99 & 101

FABRICATION BESSEMER PLANT

ITEM | WEIGHTS BY | CHECKED BY

SHIP	SHIPPING MARK	ITEM COUNT	ASSEMBLY MARK	SHAPE	SECTION	FINISHED LENGTH FT. IN.	ORDERED LENGTH FT. IN.	P.O. NO.	ITEM NO.	REMARKS	SPECIF. WEIGHT	A.I.S.C. WEIGHT
					MATERIAL ASTM-A36 (U.N.)							
ONE	99B3				GIRDER							
		1	pa	PL	24 3/16×1	5 0		3910	306	PL 61×3/16 MITCH CUT 1-EA-pa & pa88		6/2
		1	pb	PL	61×3/8	64 5 1/2	61×64 1/8	3908	432			7/5
		1	pc	PL	60 7/8×3/8	41 1/16	61×41 1/4	3908	509			7/6
		1	pd	PL	25 3/16×1	5 0		3910	306	PL 61×3/16 MITCH CUT 1-EA-pd & pa66		7/8
		1	pf	PL	12×1/16	65 0	73 1/2 CUTS 6@12	3910	328			8/11
		1	pg	PL	12×1/16	63 6	73 1/2 CUTS 6@12	3910	324			8/13
		1	ph	PL	12×3/8	44 7 3/4	61 CUTS 5@12	3910	321			8/12
		1	pk	PL	12×3/8	43 1/4	61 CUTS 5@12	3910	321			8/14
		2	pf21	PL	4×3/8	4 11 15/16		3905	605	(FIE)		11/16
		2	pv98	PL	12 5/8×3/8	1 3		STK 3372	438	(BENT)		11/27
		4	pn8	PL	4×3/8	1 6 1/2		3905	605			11/26
		2	pw98	PL	11×3/8	1 3		STK 3372	438	(BENT)		11/27
		2	pt98	PL	11×5/8	0 11		STK 3774	322			11/24
		2	pa075	PL	11×1/2	0 11		STK 3680	405			11/25
		2	pv15	PL	7×3/4	1 7		STK 2674	316			11/21
		1	pa20	PL	7×1/16	0 10		3910	323			11/23
		1	pa46	PL	7×1/2	0 10		3910	401			11/22
		38	pk18	PL	4×3/8	4 11 15/16		3905	605	(FIE)		11/16
		2	pm98	PL	5 1/2×1/16	5 0		3910	307	(FIE)(MIE)		10/24
		4	pm18	PL	4×3/8	4 11 15/16		3905	605	(FIE)		11/16
		4	pm18	PL	4×3/8	4 11 15/16		3905	605	(FIE)		11/16
		2	pm	PL	5 1/2×5/8	5 0		3910	321	(MIE)(FIE)		10/23
		2	p945	PL	5 1/2×15/16	5 0		STK 2604	298	(MIE)(FIE)		11/2
		2	ISP1		SOLE PL					DET. ON SHT. #1		
		1	ISP2		SOLE PL					DET. ON SHT. #1		
		248			3/4 φ STUDS	0 4		27150	301	AUTO. END WELDED		
		20			7/8 φ BOLTS	0 24		26661	202	(A325) HEX. HD HEX. NUT		
		12			7/8 φ BOLTS	0 34			206	(A325) HEX. HD HEX. NUT		
		32			HARD. WASHERS FOR 7/8 φ BOLTS			26661	203	(A325)		
										SHEET TOTAL		

NASHVILLE BRIDGE COMPANY

SHOP ORDER NO. B5725 | WORK ORDER NO. | CONTRACT NO. C6736

COMMONWEALTH OF KENTUCKY DEPT. OF HIGHWAYS

BRIDGE OVER NORTHWESTERN PARKWAY & 22ND ST. JEFFERSON CO.

BILL NO. 100 | DRAWING NO. 100 & 101

FABRICATION BESSEMER PLANT

ITEM | WEIGHTS BY | CHECKED BY

SHIP	SHIPPING MARK	ITEM COUNT	ASSEMBLY MARK	SHAPE	SECTION	FINISHED LENGTH FT. IN.	ORDERED LENGTH FT. IN.	P.O. NO.	ITEM NO.	REMARKS	SPECIF. WEIGHT	A.I.S.C. WEIGHT
					MATERIAL ASTM-A36 (U.N.)							
ONE	100C4				GIRDER							
		1	pa	PL	60 5/16×3/8	53 1/16	61×53 1/4	3908	501			
		1	pb	PL	25 3/8×1	5 0		3910	306	PL 61×3/16 MITCH CUT 1-EA-pb & pa75		7/9
		1	pc	PL	12×5/8	55 2 7/16	73 1/2 CUTS 6@12	3910	320			7/2
		1	pd	PL	12×3/8	53 7 1/16	73 1/2 CUTS 6@12	3910	320			8/4
		2	pf100	PL	13×3/8	4 10		STK 3472	408			8/18
		1	pg100	PL	10×3/8	2 1		STK 3470	410			11/17
		4	ph100	PL	4×3/8	2 1		3905	615			11/12
		1	pk100	PL	12×3/8	2 1		STK 3470	410			11/20
		2	pm100	PL	5 1/2×1 3/8	5 0		STK 362	277	(FIE)(MIE)		11/17
		21	pk18	PL	4×3/8	4 11 15/16		3905	605	(FIE)		11/3
		4	pm18	PL	4×3/8	4 11 15/16						11/16
		1	pn18	PL	4×3/8	4 11 15/16						
		1	pf21	PL	4×3/8	4 11 15/16		3905	605	(FIE)		11/16
		2	pv98	PL	11×3/8	1 3		STK 3372	438	(BENT)		11/27
		2	pn8	PL	4×3/8	1 6 1/2		3905	605			11/26
		2	pa075	PL	11×1/2	0 11		STK 3680	405			11/25
		10			7/8 φ BOLTS	0 24		26661	202	(A325) HEX. HD HEX. NUT		
		10			HARD. WASHERS FOR 7/8 φ BOLTS				203	(A325)		
		156			3/4 φ STUDS	0 4		27150	301	AUTO. END WELDED		
		1	ISP2		SOLE PL					DET. ON SHT. #1		
										SHEET TOTAL		

110

WORK THIS DWG WITH DWGS. 98, 99 & 100

FOR GENERAL NOTES SEE DWG GN1
MATL ASTM A36 (UN)

APPROVED FOR SHOP
CHIEF DRAFTSMAN
CHIEF ENGINEER
REVISION NOTES

GIRDER DETAILS SPAN 3 & 4W
BRIDGE OVER NORTHWESTERN PARKWAY & 22ND ST.
DEPT. OF HIGHWAYS COMMONWEALTH OF KENTUCKY
JEFFERSON COUNTY FAP IGC 2(73) 2 OSC 2(13) 74A1
CONTRACTOR MATTINGLY BRIDGE CO.

NASHVILLE BRIDGE COMPANY
NASHVILLE, TENN.
BESSEMER PLANT

HOLES 15/16 φ OR NOTED 7/8 φ OR NOTED
FIELD CONN. 7/8 φ H.S.B.
SHOP PAINT SEE GN1
FIELD
DRAWN BY G.D. DATE 12-2-69
CHECKED BY DATE 12-9-69
DATE PRINTED

BILLS MATERIAL NO. 98, 99 & 100
CONT. C6736
S.O. B5725
DRAWING NO. 101

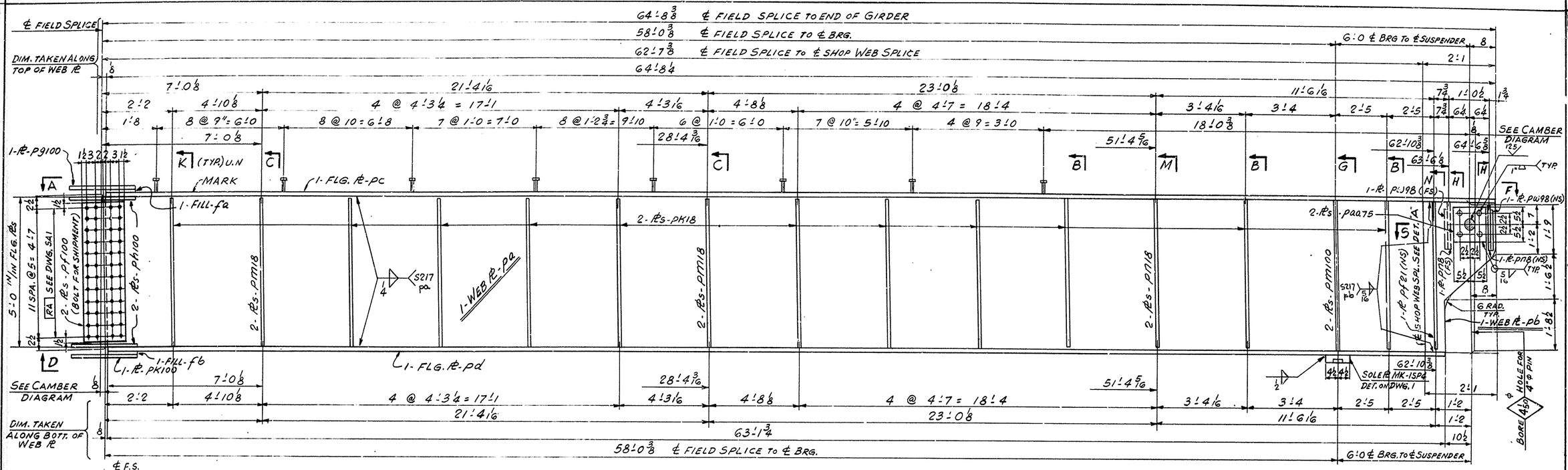

MAKE ONE GIRDER MK-102D4

MATERIAL ASTM - A36 (U.N.)
FOR GENERAL NOTES SEE DWG. GN1
WORK THIS DWG. WITH DWG. 105

111

GIRDER DETAILS SPAN 4W
BRIDGE OVER NORTH WESTERN PARKWAY & 22nd ST.
DEPARTMENT OF HIGHWAYS, COMMONWEALTH OF KENTUCKY
JEFFERSON COUNTY: F.A.P. IG4-3(32); BSG-023-76R
CONTRACTOR: MATTINGLY BRIDGE CO.

NASHVILLE BRIDGE COMPANY
NASHVILLE, TENN.
BESSEMER PLANT

APPROVED FOR SHOP	
WMF 2/11/70	CHIEF DRAFTSMAN
JLC 2/16/70	CHIEF ENGINEER

REVISION NOTES
APPR. 2/10/70

HOLES	15/16" ϕ OR NOTED	DRAWN BY	G.D. DATE 12-4-69
FIELD CONN.	7/8" ϕ H.S.B.	CHECKED BY	V.M. DATE 12/30/69
SHOP PAINT	SEE DWG. GN1	DATE PRINTED	
FIELD			

BILL OF MATERIAL NO.	CONT. C6736	DRAWING NO.
102	S.O. B5725	102

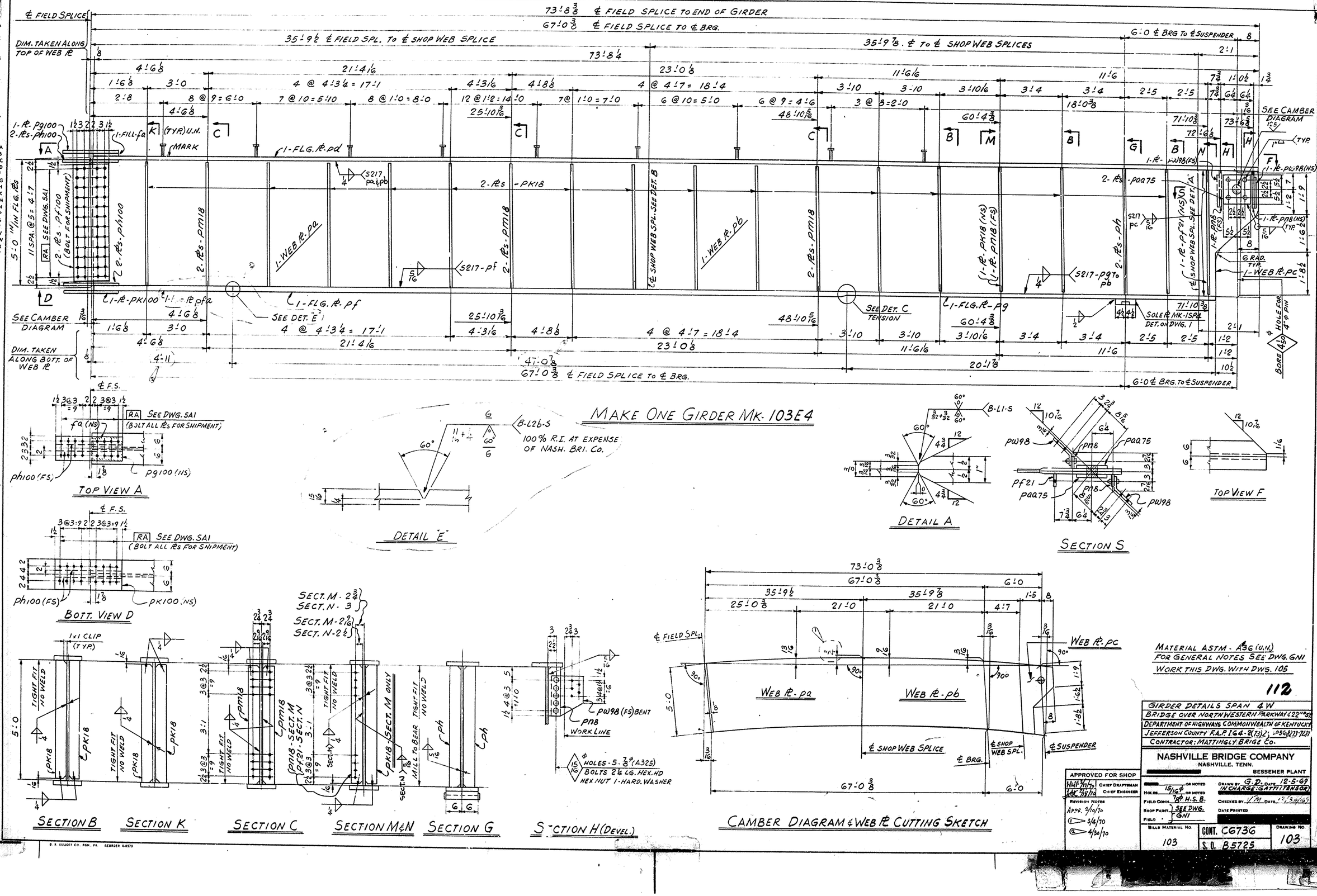

MAKE ONE GIRDER MK-103E4

MATERIAL ASTM - A36 (U.N.)
FOR GENERAL NOTES SEE DWG. GN1
WORK THIS DWG. WITH DWG. 105

112

GIRDER DETAILS SPAN 4W
BRIDGE OVER NORTH WESTERN PARKWAY & 22nd ST.
DEPARTMENT OF HIGHWAYS, COMMONWEALTH OF KENTUCKY
JEFFERSON COUNTY F.A.P. IG4-2(73)2; 1956(2)13-7(2)
CONTRACTOR: MATTINGLY BRIDGE CO.

NASHVILLE BRIDGE COMPANY
NASHVILLE, TENN.
BESSEMER PLANT

APPROVED FOR SHOP		
WMF 7/21/70	CHIEF DRAFTSMAN	
JAC 7/28/70	CHIEF ENGINEER	

REVISION NOTES
APPR. 3/10/70
1 3/4/70
2 4/20/70

HOLES	15/16 ø OR NOTED	DRAWN BY G.D.	DATE 12-5-69
		IN CHARGE: G.A. THYSENSON	
FIELD CONN.	7/8 ø H.S.B.	CHECKED BY	DATE 12/30/69
SHOP PAINT	SEE DWG. GN1	DATE PRINTED	
FIELD			
BILLS MATERIAL NO. 103	CONT. C6736	DRAWING NO. 103	
	S.O. B5725		

B. K. ELLIOTT CO., PGH., PA. REORDER A-8573

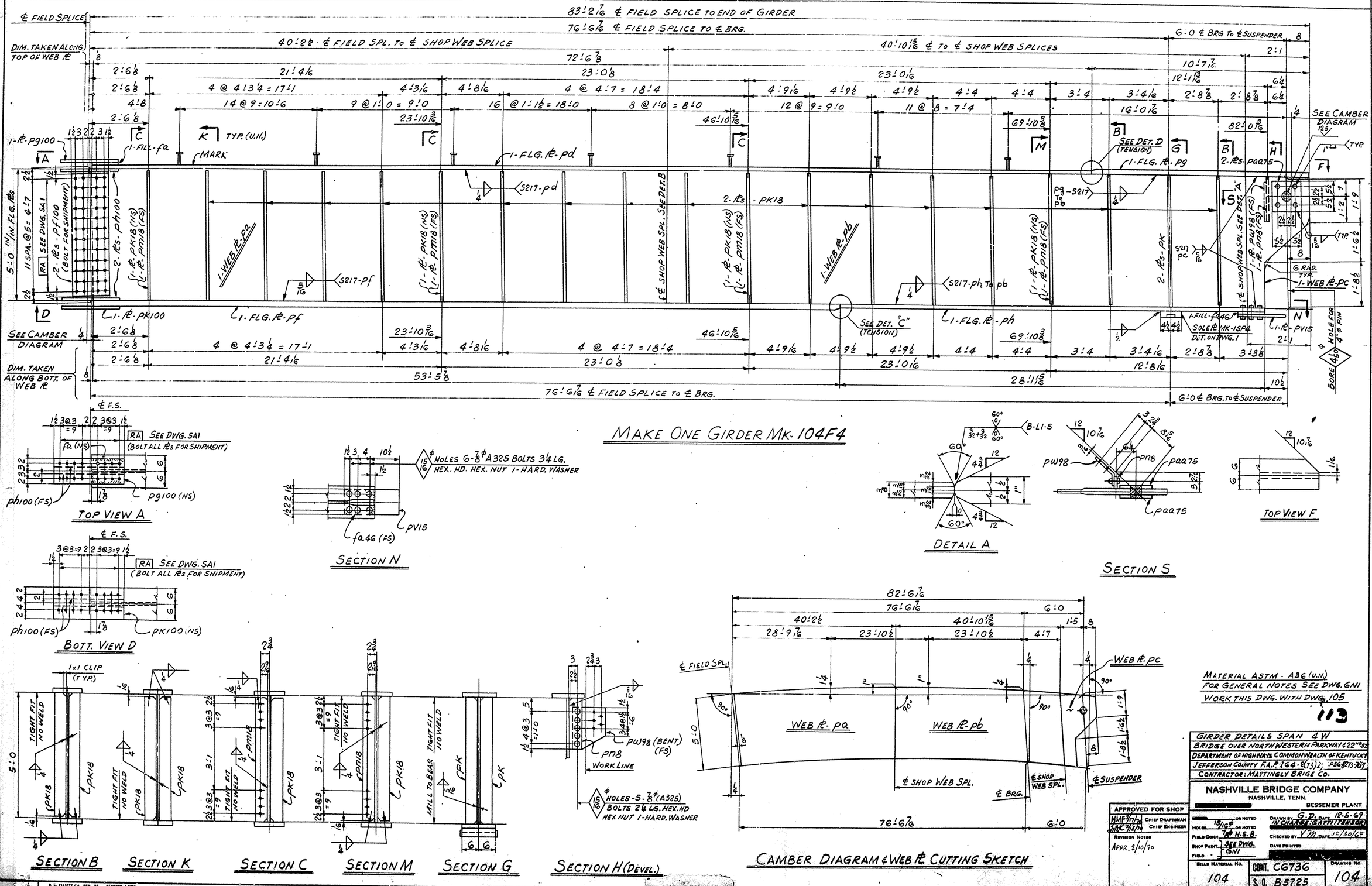

MAKE ONE GIRDER MK-104F4

MATERIAL ASTM - A36 (U.N.)
FOR GENERAL NOTES SEE DWG. GN1
WORK THIS DWG. WITH DWG. 105

113

GIRDER DETAILS SPAN 4W
BRIDGE OVER NORTH WESTERN PARKWAY & 22nd ST.
DEPARTMENT OF HIGHWAYS COMMONWEALTH OF KENTUCKY
JEFFERSON COUNTY F.A.P. I64-2(73)2; PSG-273-719
CONTRACTOR: MATTINGLY BRIDGE CO.

NASHVILLE BRIDGE COMPANY
NASHVILLE, TENN.
BESSEMER PLANT

APPROVED FOR SHOP
WMF 7/7/70 CHIEF DRAFTSMAN
JAK 7/7/70 CHIEF ENGINEER
REVISION NOTES
APPR. 2/10/70

HOLES 15/16 ⌀ OR NOTED
FIELD CONN. 7/8 ⌀ H.S.B.
SHOP PAINT } SEE DWG. GN1
FIELD }
DRAWN BY G.D. DATE 12-5-69
IN CHARGE J. GATTI
CHECKED BY DATE 12/30/69
DATE PRINTED

BILLS MATERIAL NO. 104
CONT. CG736
S.O. B5725
DRAWING NO. 104

D. C. ELLIOTT CO., PHIL., PA. REORDER A-8875

NASHVILLE BRIDGE COMPANY

SHOP ORDER NO. B5725 | WORK ORDER NO. | CONTRACT NO. C6736

COMMONWEALTH OF KENTUCKY DEPT. OF HIGHWAYS

BRIDGE OVER NORTHWESTERN PARKWAY & 22ND ST. JEFFERSON COUNTY

BILL NO. 102 | DRAWING NO. 102 & 105

FABRICATION BESSEMER PLANT

ITEM | WEIGHTS BY | CHECKED BY

MATERIAL ASTM-A36 (U.N.)

ONE 102D4 GIRDER

Ship	Shipping Mark	Item Quan.	Assembly Mark	Section	Finished Length	Ordered Length	P.O. No.	Item No.	Remarks	Spec. Weight	Misc. Weight	
		1	pa	PL 60½ x ⅜	62 7/16	61 x 62'-10	3908	433	PL 61 x 3/16 MATCH CUT 1-EA-pb & pa44			7/12
		1	pb	PL 25⅛ x 1	5 0		3910	306				7/2
		1	pc	PL 12 x ⅝	64 8¼	73¼ CUTS @ 6 EA	3910	319				8/21
		1	pd	PL 12 x ⅝	63 1¾	73¼ CUTS @ 6 EA	3910	319				8/23
		2	pf100	PL 13 x ⅜	4 10		STK 3485	408				11/17
		1	pg100	PL 10 x ⅜	2 1		STK 3740	410				11/18
		4	ph100	PL 4 x ⅜	2 1		3905	605				11/20
		1	pk100	PL 12 x ⅜	2 1		STK 3740	410				11/19
		22	pk18	PL 4 x ⅜	4 11 5/16		3905	605 (FIE)				11/16
		4	pm18	PL 4 x ⅜	4 11 5/16							
		2	pn18	PL 4 x ⅜	4 11 5/16							
		1	pf21	PL 4 x ⅜	4 11 5/16		3905	605 (FIE)				
		2	pm100	PL 5½ x 1⅜	5 0		STK 362	227 (FIE) (MIE)				11/16
		2	pw98	PL 11 x ⅜	1 3		STK 3372	438 (BENT)				11/3
		2	pn8	PL 4 x ⅜	1 6½		3905	605				11/27
		2	pa275	PL 11 x ½	0 11		STK 3680	445				11/26
		1	fa	PL 10 x 3/16	1 0⅜		STK 3448	614				11/25
		1	fb	PL 12 x 3/16	1 0⅜		STK 3448	614				25/5
		10		⅞ϕ BOLTS	0 24		26661	202 (A325)	HEX HD HEX NUT			25/6
		10		HARD WASHERS FOR ⅞ϕ BOLTS				203 (A325)				
		196		¾ϕ STUDS	0 4		27120	301	AUTO. END WELDED			
		1	1SP4	SOLE PL					DET. ON DWG #1			

SHEET TOTAL

NASHVILLE BRIDGE COMPANY

SHOP ORDER NO. B5725 | WORK ORDER NO | CONTRACT NO C6736

COMMONWEALTH OF KENTUCKY DEPT. OF HIGHWAYS

BRIDGE OVER NORTHWESTERN PARKWAY & 22ND ST. JEFFERSON COUNTY

BILL NO. 103 | DRAWING NO. 103 & 105

FABRICATION BESSEMER PLANT

ITEM | WEIGHTS BY | CHECKED BY

MATERIAL ASTM-A36 (U.N.)

ONE 103E4 GIRDER

Ship	Shipping Mark	Item Quan.	Assembly Mark	Section	Finished Length	Ordered Length	P.O. No.	Item No.	Remarks	Spec. Weight	Misc. Weight	
		1	pa	PL 61 x ⅜	35 9⅜	61 x 36'-0	3908	513				
		1	pb	PL 61 x ⅜	35 10⅛	61 x 36'-0	3908	513				7/15
		1	pc	PL 25⅜ x 1	5 0		3910	306	PL 61 x 3/16 MATCH CUT 1-EA-pc & pa98			7/15
		1	pd	PL 12 x ⅝	73 8¼	73¼ CUTS @ 6 EA	3910	318				7/2
(1)		1	pf	PL 12 x 1⅝	47 0⅛	61 CUTS 5 EA	3910	307				8/26
		1	pg	PL 12 x ⅝	20 1⅞	61 CUTS 5 EA	3910	321				8/19
		2	pf100	PL 13 x ⅜	4 10		STK 3485	408				8/20
		1	pg100	PL 10 x ⅜	2 1		STK 3740	410				11/17
		4	ph100	PL 4 x ⅜	2 1		3905	605				11/18
		1	pk100	PL 12 x ⅜	2 1		STK 3740	410				11/20
		27	pk18	PL 4 x ⅜	4 11 5/16		3905	605 (FIE)				11/19
		6	pm18	PL 4 x ⅜	4 11 5/16							11/16
		1	pn18	PL 4 x ⅜	4 11 5/16							
		1	pf21	PL 4 x ⅜	4 11 5/16		3905	605 (FIE)				
		2	ph	PL 5½ x 1 1/16	5 0		3910	224 (FIE) (MIE)				11/16
		2	pw98	PL 11 x ⅜	1 3		STK 3372	438 (BENT)				11/4
		2	pn8	PL 4 x ⅜	1 6½		3905	605				11/27
		2	pa275	PL 11 x ½	0 11		STK 3680	405				11/26
		1	fa	PL 10 x 5/16	1 0⅜		STK 2473	601				11/25
(1)		1	pfa	PL 12 x 5/16	4 11		STK					25/8
		10		⅞ϕ BOLTS	0 24		26661	202 (A325)	HEX HD HEX NUT			
		10		HARD WASHERS FOR ⅞ϕ BOLTS				203 (A325)				
		230		¾ϕ STUDS	0 4		27120	301	AUTO. END WELDED			
		1	1SP4	SOLE PL					DET. ON DWG #1			

SHEET TOTAL

NASHVILLE BRIDGE COMPANY

SHOP ORDER NO. B5725 | WORK ORDER NO. | CONTRACT NO C6736

COMMONWEALTH OF KENTUCKY DEPT. OF HIGHWAYS

BRIDGE OVER NORTHWESTERN PARKWAY & 22ND ST. JEFFERSON CO.

BILL NO. 104 | DRAWING NO. 104 & 105

FABRICATION BESSEMER PLANT

ITEM | WEIGHTS BY | CHECKED BY

MATERIAL ASTM-A36 (U.N.)

ONE 104F4 GIRDER

Ship	Shipping Mark	Item Quan.	Assembly Mark	Section	Finished Length	Ordered Length	P.O. No.	Item No.	Remarks	Spec. Weight	Misc. Weight	
		1	pa	PL 61 x ⅜	40 2⅜	61 x 40'-5	3908	492				
		1	pb	PL 61 x ⅜	40 11⅛	61 x 41'-1	3908	421				7/12
		1	pc	PL 25⅛ x 1	5 0		3910	306	PL 61 x 3/16 MATCH CUT 1-EA-pc & pa61			7/9
		1	pd	PL 12 x 7/16	72 6⅜	73¼ CUTS @ 12	3910	336				7/12
		1	pf	PL 12 x ⅜	53 5⅞	12 x 5 3/8	3910	226				9/4
		1	pg	PL 12 x ⅝	10 7⅛	61 CUTS 5 EA	3910	321				9/6
		1	ph	PL 12 x ⅜	28 1 5/16	61 CUTS 5 EA	3910	321				9/5
		2	pf100	PL 13 x ⅜	4 10		STK 3485	408				9/5
		1	pg100	PL 10 x ⅜	2 1		STK 3740	410				11/7
		4	ph100	PL 4 x ⅜	2 1		3905	605				11/8
		1	pk100	PL 12 x ⅜	2 1		STK 3740	410				11/20
		32	pk18	PL 4 x ⅜	4 11⅛		3905	605 (FIE)				11/19
		3	pm18	PL 4 x ⅜	4 11⅛		3905	605 (FIE)				11/16
		1	pn18	PL 4 x ⅜	4 11⅛		3905	605 (FIE)				11/16
		2	pk	PL 5½ x ½	5 0		3910	223 (MIE) (FIE)				11/16
		1	pw98	PL 11 x ⅜	1 3		STK 3372	438 (BENT)				11/15
		1	pn8	PL 4 x ⅜	1 6½		3905	605				11/27
		2	pa275	PL 11 x ½	0 11		STK 3680	405				11/26
		1	pv15	PL 7 x ¾	1 7		STK 2474	316				11/25
		1	fa	PL 10 x 1/16	1 0⅜		STK 1272	612				11/21
		1	pa46	PL 7 x ½	0 10		3910	401				25/15
		5		⅞ϕ BOLTS	0 24		26661	202 (A325)	HEX HD HEX NUT			11/22
		5		HARD WASHERS FOR ⅞ϕ BOLTS				203 (A325)				
		284		¾ϕ STUDS			27120	301	AUTO. END WELDED			
		1	1SP4	SOLE PL					DET. ON DWG #1			

SHEET TOTAL

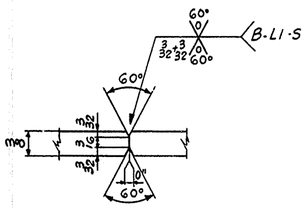

DETAIL B

(FOR GIRDER 103E4 & 104F4 ONLY)

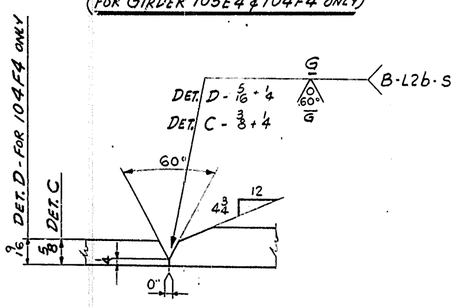

DETAIL "C" & D

(FOR GIRDER 103E4 & 104F4 ONLY)

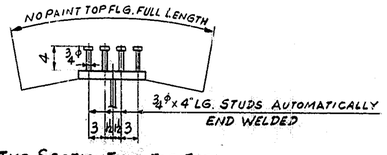

TYP. SECTION THRU TOP FLG.

WORK THIS DWG WITH DWGS 102, 103, 104

FOR GENERAL NOTES SEE DWG GN1

MATL ASTM A36 (U.N.)

114

GIRDER DETAILS SPAN 4 W

BRIDGE OVER NORTHWESTERN PARKWAY & 22ND ST.

DEPT. OF HIGHWAYS COMMONWEALTH OF KENTUCKY

JEFFERSON COUNTY PAP 164-2(1) & 56-8713-7181

CONTRACTOR MATTINGLY BRIDGE CO.

NASHVILLE BRIDGE COMPANY

NASHVILLE, TENN.

BESSEMER PLANT

APPROVED FOR SHOP

NWF 7/17/70 CHIEF DRAFTSMAN

JHZ 7/17/70 CHIEF ENGINEER

REVISION NOTES

4/30/70

HOLES 15/16ϕ OR NOTED

7/8ϕ OR NOTED

FIELD CONN. 7/8ϕ H.S.B.

SHOP PAINT } SEE GN1

FIELD }

DRAWN BY G.D. DATE 12-5-69

IN CHARGE - GARY (FRANCE)

CHECKED BY VM DATE 12/10/69

DATE PRINTED

BILLS MATERIAL NO. 102, 103, 104

CONT. C6736

S.O. B5725

DRAWING NO. 105

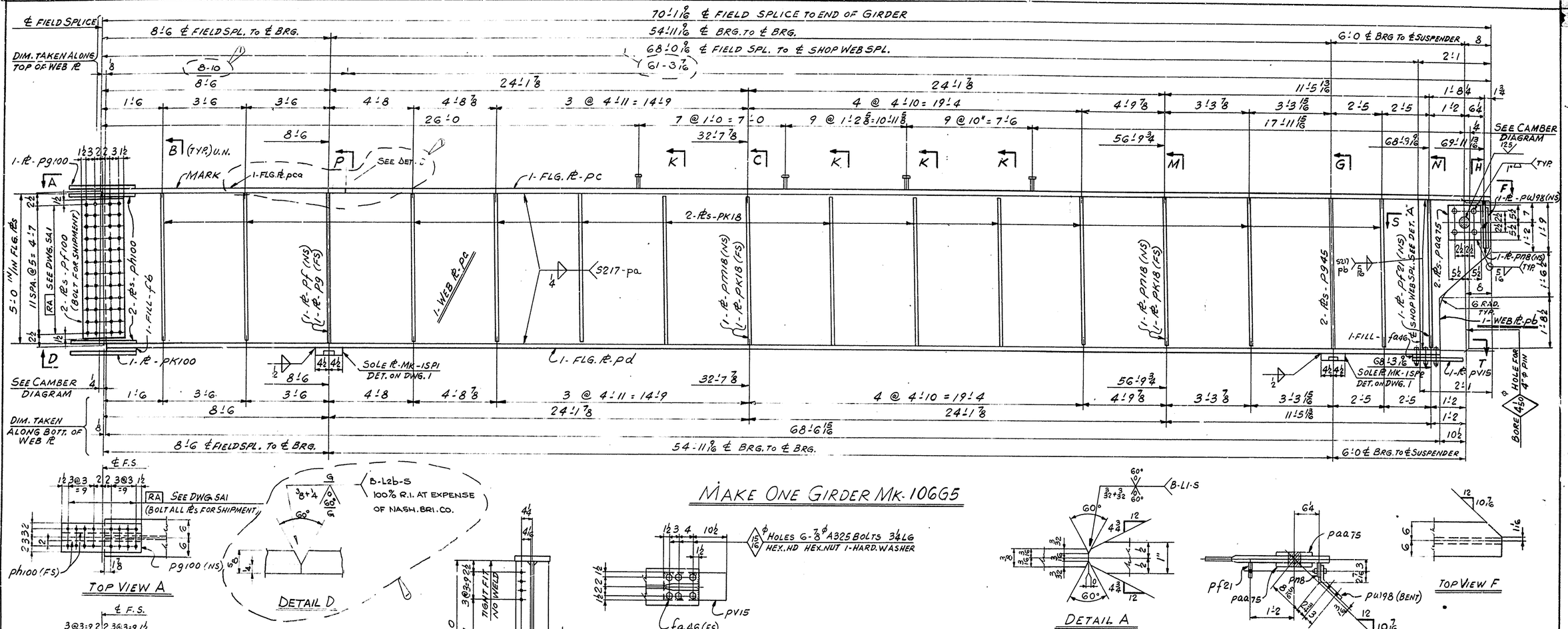

MAKE ONE GIRDER MK-106G5

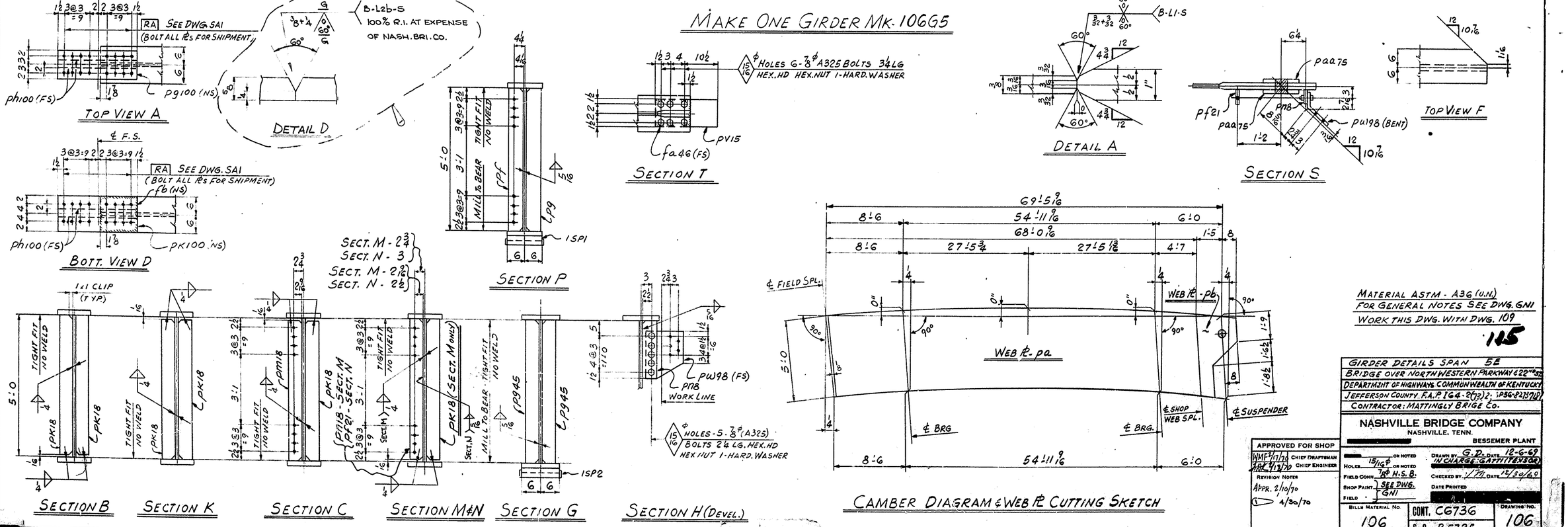

MATERIAL ASTM - A36 (U.N.)
FOR GENERAL NOTES SEE DWG. GN1
WORK THIS DWG. WITH DWG. 109

115

GIRDER DETAILS SPAN 5E
BRIDGE OVER NORTH WESTERN PARKWAY & 22ND ST.
DEPARTMENT OF HIGHWAYS, COMMONWEALTH OF KENTUCKY
JEFFERSON COUNTY F.A.P. I64-2(73)2; PBG-82(19)
CONTRACTOR: MATTINGLY BRIDGE CO.

NASHVILLE BRIDGE COMPANY
NASHVILLE, TENN.
BESSEMER PLANT

Holes	15/16φ or noted
Field Conn.	7/8φ H.S.B.
Shop Paint	SEE DWG. GN1
Field	
Drawn by	G.D. Date 12-6-69
In charge	GATTI (TAYSOR)
Checked by	Date 12/30/69
Date Printed	
Bill Material No.	106
Cont.	C6736
S.O.	B5725
Drawing No.	106

APPROVED FOR SHOP
WMF 1/7/70 Chief Draftsman
JBK 1/13/70 Chief Engineer
Revision Notes
Appr. 2/10/70
1 4/30/70

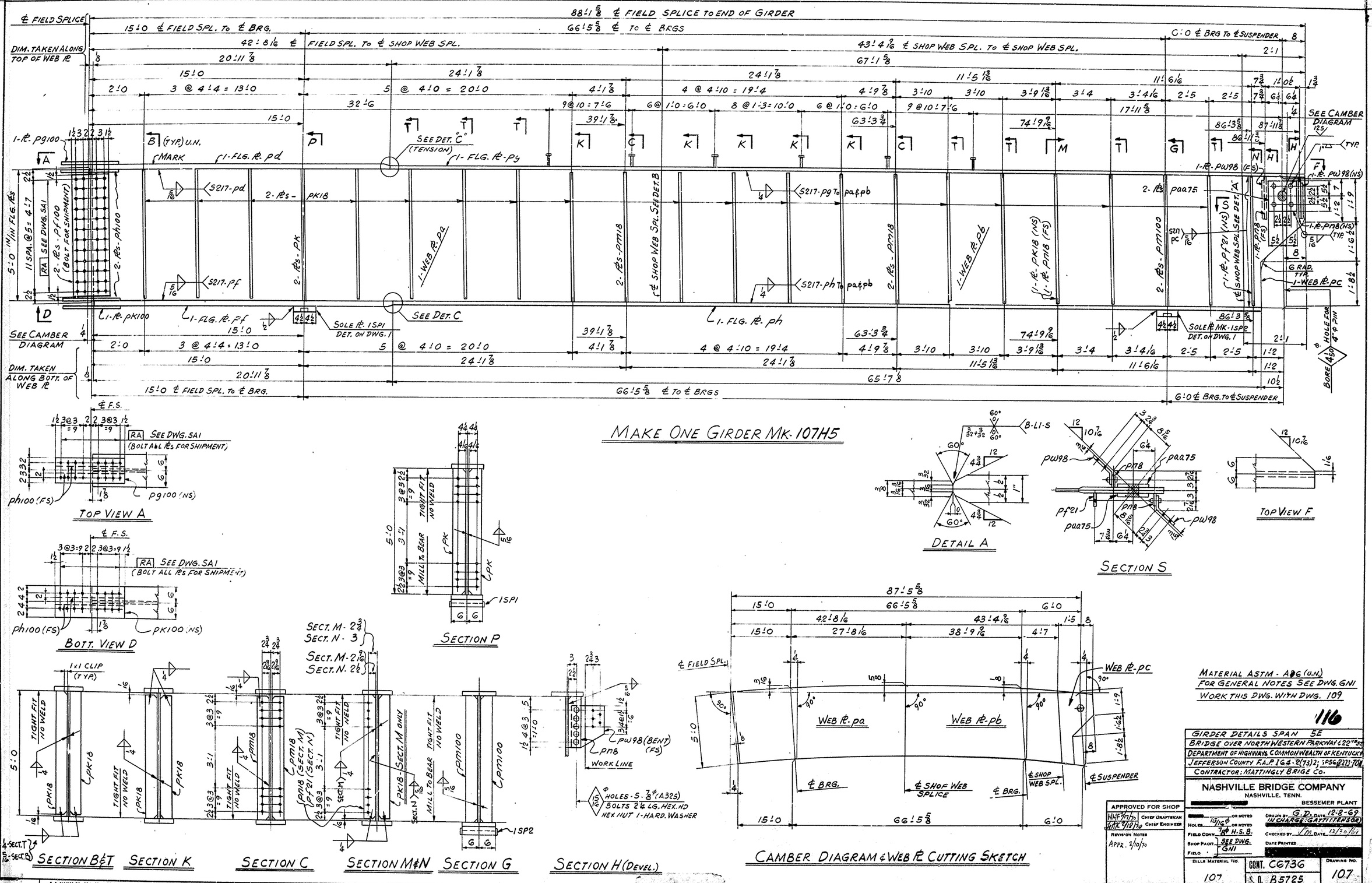

MATERIAL ASTM - A36 (U.N.)
FOR GENERAL NOTES SEE DWG. GN1
WORK THIS DWG. WITH DWG. 109

116

GIRDER DETAILS SPAN 5E
BRIDGE OVER NORTH WESTERN PARKWAY & 22nd ST.
DEPARTMENT OF HIGHWAYS, COMMONWEALTH OF KENTUCKY
JEFFERSON COUNTY F.A.P. I64-2(73); SPSG(221)-104
CONTRACTOR: MATTINGLY BRIDGE CO.

NASHVILLE BRIDGE COMPANY
NASHVILLE, TENN.
BESSEMER PLANT

APPROVED FOR SHOP		DRAWN BY G.D.	DATE 12-8-69
WHF 2/10/70	CHIEF DRAFTSMAN	IN CHARGE: G.A. THIERSON	
JHK 2/10/70	CHIEF ENGINEER	CHECKED BY	DATE 12/20/69
REVISION NOTES: APPR. 2/10/70		DATE PRINTED	
HOLES	15/16" ϕ OR NOTED		
FIELD CONN.	7/8" ϕ H.S.B. OR NOTED		
SHOP PAINT	SEE DWG. GN1		
FIELD			
BILLS MATERIAL NO. 107	CONT. C6736	S.O. B5725	DRAWING NO. 107

B. K. ELLIOTT CO. PGH., PA. REORDER A-8973

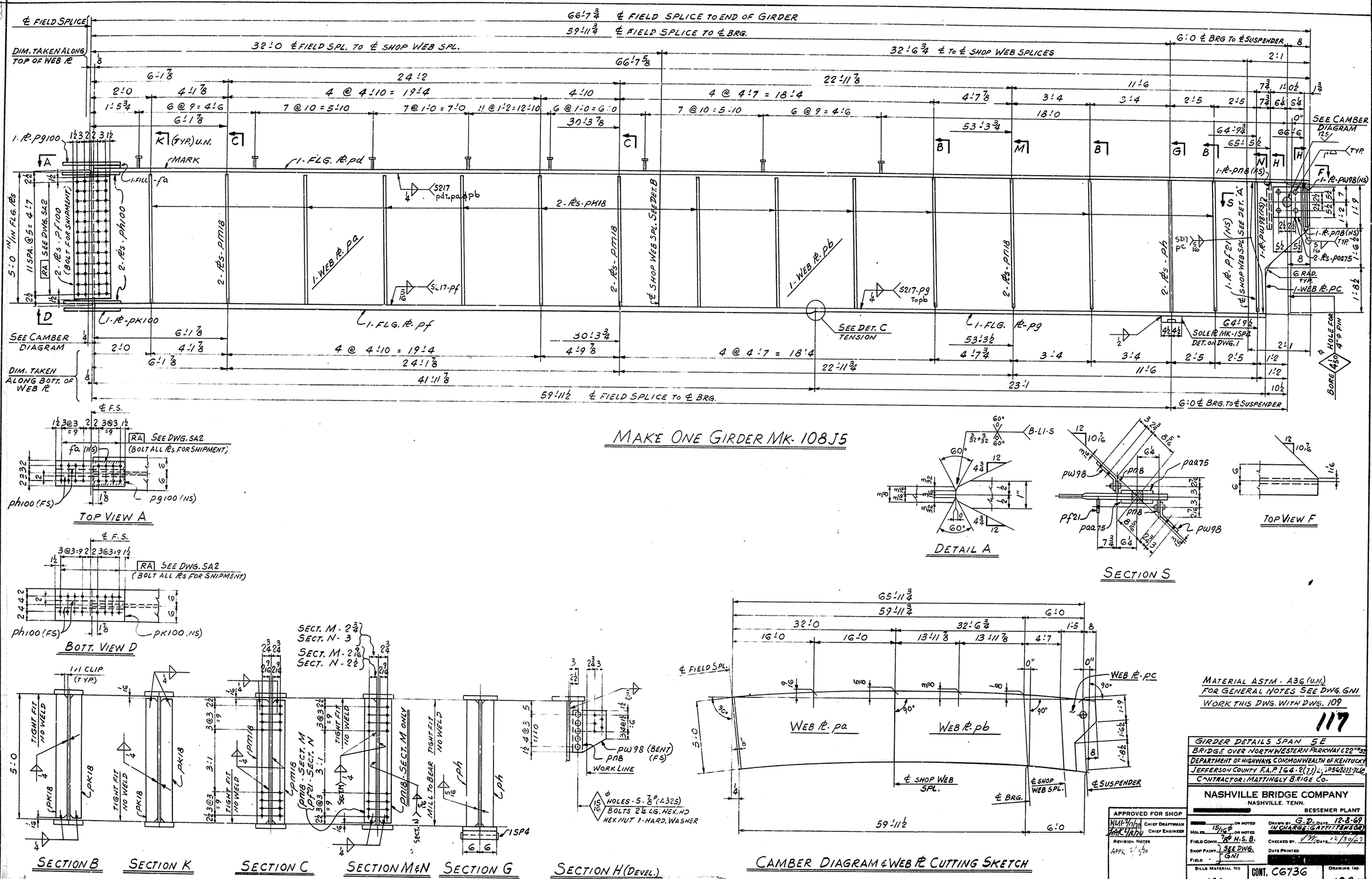

MATERIAL ASTM - A36 (U.N.)
FOR GENERAL NOTES SEE DWG. GN1
WORK THIS DWG. WITH DWG. 109

117

GIRDER DETAILS SPAN 5E
BRIDGE OVER NORTH WESTERN PARKWAY & 22ND ST.
DEPARTMENT OF HIGHWAYS, COMMONWEALTH OF KENTUCKY
JEFFERSON COUNTY F.A.P. I 64-8(73) & SPS68213-7L&C
CONTRACTOR: MATTINGLY BRIDGE CO.

NASHVILLE BRIDGE COMPANY
NASHVILLE, TENN.
BESSEMER PLANT

APPROVED FOR SHOP
Chief Draftsman
Chief Engineer
REVISION NOTES
APPR. 2/10/70

HOLES 15/16 ϕ OR NOTED
FIELD CONN. 7/8 ϕ H.S.B.
SHOP PAINT SEE DWG. GN1
FIELD

DRAWN BY G.D. DATE 12-2-69
IN CHARGE GATTI
CHECKED BY DATE 12/30/69
DATE PRINTED

BILLS MATERIAL NO	CONT. C6736	DRAWING NO
108	S.O. B5725	108

B. K. ELLIOTT CO., PGH., PA. REORDER A-8273

NASHVILLE BRIDGE COMPANY

SHOP ORDER NO. B5725 | WORK ORDER NO. | CONTRACT NO. C6736

COMMONWEALTH OF KENTUCKY DEPT. OF HIGHWAYS

BRIDGE OVER NORTHWESTERN PARKWAY & 22ND ST. JEFFERSON COUNTY

BILL NO. 106 | DRAWING NO. 106 & 109

FABRICATION BESSEMER PLANT

ITEM | WEIGHTS BY | CHECKED BY

SHIP	SHIPPING MARK	ITEM QUANT.	ASSEMBLY MARK		SECTION	FINISHED LENGTH FT. IN.	ORDERED LENGTH FT. IN.	P.O. NO.	ITEM NO.	REMARKS	SPEC. WT.	AISC WEIGHT	
					MATERIAL ASTM-A36 (U.N.)								
ONE 106G5					GIRDER								
		1	pa	PL	60 × 3/8	68 0 1/16	60 2 1/8 × 62'-4	3908	517	PL 61 × 3'-6 MATCH CUT 1-EA-pb-pa60.			7/22
		1	pb	PL	25 1/4 × 1	5 0		3910	306				7/2
		1	pc	PL	12 × 5/8	6 3/16	7 3/4 CUTS 6 GEN	3910	318				9/13
		1	pd	PL	12 × 3/8	68 6 1/16	6 7/8 CUTS 6 GEN	3910	318				9/14
		2	pf100	PL	13 × 3/8	4 10		STK 3425	408				11/17
		1	pg100	PL	10 × 3/8	2 1		STK 3740	410				11/18
		4	ph100	PL	4 × 3/8	2 1		3905	605				11/20
		1	pk100	PL	12 × 3/8	2 1		STK 3740	410				11/19
		26	pk18	PL	4 × 3/8	4 11 13/16		3905	605	(FIE)			11/16
		1	pm18	PL	4 × 3/8	4 11 13/16							
		1	pn18	PL	4 × 3/8	4 11 13/16							
		1	pf21	PL	4 × 3/8	4 11 13/16		3905	605	(FIE)			11/16
		1	pf	PL	5 1/2 × 1/8	5 0		STK 3790	309	(MIE) (FIE)			11/8
		1	pg	PL	5 1/2 × 7/8	5 0		STK 3790	309	(MIE) (FIE)			11/8
		2	p945	PL	5 1/2 × 1 7/16	5 0		STK 3864	288	(MIE) (FIE)			11/10
		1	pw98	PL	11 × 3/8	1 3		STK 3372	438	(BENT)			11/27
		1	pn8	PL	4 × 3/8	1 6 1/2		3905	605				11/26
		2	pa075	PL	11 × 1/2	0 11		STK 3680	405				11/25
		1	pv15	PL	7 × 3/4	1 7		STK 2670	336				11/21
		1	fa46	PL	7 × 1/2	0 10		3910	401				11/22
		1	fb	PL	12 × 1/8	1 0 3/8		STK 1420	615				25/4
		6			7/8 ϕ BOLTS	0 3 4		26661	206	(A325) HEX HD HEX NUT			
		5			7/8 ϕ BOLTS	0 2 4			201	(A325) HEX HD HEX NUT			
		11			HARD WASHERS FOR 7/8 ϕ BOLTS				203	(A325)			
		1	pca	PL	12 × 5/8	8 10		STK					
		104			3/4 ϕ STUDS	0 4		27120	301	AUTO. END WELDED			
		1	ISP2		SOLE PL					DET. ON DWG. 1			
		1	ISP1		SOLE PL					DET. ON DWG. 1			

SHEET TOTAL

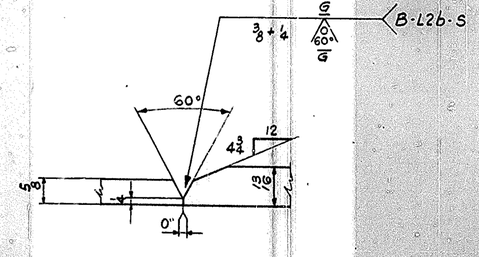

DETAIL "C"

(FOR GIRDER 107H5 & 108J5 ONLY)

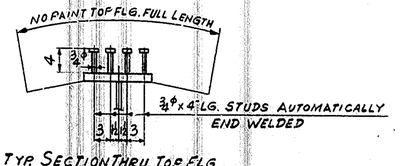

TYP. SECTION THRU TOP FLG.

NASHVILLE BRIDGE COMPANY

SHOP ORDER NO. B5725 | WORK ORDER NO. | CONTRACT NO. C6736

COMMONWEALTH OF KENTUCKY DEPT. OF HIGHWAYS

BRIDGE OVER NORTHWESTERN PARKWAY & 22ND ST. JEFFERSON COUNTY

BILL NO. 107 | DRAWING NO. 107 & 109

FABRICATION BESSEMER PLANT

ITEM | WEIGHTS BY | CHECKED BY

SHIP	SHIPPING MARK	ITEM QUANT.	ASSEMBLY MARK		SECTION	FINISHED LENGTH FT. IN.	ORDERED LENGTH FT. IN.	P.O. NO.	ITEM NO.	REMARKS	SPEC. WT.	AISC WEIGHT	
					MATERIAL ASTM-A36 (U.N.)								
ONE 107H5					GIRDER								
		1	pa	PL	60 3/8 × 3/8	42 7 1/8	61 × 42'-11	3905	506				7/25
		1	pb	PL	60 3/8 × 3/8	43 4 1/8	61 × 43'-8	3908	505	PL 61 × 3'-6 MATCH CUT 1-EA-PL-pa25			7/26
		1	pc	PL	25 1/4 × 1	5 0		3910	306				7/2
		1	pd	PL	12 × 1 3/16	20 11 3/8		3910	311				9/20
		1	pf	PL	12 × 1 3/16	20 11 3/8		3910	311				9/20
		1	pg	PL	12 × 5/8	67 3/8	7 3/4 CUTS 6 GEN	3910	318				9/21
		1	ph	PL	12 × 5/8	65 7 3/8	7 3/4 CUTS 6 GEN	3910	319				9/22
		2	pf100	PL	13 × 3/8	4 10		STK 3425	408				11/17
		1	pg100	PL	10 × 3/8	2 1		STK 3740	410				11/18
		4	ph100	PL	4 × 3/8	2 1		3905	605				11/20
		1	pk100	PL	12 × 3/8	2 1		STK 3740	410				11/19
		33	pk18	PL	4 × 3/8	4 11 13/16		3905	605	(FIE)			11/16
		4	pm18	PL	4 × 3/8	4 11 13/16							
		1	pn18	PL	4 × 3/8	4 11 13/16							
		1	pf21	PL	4 × 3/8	4 11 13/16		3905	605	(FIE)			
		2	pk	PL	5 1/2 × 1	5 0		3910	304	(MIE) (FIE)			
		2	pm100	PL	5 1/2 × 1 3/8	5 0		STK 362	227	(MIE) (FIE)			
		2	pw98	PL	11 × 3/8	1 3		STK 3372	438	(BENT)			
		2	pn8	PL	4 × 3/8	1 6 1/2		3905	605				
		2	pa075	PL	11 × 1/2	0 11		STK 3680	405				
		10			7/8 ϕ BOLTS	0 2 4		26661	202	(A325) HEX HD HEX NUT			
		10			HARD WASHERS FOR 7/8 ϕ BOLTS				203	(A325)			
		156			3/4 ϕ STUDS	0 4		27120	301	AUTO. END WELDED			
		1	ISP1		SOLE PL					DET. ON DWG. NO. 1			
		1	ISP2		SOLE PL								

SHEET TOTAL

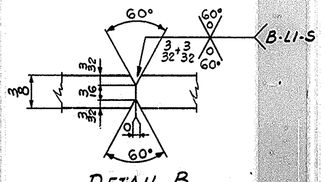

DETAIL B

(FOR GIRDER 107H5 & 108J5 ONLY)

NASHVILLE BRIDGE COMPANY

SHOP ORDER NO. B5725 | WORK ORDER NO. | CONTRACT NO. C6736

COMMONWEALTH OF KENTUCKY DEPT. OF HIGHWAYS

BRIDGE OVER NORTHWESTERN PARKWAY & 22ND ST. JEFFERSON CO.

BILL NO. 108 | DRAWING NO. 108 & 109

FABRICATION BESSEMER PLANT

ITEM | WEIGHTS BY | CHECKED BY

SHIP	SHIPPING MARK	ITEM QUANT.	ASSEMBLY MARK		SECTION	FINISHED LENGTH FT. IN.	ORDERED LENGTH FT. IN.	P.O. NO.	ITEM NO.	REMARKS	SPEC. WT.	AISC WEIGHT	
					MATERIAL ASTM-A36 (U.N.)								
ONE 108J5					GIRDER								
		1	pa	PL	60 3/8 × 3/8	31 11 3/8	61 × 32'-2	3908	505				7/29
		1	pb	PL	60 3/8 × 3/8	32 6 3/8	61 × 32'-11	3908	504	PL 61 × 3'-6 MATCH CUT 1-EA-PCF-pa65			7/27
		1	pc	PL	25 × 1	5 0		3910	306				7/2
		1	pd	PL	12 × 5/8	66 7 3/8	7 3/4 × 66'-6 CUTS 6	3910	318				9/29
		1	pf	PL	12 × 1 3/16	41 11 3/8		3910	311				9/30
		1	pg	PL	12 × 5/8	23 1	7 3/4 CUTS 6 GEN	3910	318				9/31
		2	pf100	PL	13 × 3/8	4 10		STK 3425	408				11/17
		1	pg100	PL	10 × 3/8	2 1		STK 3740	410				11/18
		4	ph100	PL	4 × 3/8	2 1		3905	605				11/20
		1	pk100	PL	12 × 3/8	2 1		STK 3740	410				11/19
		22	pk18	PL	4 × 3/8	4 11 13/16		3905	605	(FIE)			11/16
		4	pm18	PL	4 × 3/8	4 11 13/16							
		2	pn18	PL	4 × 3/8	4 11 13/16							
		1	pf21	PL	4 × 3/8	4 11 13/16		3905	605	(FIE)			11/16
		2	ph	PL	5 1/2 × 1 7/16	5 0		3910	224	(MIE) (FIE)			11/4
		2	pw98	PL	11 × 3/8	1 3		STK 3372	438	(BENT)			11/27
		2	pn8	PL	4 × 3/8	1 6 1/2		3905	605				11/26
		2	pa075	PL	11 × 1/2	0 11		STK 3680	445				11/25
		1	fa	PL	10 × 7/16	1 0 3/8		3440	614				8/15
		10			7/8 ϕ BOLTS	0 2 4		26661	202	(A325) HEX HD HEX NUT			
		10			HARD WASHERS FOR 7/8 ϕ BOLTS				203	(A325)			
		1	ISP4		SOLE PL					DET. ON DWG. #1			
		204			3/4 ϕ STUDS			27120	301	AUTO. END WELDED			

SHEET TOTAL

118

WORK THIS DWG WITH DWGS. 106, 107, 108

FOR GENERAL NOTES SEE DWG GN1

MATL ASTM A36 (UN)

GIRDER DETAILS SPAN 5E	
BRIDGE OVER NORTHWESTERN PARKWAY & 22ND ST.	
DEPT. OF HIGHWAYS COMMONWEALTH OF KENTUCKY	
JEFFERSON COUNTY I-PAP IC4-2(73)2; SP86 8273-7481	
CONTRACTOR MATTINGLY BRIDGE CO.	

NASHVILLE BRIDGE COMPANY
NASHVILLE, TENN.
BESSEMER PLANT

APPROVED FOR SHOP: CHIEF DRAFTSMAN / CHIEF ENGINEER — JAK 4/15/70

REVISION NOTES: 4/30/70

HOLES: 15/16 ϕ OR NOTED; 13/16 ϕ OR NOTED

FIELD CONN.: B.H.S.B.

SHOP PAINT: SE8

FIELD: GN1

DRAWN BY: G.D. DATE 12-9-69 IN CHARGE DFT. DEPT.

CHECKED BY: JM DATE 12/30/69

DATE PRINTED:

BILL MATERIAL NO.	CONT.	DRAWING NO.
106, 107, 108	C6736	109
	S.O. B5725	

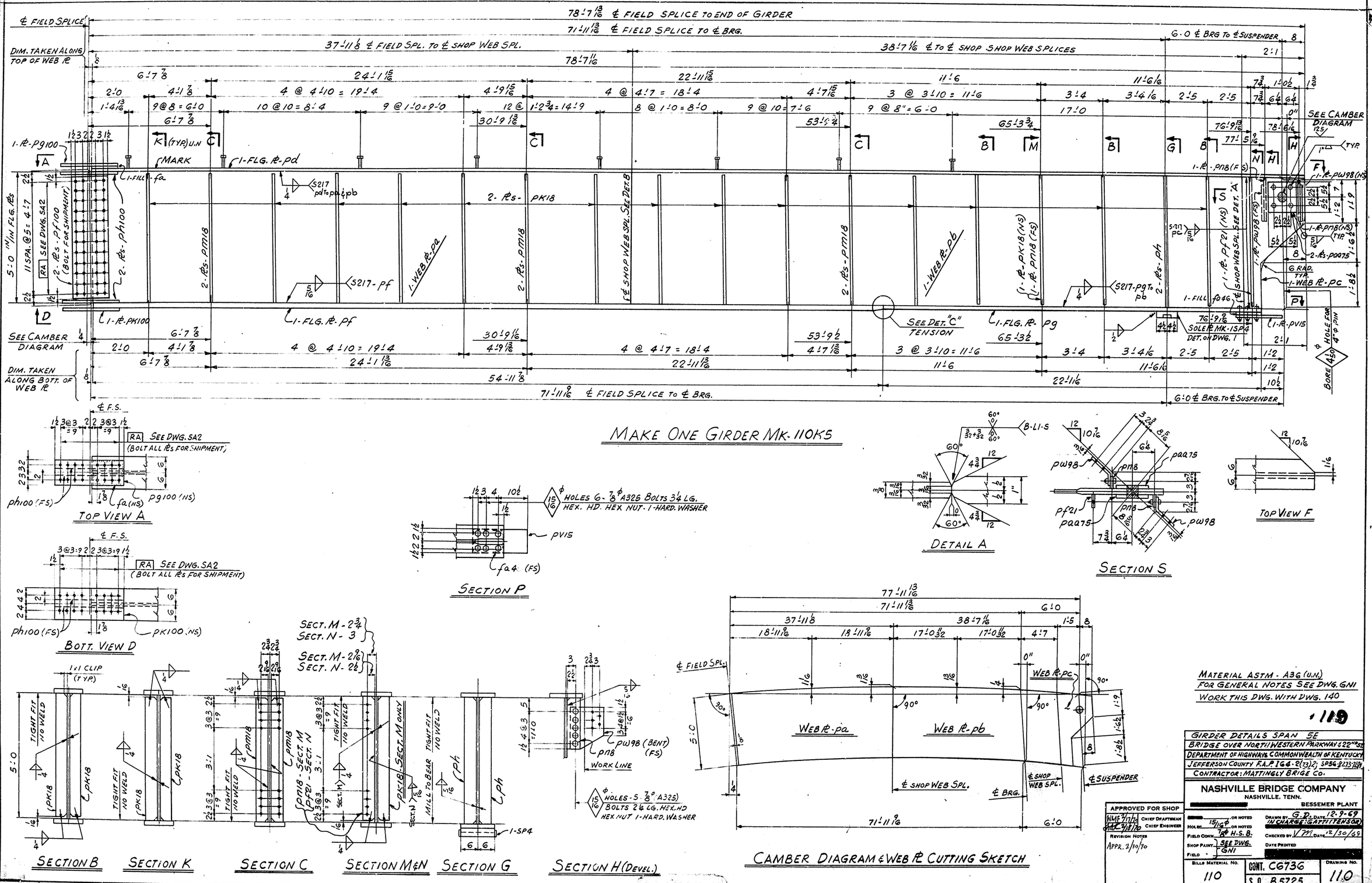

MATERIAL ASTM - A36 (U.N.)
FOR GENERAL NOTES SEE DWG. GN1
WORK THIS DWG. WITH DWG. 140

119

GIRDER DETAILS SPAN 5E
BRIDGE OVER NORTH WESTERN PARKWAY & 22ND ST.
DEPARTMENT OF HIGHWAYS, COMMONWEALTH OF KENTUCKY
JEFFERSON COUNTY F.A.P. I64-2(73)2; SP56-273-7(4)
CONTRACTOR: MATTINGLY BRIDGE CO.

NASHVILLE BRIDGE COMPANY
NASHVILLE, TENN.
BESSEMER PLANT

APPROVED FOR SHOP	
NWF 2/11/70	CHIEF DRAFTSMAN
JHC 2/18/70	CHIEF ENGINEER
REVISION NOTES	
APPR. 2/10/70	

HOLES	15/16" ⌀ OR NOTED
FIELD CONN.	7/8" ⌀ H.S.B.
SHOP PAINT	SEE DWG. GN1
FIELD	
DRAWN BY	G.D. DATE 12-9-69
IN CHARGE: G.A. FITZENSON	
CHECKED BY	V.P.I. DATE 12/30/69
DATE PRINTED	
BILLS MATERIAL NO.	110
CONT.	C6736
S.O.	B5725
DRAWING NO.	110

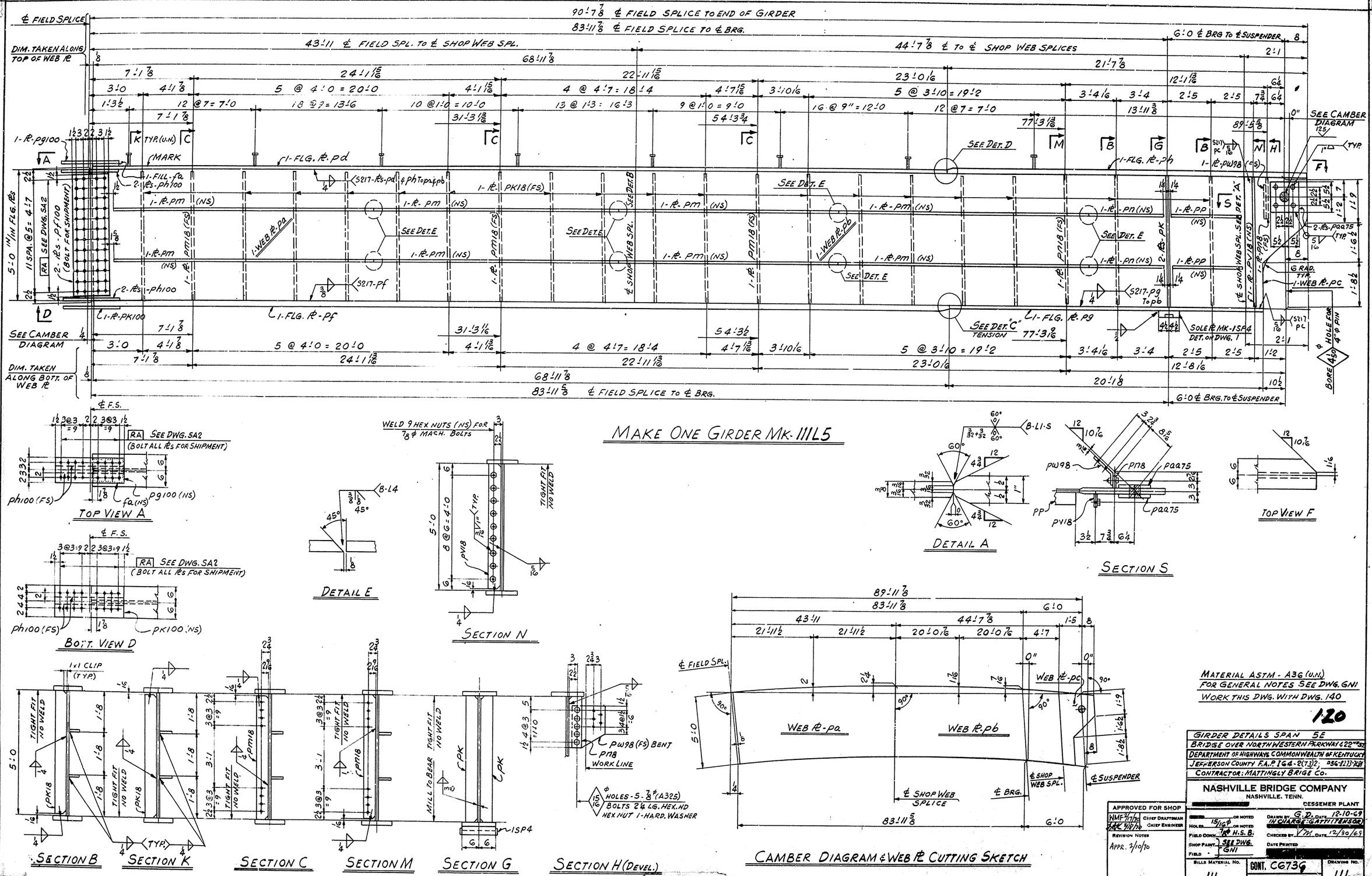

MAKE ONE GIRDER MK-111L5

MATERIAL ASTM - A36 (U.N.)
FOR GENERAL NOTES SEE DWG. GN1
WORK THIS DWG. WITH DWG. 140

120

GIRDER DETAILS SPAN 5E
BRIDGE OVER NORTH WESTERN PARKWAY & 22ND ST.
DEPARTMENT OF HIGHWAYS, COMMONWEALTH OF KENTUCKY
JEFFERSON COUNTY F.A.P. IG4-2(73)2; 056-4213-7481
CONTRACTOR: MATTINGLY BRIDGE CO.

NASHVILLE BRIDGE COMPANY
NASHVILLE, TENN.
CESSEMER PLANT

APPROVED FOR SHOP	
WMF 7/17/70	CHIEF DRAFTSMAN
JHK 7/18/70	CHIEF ENGINEER
REVISION NOTES	
APPR. 4/10/70	

DRAWN BY G.D.	DATE 12-10-69
IN CHARGE: GATTI TENSOR	
HOLES 15/16 ϕ OR NOTED	
FIELD CONN. 7/8 ϕ H.S.B. OR NOTED	CHECKED BY VM DATE 12/30/69
SHOP PAINT SEE DWG. GN1	DATE PRINTED
FIELD	

BILLS MATERIAL NO.	CONT. C673G	DRAWING NO.
111	S.O. B5725	111

B-K ELLIOTT CO., PGH., PA. RECORDER R-4573

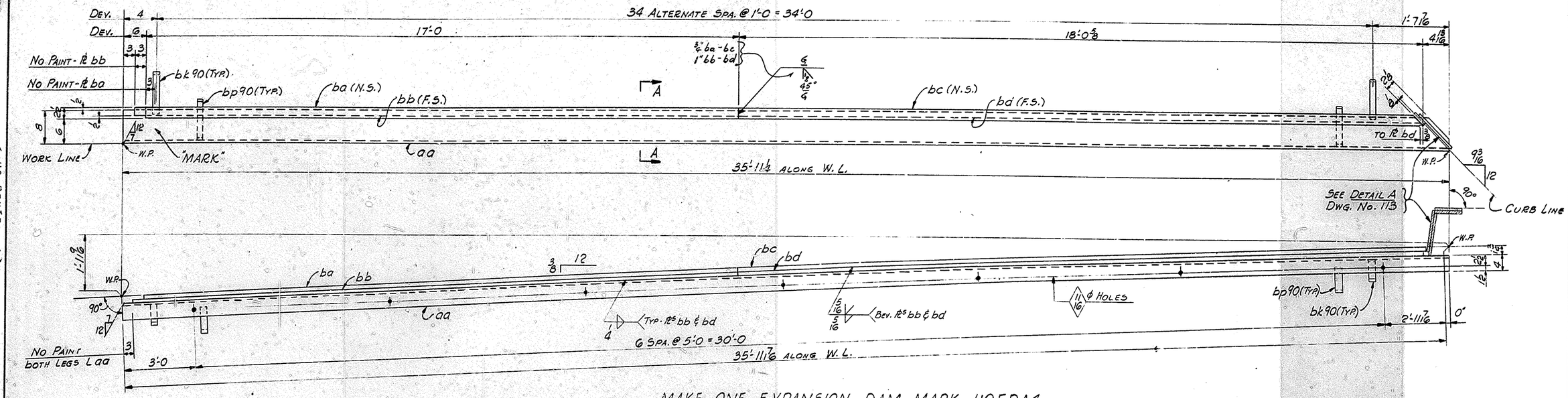

MAKE ONE EXPANSION DAM MARK 112EDA4

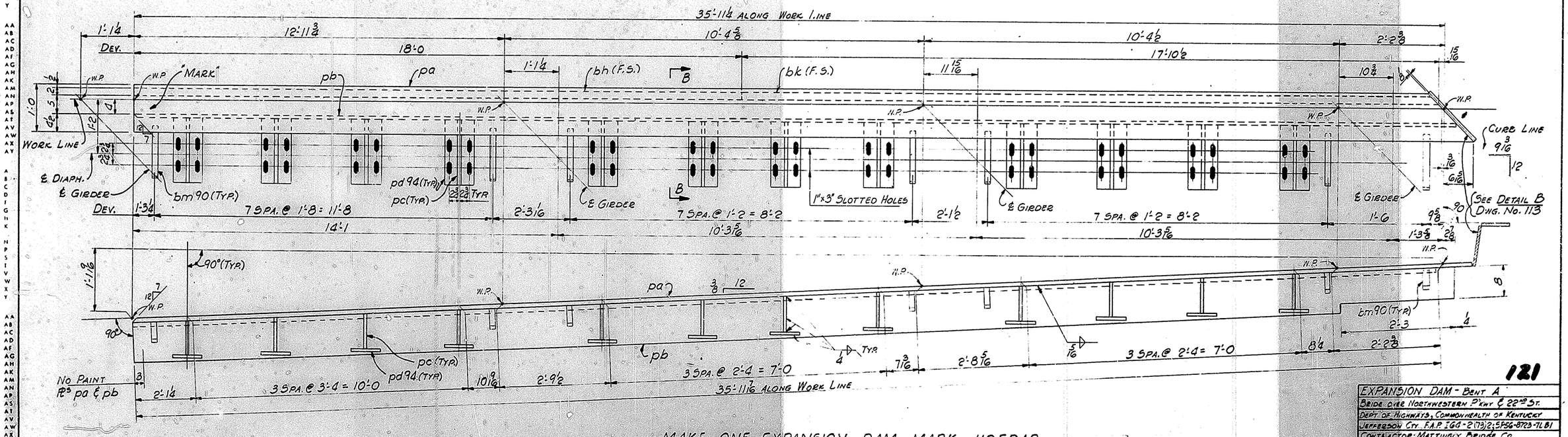

MAKE ONE EXPANSION DAM MARK 112EDA8

NOTES:
ALL MATERIAL ASTM A36.
FOR GENERAL NOTES SEE DWG. GN1.
EXPANSION DAMS ARE TO BE ASSEMBLED IN THE SHOP IN THEIR RELATIVE FINAL POSITION AND INSPECTED FOR FIT.
WORK THIS DWG. WITH DWG. 113

121

EXPANSION DAM - BENT A
BRIDGE OVER NORTHWESTERN P'KWY & 22ND ST.
DEPT. OF HIGHWAYS, COMMONWEALTH OF KENTUCKY
JEFFERSON CTY. F.A.P. IGG-2(73)2; SPR6-8723-7L B1
CONTRACTOR: MATTINGLY BRIDGE CO

NASHVILLE BRIDGE COMPANY
NASHVILLE, TENN.
BESSEMER PLANT

APPROVED FOR SHOP
CHIEF DRAFTSMAN
CHIEF ENGINEER
REVISION NOTE: APPR. 9/6/70

DRAWN BY J.B. DATE 12-8-69
IN CHARGE GATTI (TENADE)
CHECKED BY VM DATE 1/23/70
DATE PRINTED
HOLES A3 NOTED
FIELD CONN. 3/8
SHOP PAINT } SEE GN1
FIELD

BILLS MATERIAL No. 112
CONT. C6736
S.O. B-5728
DRAWING No. 112

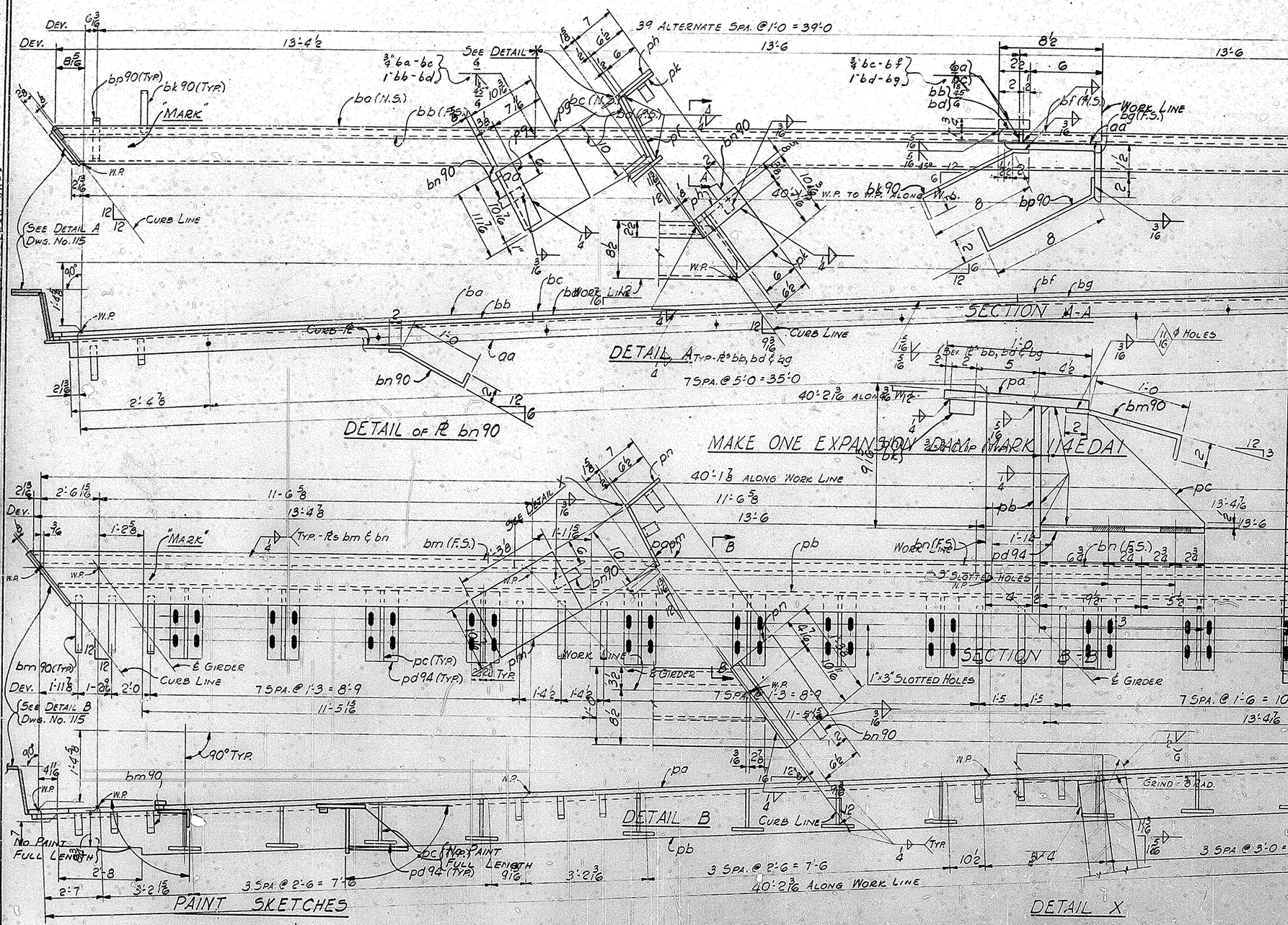

NASHVILLE BRIDGE COMPANY

SHOP ORDER NO. B-5728
WORK ORDER NO.
CONTRACT NO. C 6736

COMMONWEALTH OF KENTUCKY, DEPT OF HIGHWAYS, BRIDGE OVER NORTHWESTERN PKWY & 22nd ST. JEFFERSON COUNTY

FABRICATION — SHOP — PLANT

BILL NO. 112
DRAWING NO. 112 & 113

SHIP	SHIPPING MARK	ITEM QUANT	ASSEMBLY MARK	SHAPE	SECTION	FINISHED LENGTH FT. IN.	ORDERED WEIGHT	SPECIAL WORK	PAINT NO.	PAINT	SPECIF WEIGHT	A.S.B.C. WEIGHT
					MAT. ASTM A36				NO PAINT			
One	112EDA4				EXPANSION DAM							
		One	aa	L	8x4x1/2	35 11						
		One	bf	PL	10 1/2x1/2	5 11						
		One	pg	PL	3 1/2x1/2	0 10 1/2						
		One	pn	PL	3 1/2x1/2	0 2 1/2						
		One	pk	PL	6x1/2	0 10 3/16						
		One	ba	3/8	2 1/2x3/8	17 0						
		One	bb	3/8	2x1	17 3						
		One	bc	3/8	2 1/2x3/8	18 0 1/2						
		One	bd	3/8	2x1	18 0 1/2						
		18	bk90	3/8	1 1/2x3/8	1 0						
		17	bp90	3/8	1 1/2x3/8	1 0						
		2	bn90	3/8	1 1/2x3/8	1 4						
One	112EDA3				EXPANSION DAM							
		12	bp90	PL	1 1/2x3/8	1 0						
		One	pb	PL	10x1/2	36 2 1/2						
		12	pc	PL	6 3/8x3/8	1 6 3/8						
		12	pd94	PL	9x3/8	1 9						
		One	pm	PL	10 1/2x1/2	1 3 1/2						
		One	pn	PL	6 1/2x1/2	1 3 1/2						
		One	bh	3/8	2x1	18 0						
		One	bk	3/8	2x1	17 10 1/2						
		25	bm90	3/8	1 1/2x3/8	1 4						
		2	bn90	3/8	1 1/2x3/8	1 4						

NOTES:
ALL MATERIA ASTM A36.
FOR GENERAL NOTES SEE DWG. GN1.
EXPANSION DAMS ARE TO BE ASSEMBLED IN THE SHOP IN THEIR RELATIVE FINAL POSITION AND INSPECTED FOR FIT.
WORK THIS DWG. WITH DWG. 115.

MAKE ONE EXPANSION DAM MARK 1:4EDA5
ALL MATERIAL ASTM A36.
FOR GENERAL NOTES SEE DWG GN1.
WORK THIS DWG. WITH DWG. 112.

EXPANSION DAM - PART A
BRIDGE OVER NORTHWESTERN PKWY & 22nd ST.
OFFICE OF HIGHWAYS - COMMONWEALTH OF KENTUCKY
NASHVILLE BRIDGE COMPANY
NASHVILLE, TENN.

APPR. 3/3/70

BILL OF MATERIAL NO. 1184
CONTRACT C 6736
DRAWING 1134

BRIDGE

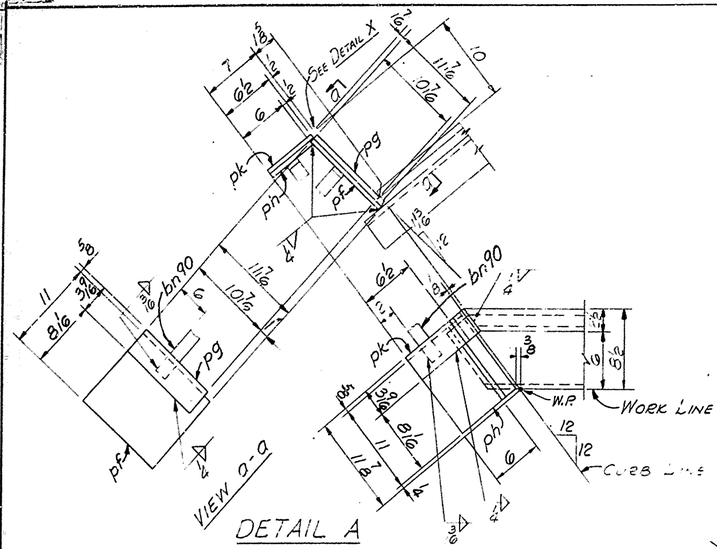

DETAIL A

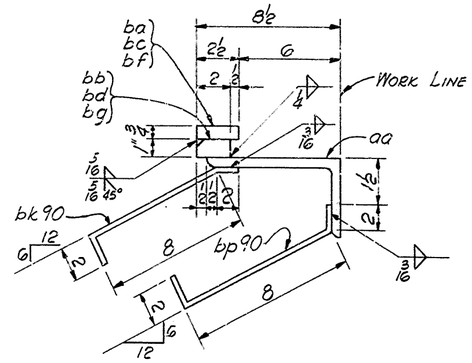

SECTION A-A

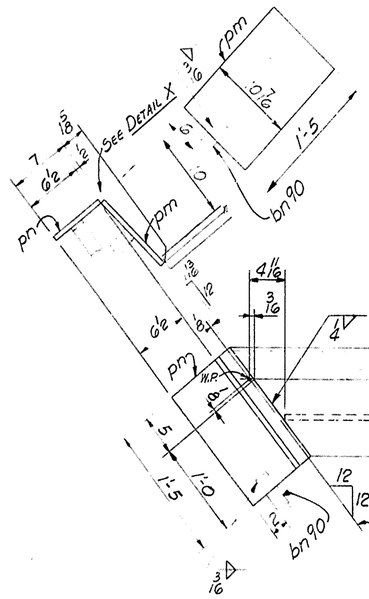

DETAIL B

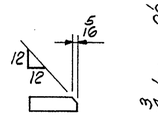

SECT. w
(For PL pw only)

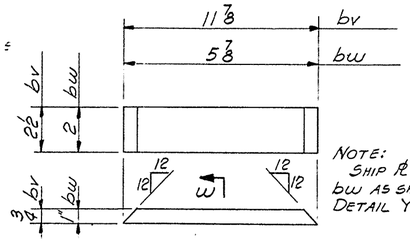

NOTE:
Ship PLs bv & bw as shown on Detail Y

DETAIL OF PLs bv & bw

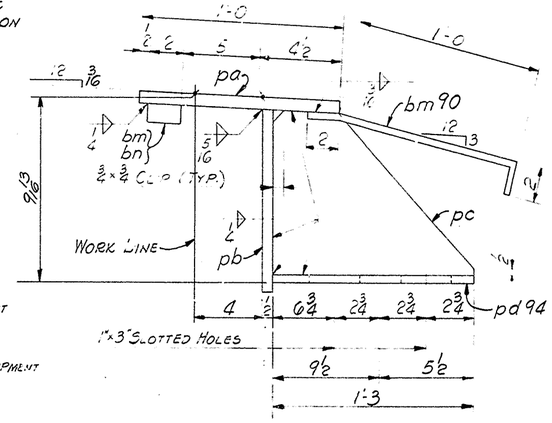

SECTION B-B

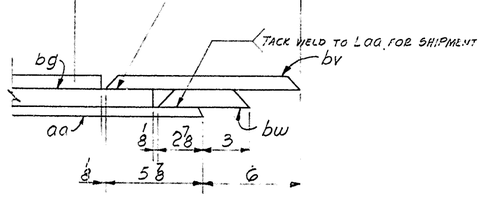

DETAIL Y

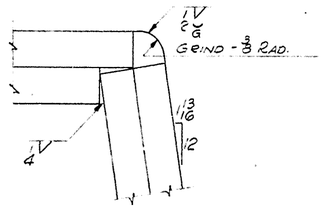

DETAIL X

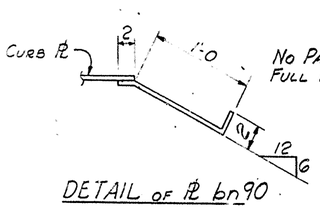

DETAIL OF PL bn90

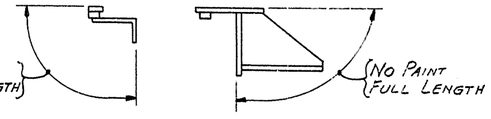

PAINT SKETCHES

NOTES:
All material ASTM A36.
For General Notes see Dwg. G.N.
Work this Dwg with Dwg. 114.

NASHVILLE BRIDGE COMPANY

Shop Order No. B-5728 — Commonwealth of Kentucky, Dept. of Highways, Bridge over Northwestern Pkwy & 22nd St. Jefferson County — Bill No. 114 — Drawing No. 114 & 115

Work Order No. — Contract No. C G736 — Fabrication Bessemer Plant

Item — Weights by — Checked by

Ship	Shipping Mark	Item Count	Assembly Mark	Sym	Section	Finished Length	Notched Length	Pcs	Type	Remarks	Spec Revision	AISC Weight
					MAT ASTM A36							
One	114 EDA1				Expansion Dam							
		One	aa	L	8x4x1/2	40 11 3/8						19/30
		One	pf	PL	11x1/2	0 11 1/16						23/4
		One	pg	PL	3 9/16x1/2	0 10 7/16						23/3
		One	ph	PL	6x1/2	0 11						23/7
		One	pk	PL	3 9/16x1/2	0 6 1/2						23/16
		One	ba	Bar	2 1/2x3/4	13 6 1/2						19/32
		One	bb	Bar	2x1	13 4 1/16						19/8
		One	bc	Bar	2 1/2x3/4	13 5 3/4						19/36
		One	bd	Bar	2x1	13 5 3/4						19/8
		One	bf	Bar	2 1/2x3/4	13 6						19/36
		One	bg	Bar	2x1	13 9						19/8
		20	bp90	Bar	1 1/2x3/8	1 0						19/64
		20	bk90	Bar	1 1/2x3/8	1 0						19/64
		2	bn90	Bar	1 1/2x3/8	1 4						19/55
		One	bv	Bar	2 1/2x3/4	0 11 1/8						19/64
		One	bw	Bar	2x1	0 5 1/8						19/13
One	114 EDA5				Expansion Dam							
		One	pa	PL	12x3/4	40 4 1/8	17 3/4		cuts & cer.	3910	313	3/8
		One	pb	PL	10x1/2	39 9 3/8				3910	401	19/32
		12	pc	PL	8 5/8x3/8	1 3				3909	411	19/64
		12	pd94	PL	8x3/8	1 3		82	cuts in PL	3909	413	19/64
		One	pm	PL	10 7/16x1/2	1 5				3680	404	23/16
		One	pn	PL	6 1/2x1/2	1 5				3680	404	23/16
		One	bm	Bar	2x1	13 4 7/8				3913	603	19/8
		2	bn	Bar	2x1	13 6				3913	603	19/8
		28	bm90	Bar	1 1/2x3/8	1 4				3686	606	19/55
		2	bn90	Bar	1 1/2x3/8	1 4				3686	606	19/55

Sheet total

124

EXPANSION DAM — Bent A
Bridge over Northwestern Pkwy & 22nd St.
Dept. of Highways, Commonwealth of Kentucky
Jefferson Cty. F.A.P. IGC-2,7,9)2,5)56-8273-7181
Contractor: Wattingly Bridge Co.

NASHVILLE BRIDGE COMPANY
Nashville, Tenn.
Bessemer Plant

Approved for Shop: NMF 7/6/70 Chief Draftsman; JAC 7/6/70 Chief Engineer
Revision Notes

Holes 42 Notes
Field Conn.
Shop Paint } See G.N.
Field

Drawn by J.B. Date 12-11-69
Checked by JM Date 1/22/70
Date Printed

Bills Material No. 114 — Cont. C G736 — S.O. B-5728 — Drawing No. 115

B. K. Elliott Co. Pgh. Pa. Reorder # 8378

BRIDGE

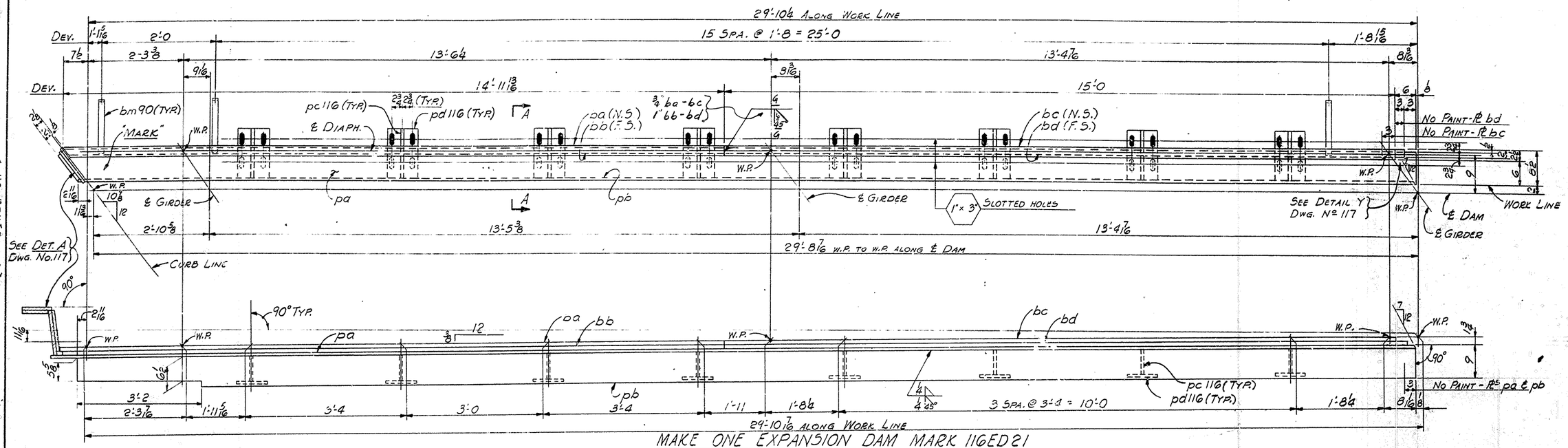

MAKE ONE EXPANSION DAM MARK 116ED21

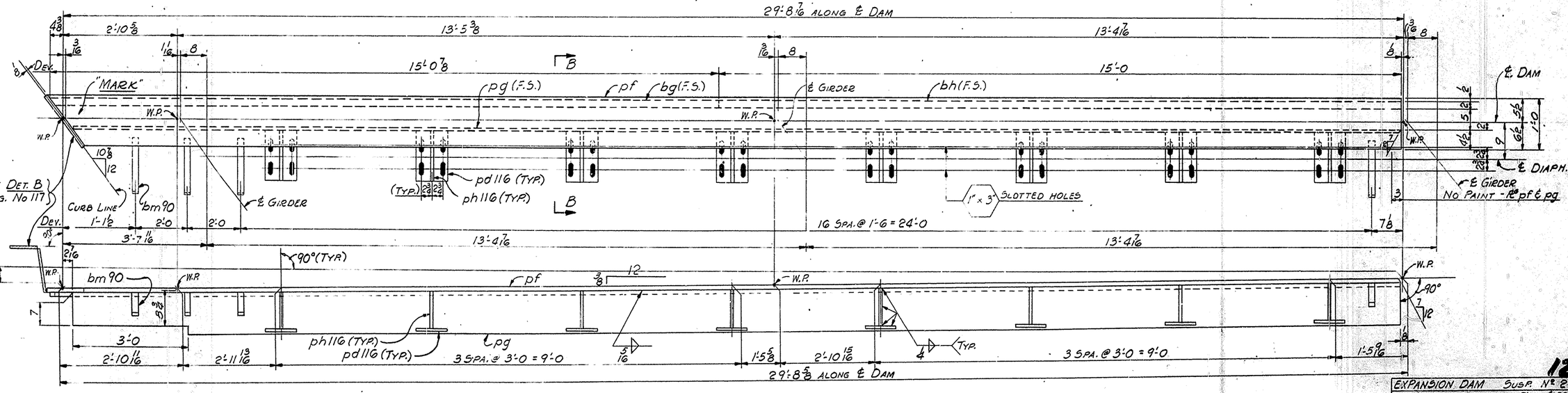

MAKE ONE EXPANSION DAM MARK 116ED25

NOTES:
ALL MATERIAL ASTM A36.
FOR GENERAL NOTES SEE DWG. No. GN1.
EXPANSION DAMS ARE TO BE ASSEMBLED IN THE SHOP IN THEIR RELATIVE FINAL POSITION AND INSPECTED FOR FIT.
WORK THIS DWG. WITH DWG. No. 117.

125

EXPANSION DAM SUBP. Nº 2
BRIDGE OVER NORTHWESTERN P'WAY & 22ND ST.
DEPT. OF HIGHWAYS, COMMONWEALTH OF KENTUCKY
JEFFERSON CTY., F.A.P. IGS-2(73)2; SP5L-P273-7L81
CONTRACTOR: MATTINGLY BRIDGE CO.

NASHVILLE BRIDGE COMPANY
NASHVILLE, TENN.
BESSEMER PLANT

APPROVED FOR SHOP
CHIEF DRAFTSMAN
CHIEF ENGINEER
REVISION NOTES
APPR. 3/6/70

DRAWN BY J.B. DATE 12-15-69
IN CHARGE L. GATTI (TENSOR)
CHECKED BY VM DATE 1/23/70
DATE PRINTED
HOLES As NOTED
FIELD CONN. 39
SHOP PAINT } SEE GN1
FIELD
BILL OF MATERIAL No. 116
CONT. C6736
S.O. B-5728
DRAWING No. 116

BRIDGE

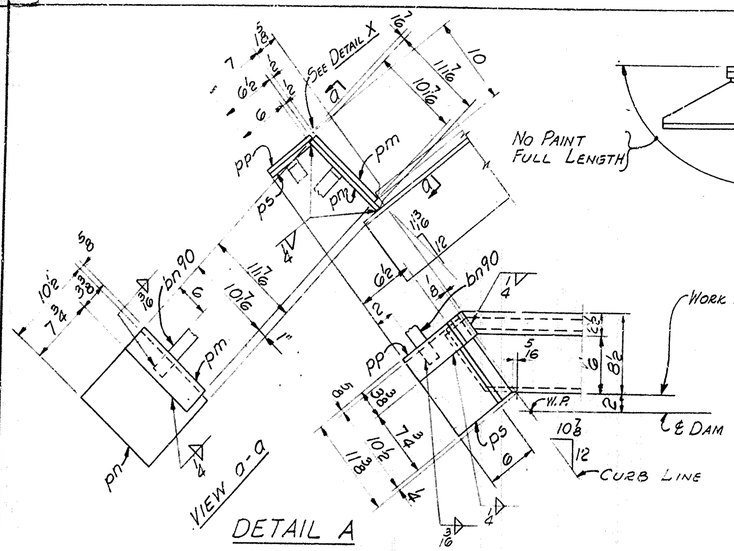

DETAIL A

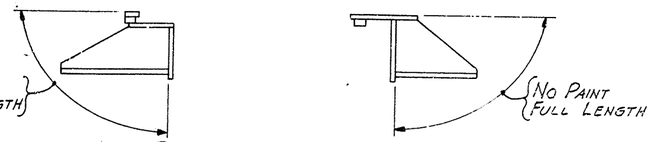

PAINT SKETCHES

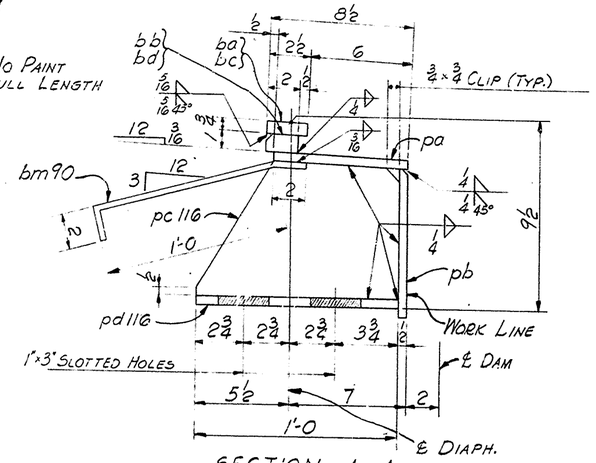

SECTION A-A

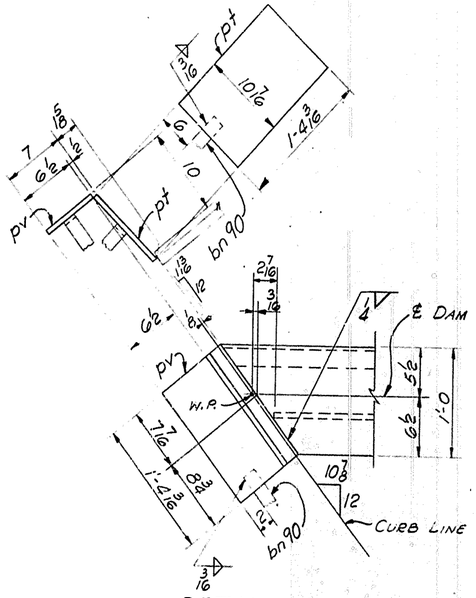

DETAIL B

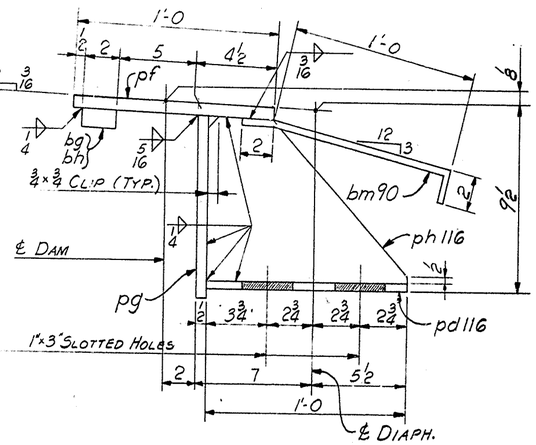

SECTION B-B

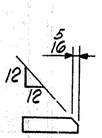

SECT. w
(FOR PL bw ONLY)

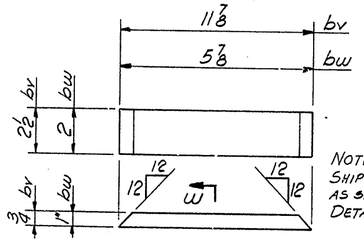

NOTE:
SHIP PLs bv & bw
AS SHOWN ON
DETAIL Y.

DETAIL OF PLs bv & bw

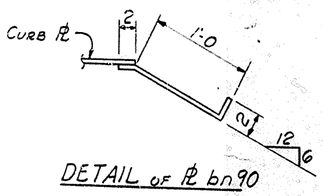

DETAIL OF PL bn90

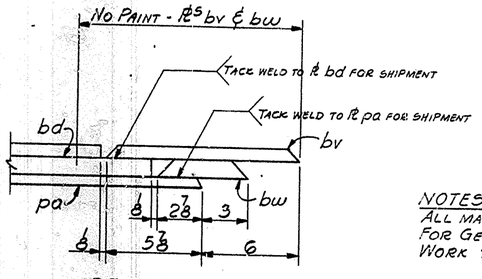

DETAIL Y

NOTES:
ALL MATERIAL ASTM A36.
FOR GENERAL NOTES SEE DWG. GN1.
WORK THIS DWG. WITH DWG. 116

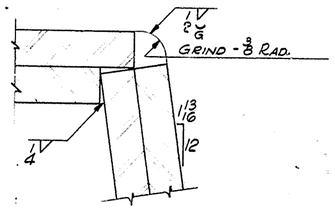

DETAIL X

NASHVILLE BRIDGE COMPANY

SHOP ORDER NO. B-5728
WORK ORDER NO.
CONTRACT NO. C6736
BILL NO. 116
DRAWING NO. 116 & 117

COMMONWEALTH OF KENTUCKY, DEPT. OF HIGHWAYS, BRIDGE OVER NORTHWESTERN PKWY & 22ND ST. JEFFERSON COUNTY

FABRICATION BESSEMER PLANT #

ITEM SHIP	ITEM SHIPPING MARK	ITEM QUANT.	ASSEMBLY MARK	SHAPE	SECTION	FINISHED LENGTH FT. IN.	ORDERED LENGTH FT. IN.			WEIGHTS BY P.O. NO.	ITEM NO.	CHECKED BY REMARKS	SPECIF. WEIGHT	AISC WEIGHT
					MAT. ASTM A36									
ONE	116ED21				EXPANSION DAM									
		ONE	pa	PL	8 × 1/2	30 6 1/16				3909	403			
		ONE	pb	PL	8 1/2 × 1/2	30 1				3909	403			
		8	pc 116	PL	6 3/4 × 3/8	1 0		8E CUTS	0E8	3909	411			
		8	pd 116	PL	8 × 3/8	1 0		8E CUTS	0E8	3909	413			
		ONE	pm	PL	3 3/8 × 1/2	0 10 7/16				STK 3680	404			
		ONE	pn	PL	10 1/2 × 1/2	0 11/16					404			
		ONE	pp	PL	3 3/8 × 1/2	0 6 3/8					404			
		ONE	ps	PL	6 × 1/2	0 10 1/2					404			
		ONE	ba	8WF 31	2 1/2 × 3/4	14 11 1/16				3913	404			
		ONE	bb	8WF 31	2 × 1	14 11 1/16				3913	403			
		ONE	bc	8WF 31	2 1/2 × 3/4	15 0				3913	404			
		ONE	bd	8WF 31	2 × 1	15 3				3913	403			
		18	bm90	8WF 31	1 1/2 × 3/8	1 4				STK 6806	406	BENT		
		2	bn90	8WF 31	1 1/2 × 3/8	1 4				STK 6806	406	BENT		
		ONE	bv	8WF 31	2 1/2 × 3/4	2 1/8				3913	404			
		ONE	bw	8WF 31	2 × 1	2 3 1/8				3913	403			
ONE	116ED25				EXPANSION DAM									
		ONE	pf	PL	12 × 3/4	30 1 5/16	8E CUTS	0E13	7E18	3910	318			
		ONE	pg	PL	10 × 1/2	29 6 1/16				STK 3774	407			
		8	ph 116	PL	8 × 3/8	1 0	8E CUTS	0E8		3909	413			
		8	pj 116	PL	8 3/4 × 3/8	1 0				3909	411			
		ONE	pt	PL	10 1/2 × 1/2	1 4 1/16				STK 3680	404			
		ONE	pv	PL	6 1/2 × 1/2	1 4 3/8				STK 3680	404			
		19	bm90	8WF 31	1 1/2 × 3/8	1 4				STK 6806	406	BENT		
		ONE	bg	8WF 31	2 × 1	15 0 3/8				3913	403			
		ONE	bh	8WF 31	2 × 1	15 0				3913	403			
		2	bn90	8WF 31	1 1/2 × 3/8	1 4				STK 6806	406	BENT		

SHEET TOTAL

126

EXPANSION DAM - SUSP. Nº 2
BRIDGE OVER NORTHWESTERN PKWY & 22ND ST.
DEPT. OF HIGHWAYS, COMMONWEALTH OF KENTUCKY
JEFFERSON CTY. F.A.P. IGG-2(73)2; SP56-8273-7L81
CONTRACTOR: MATTINGLY BRIDGE CO.

NASHVILLE BRIDGE COMPANY
NASHVILLE, TENN.
BESSEMER PLANT

APPROVED FOR SHOP
NMF 7/10 CHIEF DRAFTSMAN
JAC 8/20 CHIEF ENGINEER
REVISION NOTES

HOLES AS NOTED
FIELD CONN. SEE GN1
SHOP PAINT
FIELD
DRAWN BY J.B. DATE 12-15-67
CHECKED BY V.M. DATE 1/22/70
DATE SENT

BILL MATERIAL NO. 116
CONT. C6736
S.O. B-5728
DRAWING NO. 117

BRIDGE

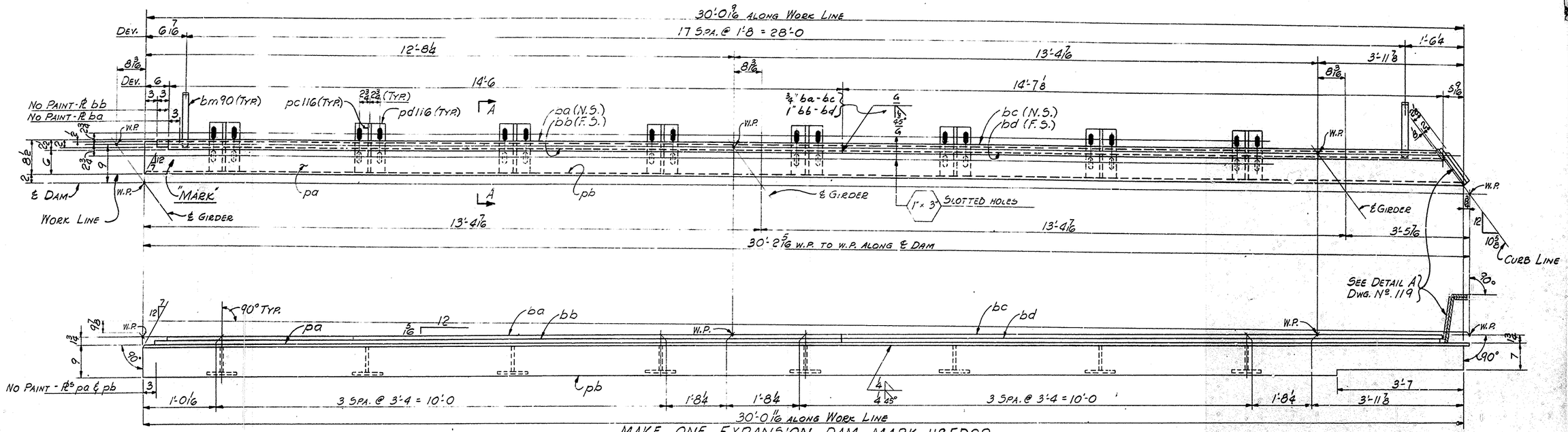

MAKE ONE EXPANSION DAM MARK 118ED22

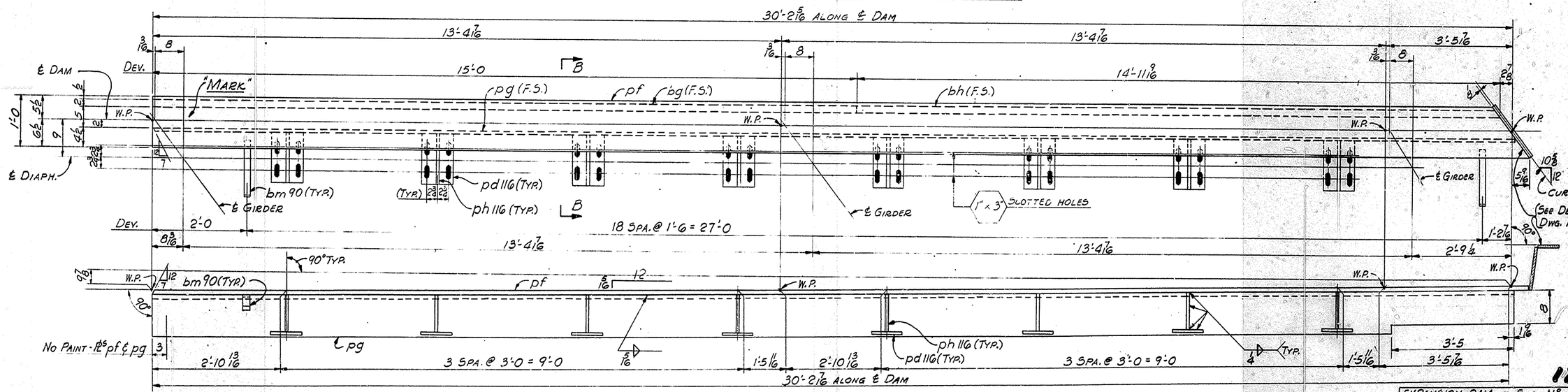

MAKE ONE EXPANSION DAM MARK 118ED26

NOTES:
ALL MATERIAL ASTM A36.
FOR GENERAL NOTES SEE DWG. No. GN1.
EXPANSION DAMS ARE TO BE ASSEMBLED IN THE SHOP IN THEIR RELATIVE FINAL POSITION AND INSPECTED FOR FIT.
WORK THIS DWG. WITH DWG. No. 119.

127

EXPANSION DAM - SUB. No 2
BRIDGE OVER NORTHWESTERN PWAY & 22ND ST.
DEPT. OF HIGHWAYS, COMMONWEALTH OF KENTUCKY
JEFFERSON CTY.; F.A.P. IG4-2(73)2; SPSG-8273-7681
CONTRACTOR: MATTINGLY BRIDGE CO.

NASHVILLE BRIDGE COMPANY
NASHVILLE, TENN.
BESSEMER PLANT

APPROVED FOR SHOP
NMF 3/6/70 — CHIEF DRAFTSMAN
HC 3/6/70 — CHIEF ENGINEER
REVISION NOTES: APPR. 3/6/70

HOLES: As NOTED
FIELD CONN.: 3/8
SHOP PAINT: SEE G.N.
FIELD:

DRAWN BY: J.B. DATE: 12-17-69
IN CHARGE: GATTI (TENSION)
CHECKED BY: JM DATE: 1/23/70
DATE PRINTED:

BILLS MATERIAL No. 118
CONT. C6736
S.O. B-5728
DRAWING No. 118

BRIDGE

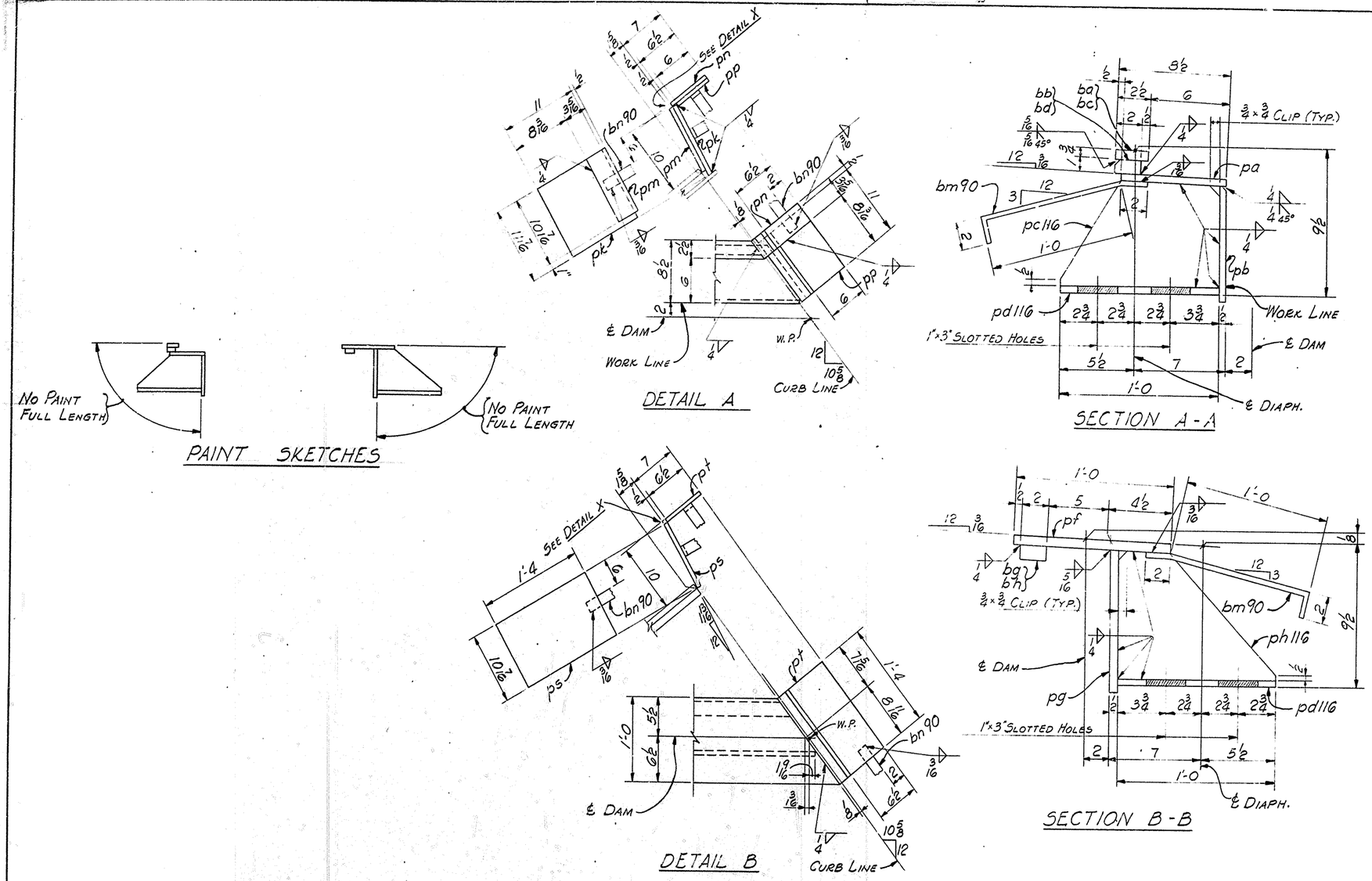

NOTES:
ALL MATERIAL ASTM A36.
FOR GENERAL NOTES SEE DWG. GN1.
WORK THIS DWG. WITH DWG. 118.

NASHVILLE BRIDGE COMPANY

SHOP ORDER NO. B-5728
WORK ORDER NO.
CONTRACT NO. CG736
COMMONWEALTH OF KENTUCKY, DEPT. OF HIGHWAYS, BRIDGE OVER NORTHWESTERN PKWY & 22ND ST. JEFFERSON COUNTY
FABRICATION BESSEMER PLANT
BILL NO. 118
DRAWING NO. 118 & 119

SHIP	SH MARK	ITEM COUNT	ASSEMBLY MARK	SECTION	FINISHED LENGTH FT IN	ORDERED LENGTH FT IN	P.O. NO.	ITEM NO.	REMARKS	SPECIF. WEIGHT	ASTM WEIGHT
				MAT. ASTM A36							
ONE	118ED22			EXPANSION DAM							
		ONE	pa	PL 8 x 1/2	30 2 3/16		3909	403			1 3/16
		ONE	pb	PL 8 1/2 x 1/2	30 0 11/16		3909	403			1 3/16
		8	116	PL 6 1/2 x 3/8	1 0		3909	411			1 7/17
		8	116	PL 8 x 3/8	1 0	8 @ CUTS 1 @ 8	3909	413			1 9/16
		ONE	pk	PL 11 x 1/2	0 11 7/16		STK 3600	444			2 5/16
		ONE	pm	PL 3 7/16 x 1/2	0 11 7/16			444			2 5/16
		ONE	pn	PL 3 7/16 x 1/2	0 6 1/2			444			2 5/16
		ONE	pp	PL 6 x 1/2	0 11			444			2 5/7
		ONE	ba	PL 2 1/2 x 3/4	14 6		3913	603			1 3/4
		ONE	bb	PL 3/8 2 x 1	14 9			603			1 3/3
		ONE	bc	PL 3/8 2 1/2 x 3/4	14 7			603			1 3/4
		ONE	bd	PL 3/8 2 x 1	14 6 3/16			603			1 3/3
		18	bm90	PL 3/8 1 1/2 x 3/8	1 4		STK 686	446	BENT		1 3/10
		2	bn90	PL 3/8 1 1/2 x 3/8	1 4		STK 686	446	BENT		1 3/10
ONE	118ED26			EXPANSION DAM							
		ONE	pf	PL 12 x 3/4	30 8	8 @ 5 1/2 CUTS 1 @ 12	3910	312			1 3/9
		ONE	pg	PL 10 x 1/2	30 4		STK 3774	407			1 3/10
		8	116	PL 8 x 3/8	1 0	8 @ CUTS 1 @ 8	3909	413			1 9/16
		8	116	PL 8 3/8 x 3/8	1 0		3909	411			1 7/17
		ONE	ps	PL 10 7/16 x 1/2	1 4		STK 3600	444			2 5/6
		ONE	pt	PL 6 1/2 x 1/2	1 4		STK 3600	444			2 5/5
		ONE	bg	PL 3/8 2 x 1	15 0		3913	603			1 3/3
		ONE	bh	PL 3/8 2 x 1	14 11 3/16		3913	603			1 3/3
		19	bm90	PL 3/8 1 1/2 x 3/8	1 4		STK 686	446	BENT		1 3/10
		2	bn90	PL 3/8 1 1/2 x 3/8	1 4		STK 686	446	BENT		1 3/10

SHEET TOTAL

128

EXPANSION DAM - SUS. Nº 2
BRIDGE OVER NORTHWESTERN PKWY & 22ND ST.
DEPT. OF HIGHWAYS, COMMONWEALTH OF KENTUCKY
JEFFERSON CTY. F.A.P. IG4-2(73)2; SP56-273 7281
CONTRACTOR: MATTINGLY BRIDGE CO.

NASHVILLE BRIDGE COMPANY
NASHVILLE, TENN.
BESSEMER PLANT

APPROVED FOR SHOP
WME 9/6/70 CHIEF DRAFTSMAN
CHIEF ENGINEER
REVISION NOTES

HOLES AS NOTED
FIELD CONN. } SEE GN1
SHOP PAINT } SEE GN1
FIELD

DRAWN BY J.B. DATE 12-17-69
CHECKED BY J.M. DATE 1/23/70
DATE PRINTED

BILL OF MATERIAL NO. 118
S.O. & CG736
S.O. B-5728
DRAWING NO. 119

BRIDGE

AD AF AG AH AK AM AN AP AS AT AV AW AX AY

P. K. ELLIOTT CO., PIN. PA. REORDER A-8373

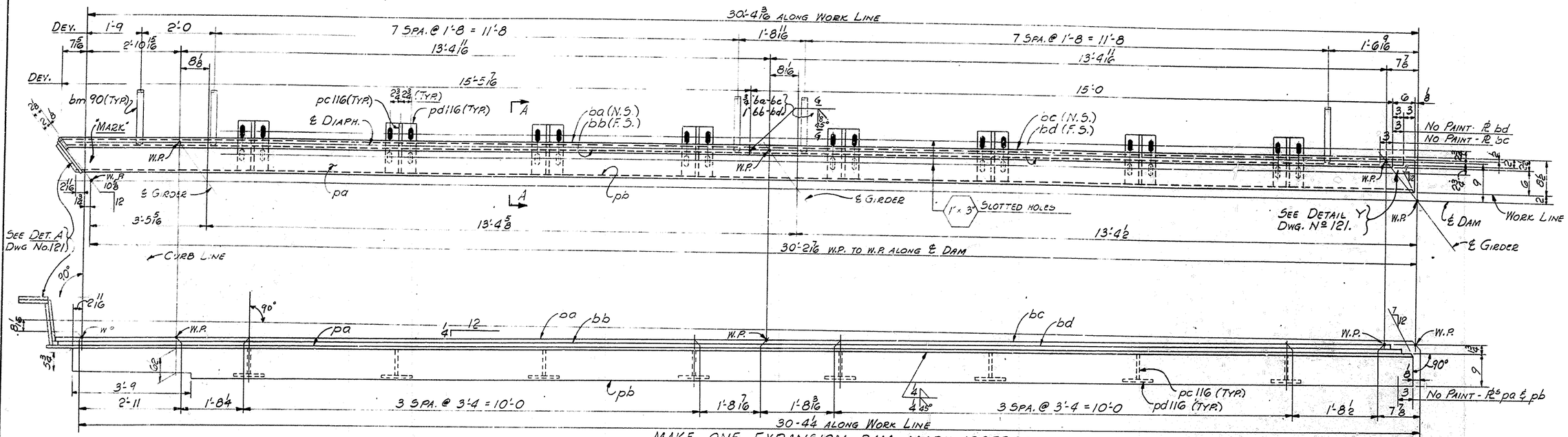

MAKE ONE EXPANSION DAM MARK 120ED23

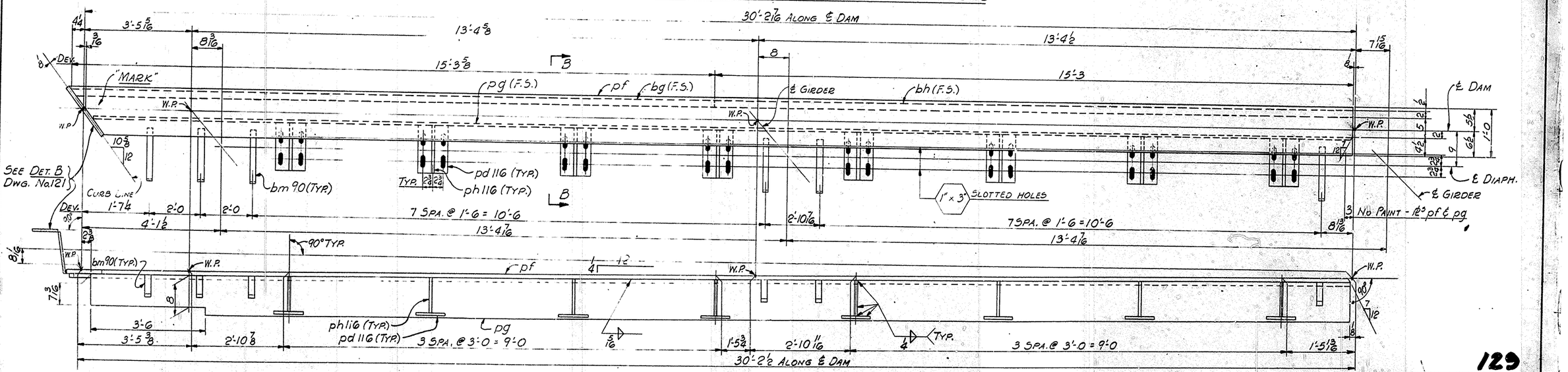

MAKE ONE EXPANSION DAM MARK 120ED27

NOTES:
ALL MATERIAL ASTM A36.
FOR GENERAL NOTES SEE DWG. No. GN1.
EXPANSION DAMS ARE TO BE ASSEMBLED IN THE SHOP
IN THEIR RELATIVE FINAL POSITION AND INSPECTED FOR FIT.
WORK THIS DWG. WITH DWG. No. 121.

129

EXPANSION DAM - SUSP. No 2
BRIDGE OVER NORTHWESTERN PWAY & 22ND ST.
DEPT. OF HIGHWAYS, COMMONWEALTH OF KENTUCKY
JEFFERSON CTY., F.A.P. SGA-2(73)2; SP-3(P273-7LB1
CONTRACTOR: MATTINGLY BRIDGE CO.

NASHVILLE BRIDGE COMPANY
NASHVILLE, TENN.
BESSEMER PLANT

APPROVED FOR SHOP
CHIEF DRAFTSMAN
CHIEF ENGINEER
REVISION NOTED
APPR. 3/5/70

HOLES 13 NOTES
FIELD CONN. 3/8
SHOP PAINT } SEE GN1
FIELD

DRAWN BY W.L.P. DATE 12-16-69
IN CHARGE: GATTI (12-16-69)
CHECKED BY VM DATE 1/23/70
DATE PRINTED

BILLS MATERIAL No. 120
CONT. C6736
S. O. B-5728
DRAWING No. 120

B. K. ELLIOTT CO. PGH. PA REORDER A-8373

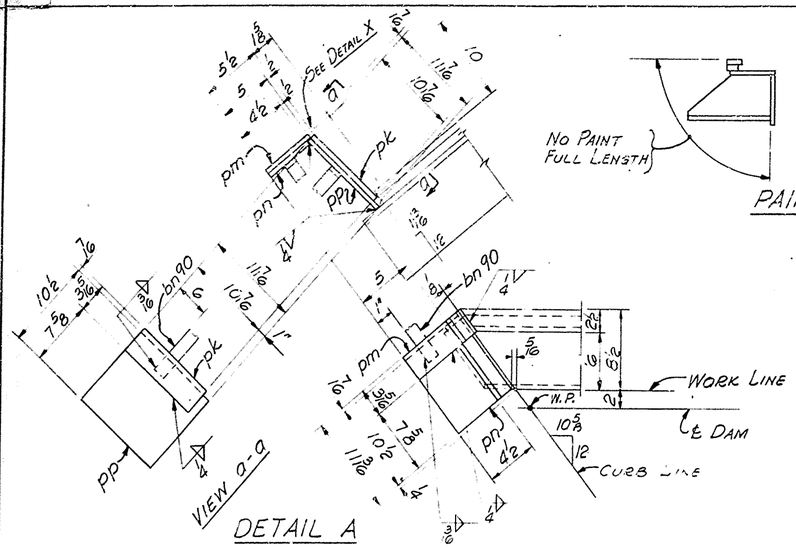

DETAIL A

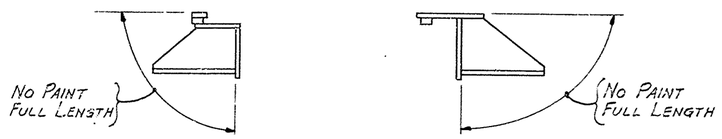

PAINT SKETCHES

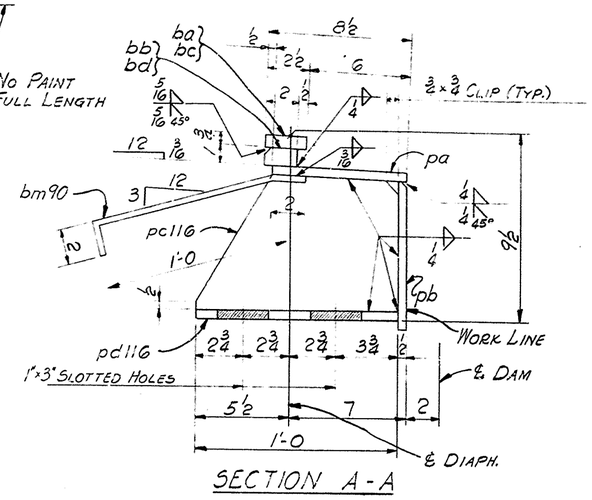

SECTION A-A

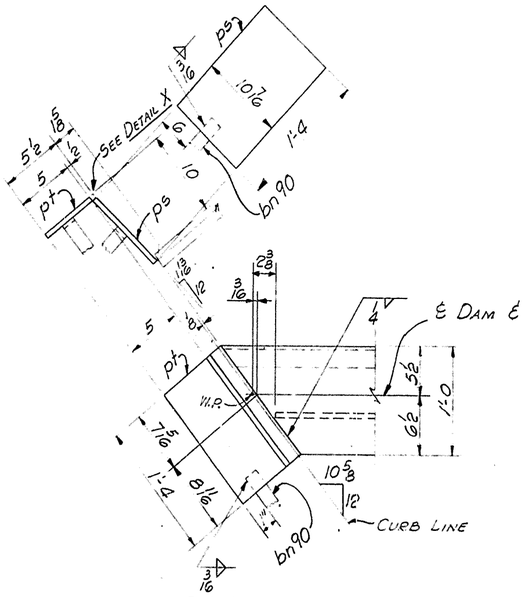

DETAIL B

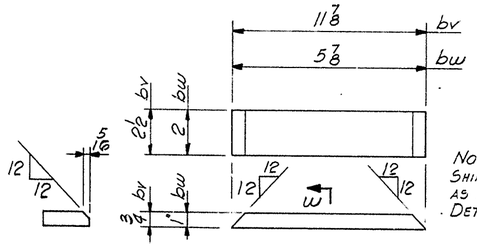

SECT. w
FOR PL bw ONLY

DETAIL OF PLS bv & bw

NOTE:
SHIP PLS bv & bw AS SHOWN ON DETAIL Y.

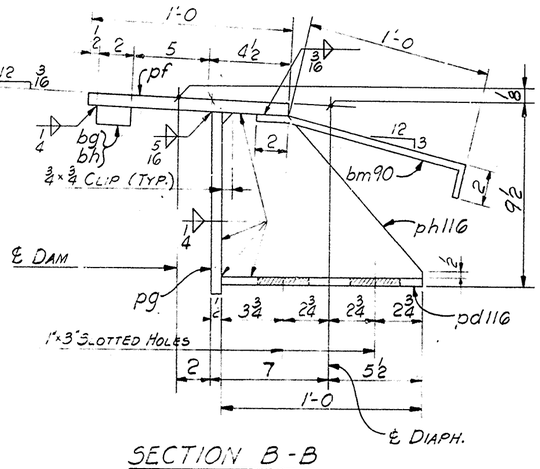

SECTION B-B

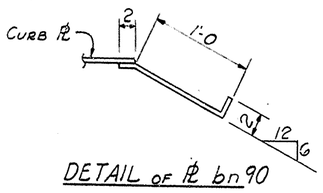

DETAIL OF PL bn90

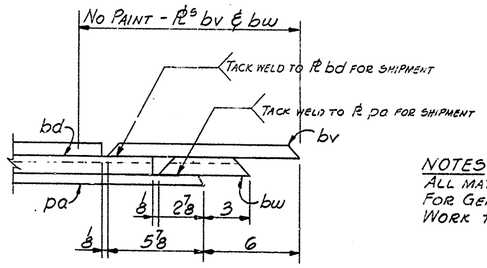

DETAIL Y

NOTES:
ALL MATERIAL ASTM A36.
FOR GENERAL NOTES SEE DWG. GN1.
WORK THIS DWG. WITH DWG. 120

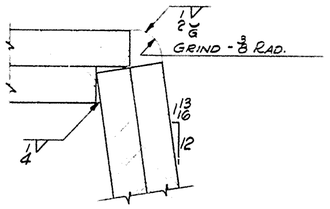

DETAIL X

NASHVILLE BRIDGE COMPANY

SHOP ORDER NO. B-5728
WORK ORDER NO.
CONTRACT NO. CG736
COMMONWEALTH OF KENTUCKY, DEPT. OF HIGHWAYS, BRIDGE OVER NORTHWESTERN PKWY & 22ND ST. JEFFERSON COUNTY
FABRICATION BESSEMER PLANT
BILL NO. 120
DRAWING NO. 120 & 121
WEIGHTS BY
CHECKED BY

SHIP	SHIPPING MARK	ITEM QUANT	ASSEMBLY MARK	REV	SECTION	FINISHED LENGTH FT IN	ORDERED LENGTH FT IN		P.O. NO	ITEM NO	REMARKS	SHEET WEIGHT	BYSC WEIGHT
					MAT. ASTM A36								
ONE	120ED23				EXPANSION DAM								
		ONE	pa	PL	8 x 1/2	31 0 1/16			3909	403			1/12
		ONE	pb	PL	8 1/2 x 1/2	30 0 13/16				403			1/11
		8	pc 1/16	PL	6 1/2 x 3/8	1 0				411			1/17
		8	pd 1/16	PL	8 x 3/8	1 0	8 CUTS	10 B		413			1/14
		ONE	pk	PL	3 5/16 x 1/2	0 10 7/16			57C 3680	400			2 2/3
		ONE	pm	PL	3 5/16 x 1/2	0 5				404			2 2/3
		ONE	pn	PL	4 1/2 x 1/2	0 10 1/2				400			2 2/3
		ONE	pp	PL	10 1/2 x 1/2	0 11 7/16				404			2 2/3
		ONE	ba	BR PL	2 1/2 x 3/4	15 5 7/16			3913	600			1/14
		ONE	bb	BR PL	2 x 1	15 4 1/8				603			1/13
		ONE	bc	BR PL	2 1/2 x 3/4	15 0				604			1/14
		ONE	bd	BR PL	2 x 1	15 3				603			1/13
		17	bm90	BR PL	1 1/2 x 3/8	1 4			57C 686	606	BENT		1/10
		2	bn90	BR PL	1 1/2 x 3/8	1 4			57C 686	606	BENT		1/10
		ONE	bv	BR PL	2 1/2 x 3/4	0 11 7/8			3913	602			1/14
		ONE	bw	BR PL	2 x 1	0 5 7/8			3913	603			1/13
ONE	120ED27				EXPANSION DAM								
		ONE	pf	PL	12 x 3/4	30 7/16	85% CUTS	10 B	3910	312			1/4
		ONE	pg	PL	10 x 1/2	30 0			57C 3776	407			1/10
		8	ph 1/16	PL	8 x 3/8	1 0	8 CUTS	10 B	3909	413			1/12
		8	pn 1/16	PL	8 3/8 x 3/8	1 0			3909	411			1/17
		ONE	ps	PL	10 1/2 x 1/2	1 4			57C 3680	400			2 2/3
		ONE	pt	PL	5 x 1/2	1 4			57C 3680	402			2 2/3
		ONE	bg	BR PL	2 x 1	15 3 5/8			3913	603			1/13
		ONE	bh	BR PL	2 x 1	15 3			3913	603			1/13
		18	bm90	BR PL	1 1/2 x 3/8	1 4			57C 686	606	BENT		1/10
		2	bn90	BR PL	1 1/2 x 3/8	1 4			57C 686	606	BENT		1/10

SHEET TOTAL

120

EXPANSION DAM - SUBR Nº 2
BRIDGE OVER NORTHWESTERN PKWY & 22ND ST.
DEPT. OF HIGHWAYS, COMMONWEALTH OF KENTUCKY
JEFFERSON CTY. F.A.P. I64-2(73) 2; S.P.56, 8273-7681
CONTRACTOR: MATTINGLY BRIDGE CO.

NASHVILLE BRIDGE COMPANY
NASHVILLE, TENN.
BESSEMER PLANT

APPROVED FOR SHOP
NMP 5/6/70 CHIEF DRAFTSMAN
WRC 5/6/70 CHIEF ENGINEER
REVISION NOTES

HOLES A2 NOTED
FIELD CONN. SEE GN1
SHOP PAINT
FIELD
DRAWN BY J.B. DATE 12-16-69
CHECKED BY VM DATE 1/23/70
DATE PAINTED

BILL MATERIAL NO. 120
CONT. CG736
S.O. B-5728
DRAWING NO. 121

B. K. ELLIOTT CO., PGH., PA. REORDER A-6573

BRIDGE

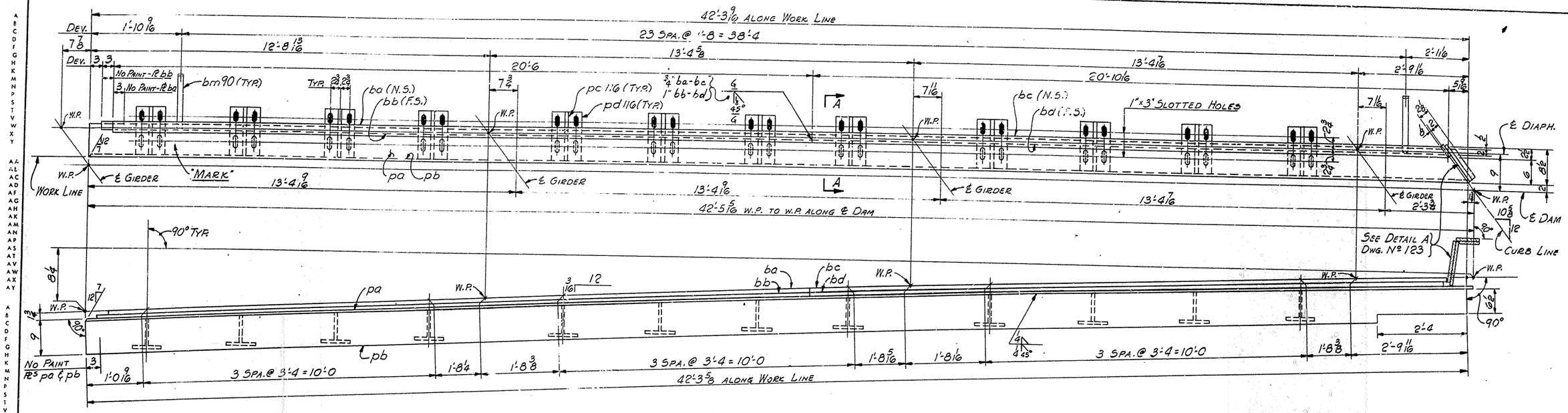

MAKE ONE EXPANSION DAM MARK 122ED24

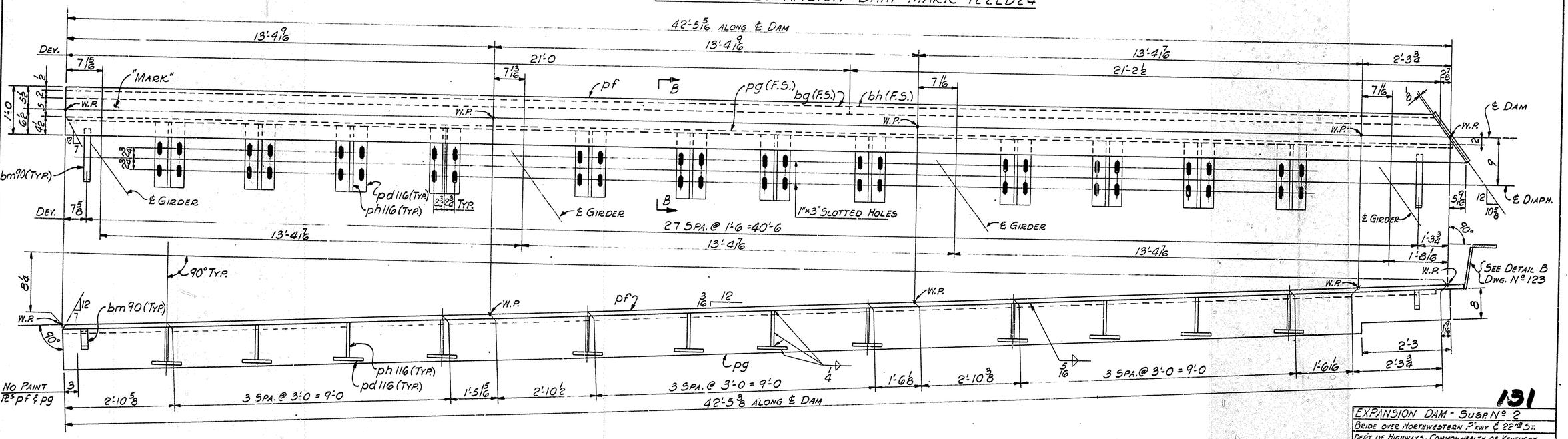

MAKE ONE EXPANSION DAM MARK 122ED28

NOTES:
ALL MATERIA ASTM A36.
FOR GENERAL NOTES SEE DWG. G.N.1.
EXPANSION DAMS ARE TO BE ASSEMBLED IN THE SHOP IN THEIR RELATIVE FINAL POSITION AND INSPECTED FOR F.T.
WORK THIS DWG. WITH DWG. 123.

131

EXPANSION DAM - SUBR. Nº 2
BRIDGE OVER NORTHWESTERN P'KWY & 22ND ST.
DEPT OF HIGHWAYS, COMMONWEALTH OF KENTUCKY
JEFFERSON CTY., F.A.P. IGA-2(73)2; SPSL-2273-2181
CONTRACTOR: MATTINGLY BRIDGE CO

NASHVILLE BRIDGE COMPANY
NASHVILLE, TENN.
BESSEMER PLANT

APPROVED FOR SHOP
NMF 5/6/70 CHIEF DRAFTSMAN
JAK 4/4/70 CHIEF ENGINEER
REVISION NOTES
APPR. 4/2/70

HOLES As NOTED
FIELD CONN. 3/8"
SHOP PAINT SEE G.N.1
FIELD

DRAWN BY J.D. DATE 12-19-69
IN CHARGE: GATTI (TENDOR)
CHECKED BY VM DATE 1/23/70
DATE PRINTED

BILL OF MATERIAL No 122
CONT. C6736
S.O. B-5728
DRAWING No. 122

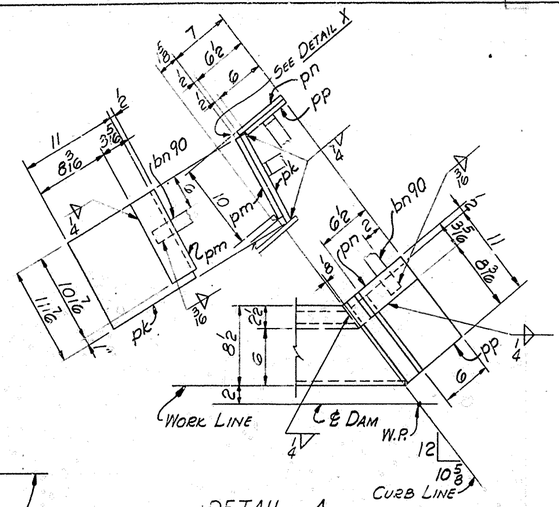

DETAIL A

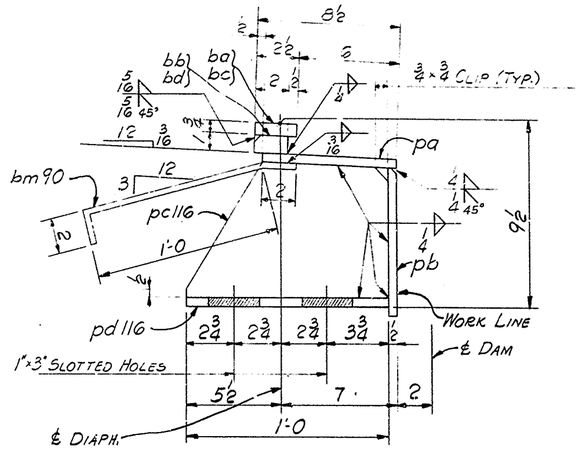

SECTION A-A

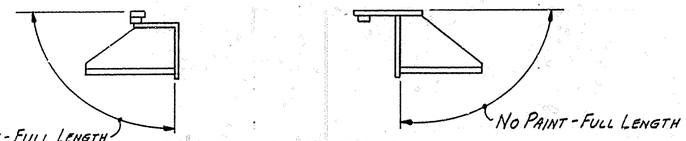

PAINT SKETCHES

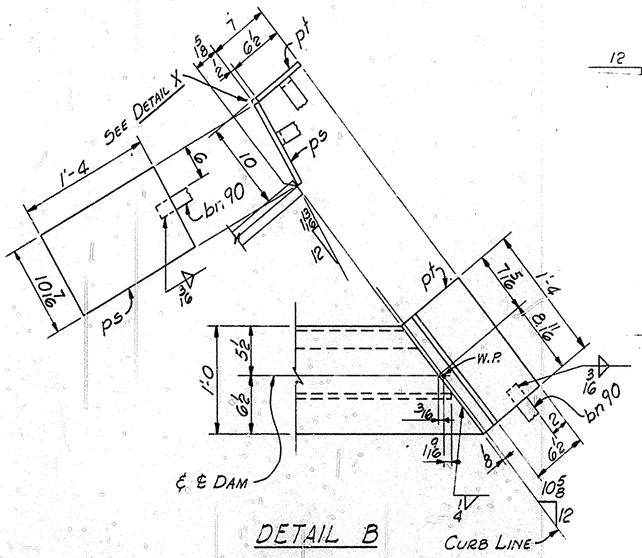

DETAIL B

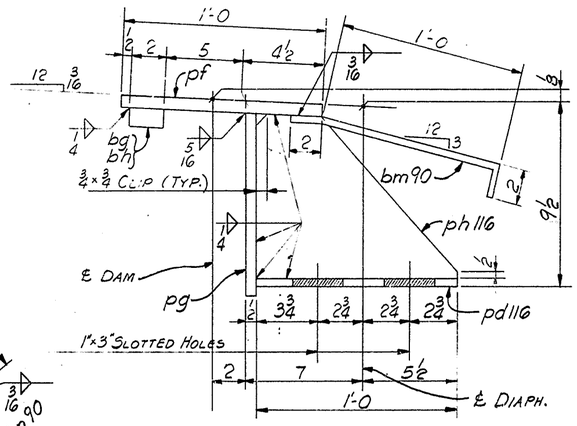

SECTION B-B

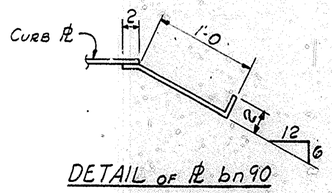

DETAIL OF ℄ bn90

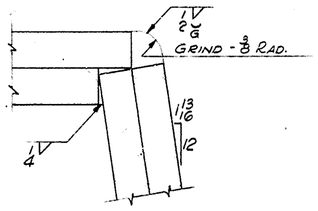

DETAIL X

NOTES:
ALL MATERIAL ASTM A36.
FOR GENERAL NOTES SEE DWG. GN1.
WORK THIS DWG. WITH DWG. 122.

NASHVILLE BRIDGE COMPANY

Shop Order No. B-5728 — Commonwealth of Kentucky, Dept. of Highways, Bridge over Northwestern Pkwy & 22nd St. Jefferson County — Bill No. 122

Work Order No. — Drawing No. 122 & 123

Contract No. C6736 — Fabrication Bessemer Plant

Item — Weights by — Checked by

Shop	Shipping Mark	Item Quant.	Assembly Mark	Mat.	Section	Finished Length Ft. In.	Ordered Length Ft. In.		P.O. No.	Item No.	Remarks	Rivets Size	Rivets No.	AISC Weight
					MAT. ASTM A36									
One	122		ED24		EXPANSION DAM									
		One	pa	PL	8 × ½	42	5⅝		3910	401				19⅞
		One	pb	PL	8½ × ½	42	3⅜		3910	401				18⅞
		12	116	PL	6½ × ⅜	1	0		3909	411				19/7
		12	116 Rd	PL	8 × ⅜	1	0	88 cuts	3909	413	10 RB			19/6
		One	pk	PL	11 × ½	0	11⅞		STK 3680	404				23/6
		One	pm	PL	3 5/16 × ½	0	10⅞			404				23/6
		One	pn	PL	3 7/16 × ½	0	6½			404				23/6
		One	pp	PL	6 × ½	0	11			404				23/7
		One	ba	Bar	2½ × ¾	20	6		3913	603				19/7
		One	bb	Bar	2 × 1	20	9			603				19/6
		One	bc	Bar	2½ × ¾	20	9½			603				19/7
		One	bd	Bar	2 × 1	20	9½			603				19/6
		24	bm90	Bar	1½ × ⅜	1	4		STK 6806	606	BENT			19/10
		2	bn90	Bar	1½ × ⅜	1	4		STK 6806	606	BENT			19/10
One	122		ED28		EXPANSION DAM									
		One	pf	PL	12 × ¾	42	10⅜	73½ cuts	3910	313				19/6
		One	pg	PL	10 × ½	42	6 15/16		3910	401				18/8
		12	116 Rd	PL	8 × ⅜	1	0	88 cuts	3909	413	10 RB			19/6
		12	116		8⅜ × ⅜	1	0		3909	411				19/7
		One	ps	PL	10 7/16 × ½	1	4		STK 3680	404				23/6
		One	pt	PL	6½ × ½	1	4		STK 3680	404				23/6
		One	bg	Bar	2 × 1	21	0		3913	603				19/6
		One	bh	Bar	2 × 1	21	2½		3913	603				19/6
		28	bm90	Bar	1½ × ⅜	1	4		STK 6806	606	BENT			19/10
		2	bn90	Bar	1½ × ⅜	1	4		STK 6806	606	BENT			19/10

Sheet total

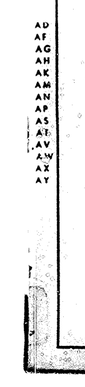

132

EXPANSION DAM - Subp. No 2
Bridge over Northwestern Pkwy & 22nd St.
Dept. of Highways, Commonwealth of Kentucky
Jefferson Cty. F.A.P. 164-2(12)2-15-6 (123-76 B)
Contractor: Mattingly Bridge Co.

NASHVILLE BRIDGE COMPANY
NASHVILLE, TENN.
BESSEMER PLANT

Approved for Shop — Chief Draftsman — Chief Engineer — Revision Notes

Holes: As noted — Field Conn. / Shop Paint / Field: See GN1

Drawn by: J.B. Date: 12-19-69
Checked by: VM Date: 1/23/70
Date Printed

Bills Material No. 122 — Cont. C6736 — S.O. B-5728 — Drawing No. 123

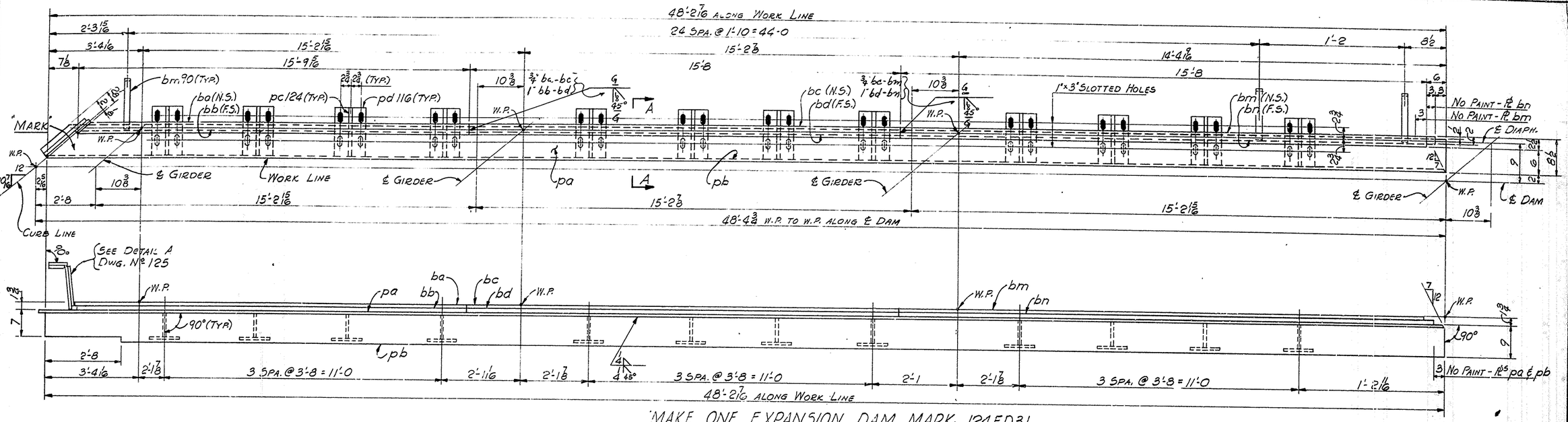

MAKE ONE EXPANSION DAM MARK 124ED31

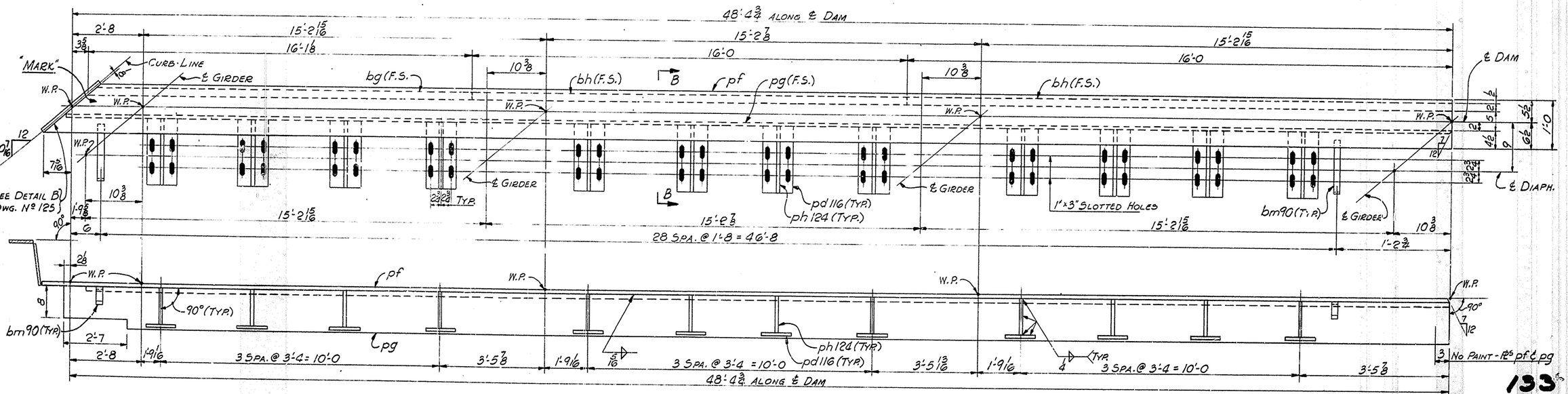

MAKE ONE EXPANSION DAM MARK 124ED35

NOTES:
ALL MATERIA ASTM A36.
FOR GENERAL NOTES SEE DWG. GN1.
EXPANSION DAMS ARE TO BE ASSEMBLED IN THE SHOP IN THEIR RELATIVE FINAL POSITION AND INSPECTED FOR FIT.
WORK THIS DWG. WITH DWG. 125

133

EXPANSION DAM - SUBP. Nº 3
BRIDGE OVER NORTHWESTERN PKWY & 22ND ST.
DEPT OF HIGHWAYS, COMMONWEALTH OF KENTUCKY
JEFFERSON CTY., F.A.P. IG4 Z(73)2; SP.56-P273-7LB1
CONTRACTOR: MATTINGLY BRIDGE CO

NASHVILLE BRIDGE COMPANY
NASHVILLE, TENN.
BESSEMER PLANT

APPROVED FOR SHOP	
WMF 3/6/70	CHIEF DRAFTSMAN
3/6/70	CHIEF ENGINEER
REVISION NOTES	APPR. 3/5/70
DRAWN BY J.B.	DATE 1/6/70
IN CHARGE: GATTI MENDEZ	
HOLES As NOTED	
FIELD CONN.	
SHOP PAINT See GN1	
FIELD	
CHECKED BY	DATE 1/26/70
DATE PRINTED	
BILLS MATERIAL NO. 124	CONT. C6736
S.O.B-5728	DRAWING NO. 124

B. K. ELLIOTT CO. PEN., PA. REORDER A-6573

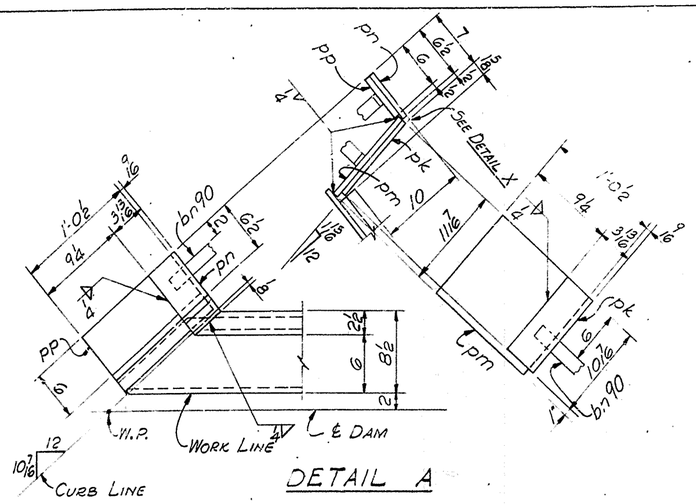

DETAIL A

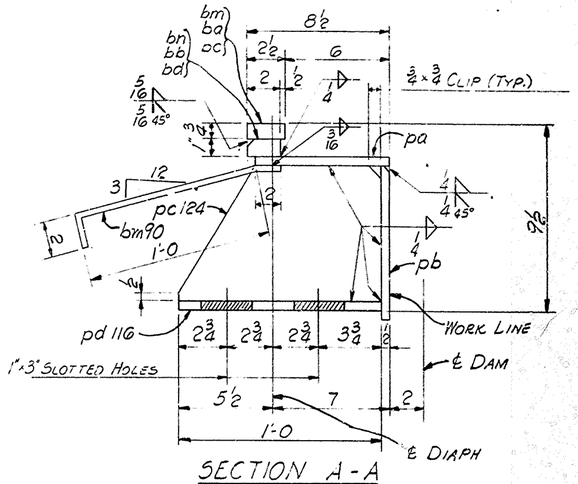

SECTION A-A

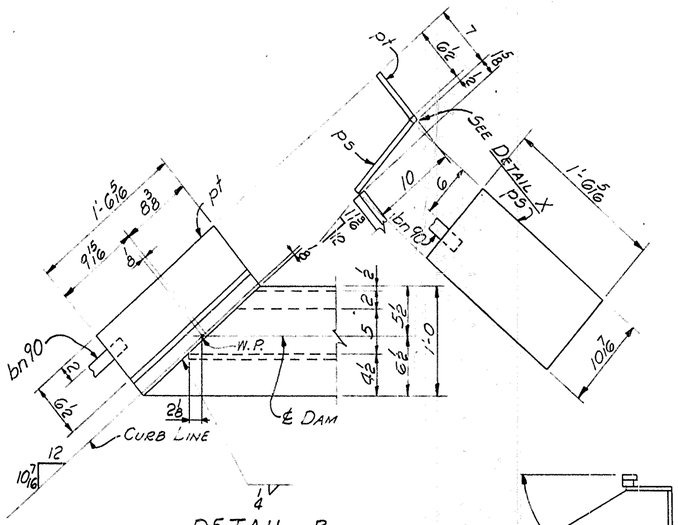

DETAIL B

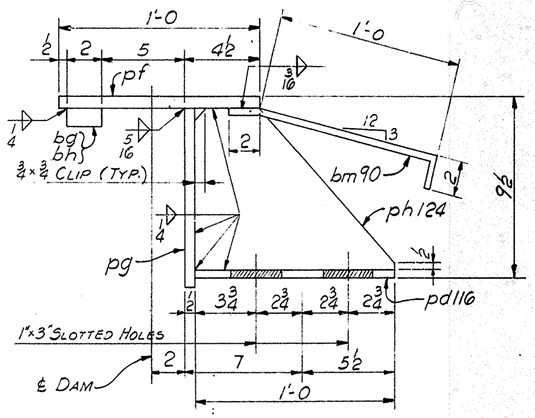

SECTION B-B

PAINT SKETCHES

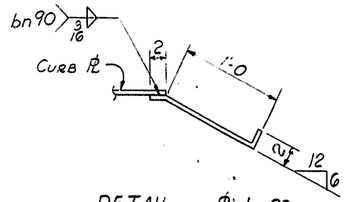

DETAIL OF ℞ bn90

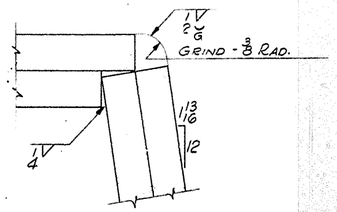

DETAIL X

NOTES:
ALL MATERIAL ASTM A36.
FOR GENERAL NOTES SEE DWG. GN1.
WORK THIS DWG. WITH DWG. 124.

NASHVILLE BRIDGE COMPANY

SHOP ORDER NO. B-5728 — COMMONWEALTH OF KENTUCKY, DEPT. OF HIGHWAYS, BRIDGE OVER NORTHWESTERN PKWY & 22ND ST. JEFFERSON COUNTY — BILL NO. 124 — DRAWING NO. 124 & 125

WORK ORDER NO. — CONTRACT NO. C6736 — FABRICATION BESSEMER PLANT

ITEM — WEIGHTS BY — CHECKED BY

SHIP	SHIPPING MARK	ITEM COUNT	ASSEMBLY MARK	SHAPE	SECTION	FINISHED LENGTH FT. IN.	ORDERED LENGTH FT. IN.	P.O. NO.	ITEM NO.	REMARKS	SPECIF. WEIGHT	AISC WEIGHT
					MAT. ASTM A36							
ONE	124	ED31			EXPANSION DAM							
		ONE	pa	PL	8 × 1/2	48 3/8		3910	401			29.9
		ONE	pb	PL	8 1/2 × 1/2	48 2/16		3910	401			29.8
		12	pg	PL	6 1/2 × 3/8	1 0		3909	411			24.64
		12	ph	PL	8 × 3/8	1 0	SE CUTS 0.68	3909	413			23.63
		ONE	pk	PL	3 13/16 × 1/2	0 10 1/2		STK 3680	404			21.3
		ONE	pm	PL	11 7/16 × 1/2	1 0 1/2			404			22.4
		ONE	pn	PL	3 13/16 × 1/2	0 6 1/2			404			22.6
		ONE	pp	PL	6 × 1/2	1 0 1/2			404			22.3
		ONE	ba	Bar	2 1/2 × 3/4	15 9 7/8		3913	603			20.7/20
		ONE	bb	Bar	2 × 1	15 3 3/8			603			20.7/20
		ONE	bc	Bar	2 1/2 × 3/4	15 7 1/4			603			20.6/21
		ONE	bd	Bar	2 × 1	15 7 1/4			603			20.6/20
		ONE	bm	Bar	2 1/2 × 3/4	15 8			603			20.7/21
		ONE	bn	Bar	2 × 1	15 11			603			20.7/20
		20	bm90	Bar	1 2 × 3/8	1 4		STK 6862	603	BENT		20.6/26
		2	bn90	Bar	1 2 × 3/8	1 4		STK 6862	603	BENT		20.6/26
ONE	124	ED35			EXPANSION DAM							
		ONE	pf	PL	12 × 3/4	49 0 1/16	73 1/2 CUTS 0.68 & 12	3910	398			29.6/26
		ONE	pd	PL	10 × 1/2	48 6 1/2		3910	401			29.8/27
		12	pg	PL	8 × 3/8	1 0	SE CUTS 0.68	3909	413			23.6/23
		12	ph	PL	8 3/4 × 3/8	1 0		3909	411			24.6/24
		ONE	ps	PL	10 1/16 × 1/2	1 6 1/2		STK 3680	404			21.6/21
		ONE	pt	PL	6 1/2 × 1/2	1 6 1/16		STK 3680	404			21.6/21
		ONE	bg	Bar	2 × 1	16 1 1/8		3913	603			20.7/20
		2	bh	Bar	2 × 1	16 0		3913	603			20.7/20
		29	bm90	Bar	1 2 × 3/8	1 4		STK 6862	603	BENT		20.6/26
		2	bn90	Bar	1 2 × 3/8	1 4		STK 6862	603	BENT		20.6/26

SHEET TOTAL

134

EXPANSION DAM - SUSP. Nº 3
BRIDGE OVER NORTHWESTERN PKWY & 22ND ST.
DEPT. OF HIGHWAYS, COMMONWEALTH OF KENTUCKY
JEFFERSON CTY. F.A.P. 164-2(73) & SPSL-1273-1281
CONTRACTOR: MATTINGLY BRIDGE CO.

NASHVILLE BRIDGE COMPANY
NASHVILLE, TENN. — BESSEMER PLANT

APPROVED FOR SHOP — REVISION NOTES

HOLES: As — FIELD CONN.: SEE GN1 — SHOP PAINT — FIELD

DRAWN BY: 1/8/70 — CHECKED BY: 1/26/70 — DATE PRINTED

BILL MATERIAL NO. 124 — CONT. C 6736 — S.O. B-5728 — 125

BRIDGE

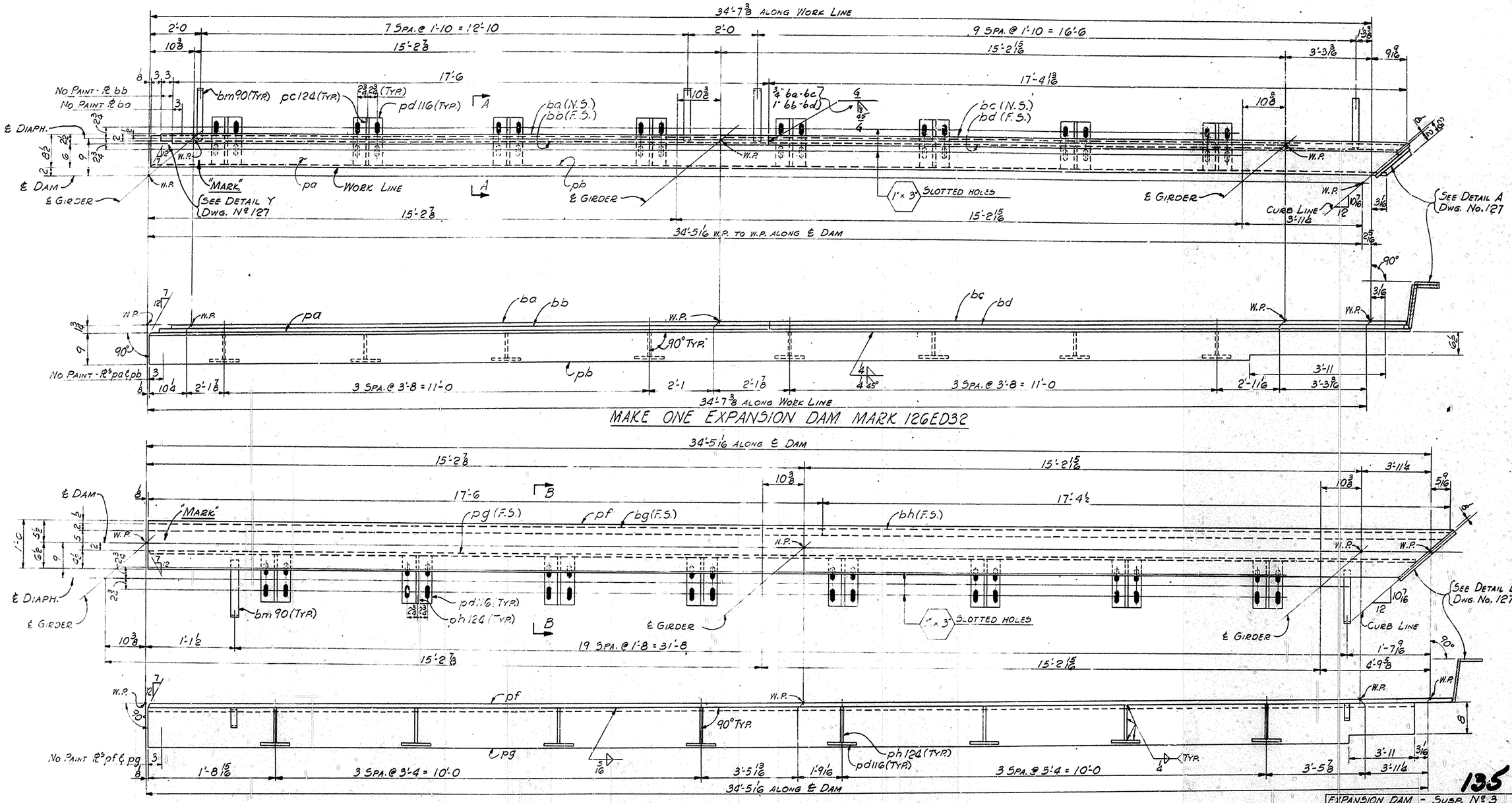

MAKE ONE EXPANSION DAM MARK 126ED32

MAKE ONE EXPANSION DAM MARK 126ED36

NOTES:
ALL MATERIAL ASTM A36.
FOR GENERAL NOTES SEE DWG. No. GN1.
EXPANSION DAMS ARE TO BE ASSEMBLED IN THE SHOP IN THEIR RELATIVE FINAL POSITION AND INSPECTED FOR FIT.
WORK THIS DWG. WITH DWG. No. 127.

135

EXPANSION DAM - SUSP. No. 3
BRIDGE OVER NORTHWESTERN PWAY & 22ND ST.
DEPT. OF HIGHWAYS, COMMONWEALTH OF KENTUCKY
JEFFERSON CTY., F.A.P. IG4-2(73)2; SPSL-2273-7LB1
CONTRACTOR: MATTINGLY BRIDGE CO.

NASHVILLE BRIDGE COMPANY
NASHVILLE, TENN.
BESSEMER PLANT

APPROVED FOR SHOP
W.M.F. 3/6/70 CHIEF DRAFTSMAN
J.A.C. 3/6/70 CHIEF ENGINEER
REVISION NOTES
APPR. 3/5/70

HOLES: As NOTED
FIELD CONN.: 3/8
SHOP PAINT: SEE GN1
FIELD:

DRAWN BY: J.B. DATE
IN CHARGE: GATTI (REV. 3/70)
CHECKED BY: V.M. DATE 1/26/70
DATE PRINTED

BILL OF MATERIAL No. 126
CONT. C6736
S.O. B-5728
DRAWING No. 126

B. K. ELLIOTT CO. PGH. PA. RECORDER A-6373

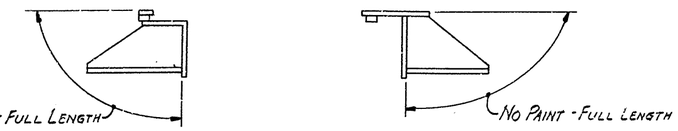

PAINT SKETCHES

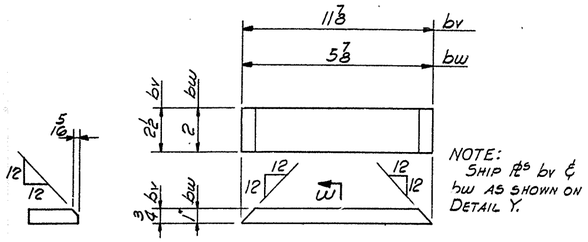

DETAIL OF Pls bv & bw

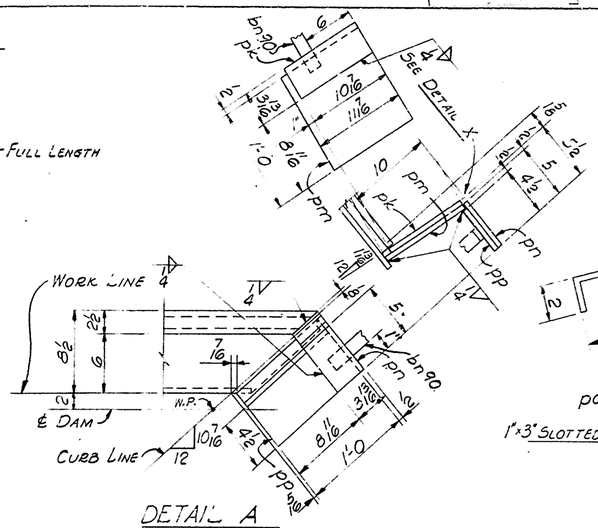

DETAIL A

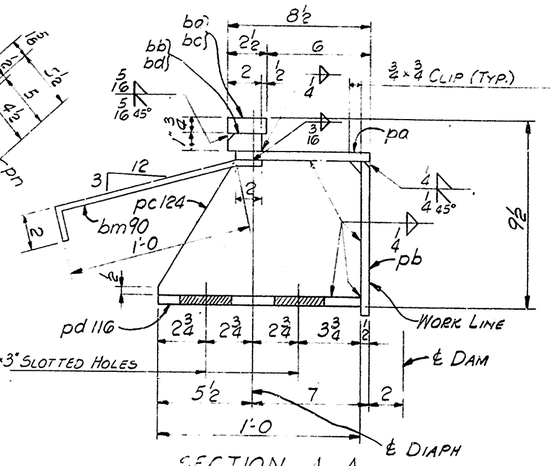

SECTION A-A

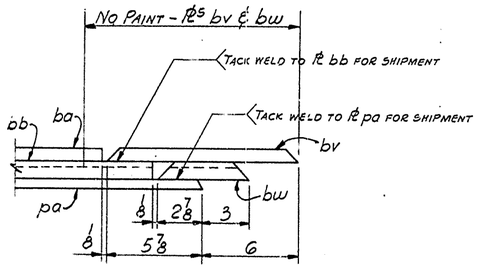

DETAIL Y

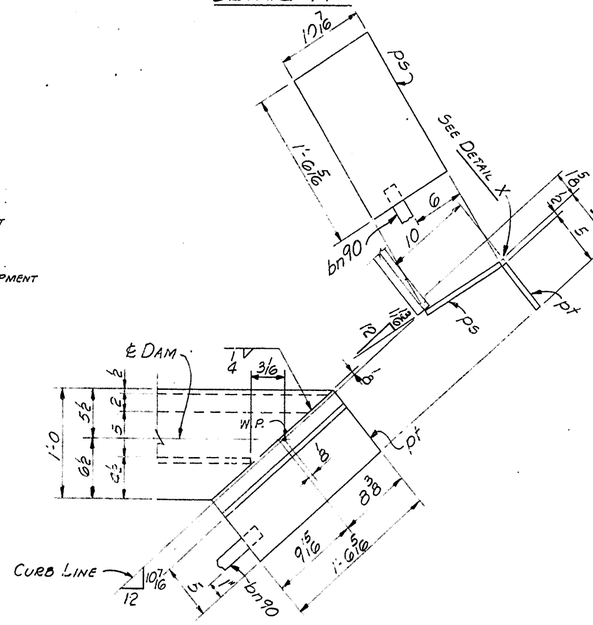

DETAIL B

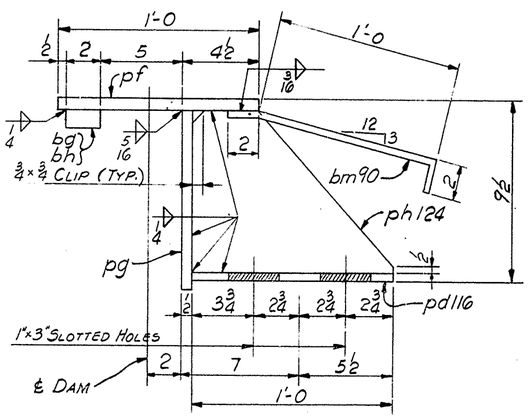

SECTION B-B

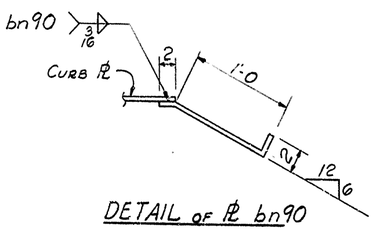

DETAIL OF Pl bn90

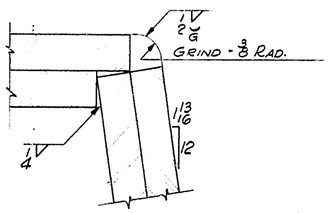

DETAIL X

NOTES:
ALL MATERIAL ASTM A36.
FOR GENERAL NOTES SEE DWG. GN1.
WORK THIS DWG. WITH DWG. 126.

NASHVILLE BRIDGE COMPANY

Shop Order No. B-5728 — Commonwealth of Kentucky, Dept. of Highways, Bridge over Northwestern Pkwy & 22nd St. Jefferson County — Bill No. 126 — Drawing No. 126 & 127

Work Order No. — Contract No. C6736 — Fabrication Bessemer Plant

Item — Weights by — Checked by

Ship	Shipping Mark	Item Quant.	Assembly Mark	Finish	Section	Finished Length Ft. In.	Ordered Length Ft. In.			P.O. No.	Item No.	Remarks	Specif. Weight	A.I.S.C. Weight
					Mat. ASTM A36									
One	126	ED32			Expansion Dam									
		One	pa	Pl	8×½	35	5⅝			3705	602			
		One	pb	Pl	8½×½	34	10⅝			3909	602			
		8	Pl 124	Pl	6⅞×⅜	1	0			3909	411			
		8	Pl 116	Pl	8×⅜	1	0	BE 6078	OFB	3909	413			
		One	pk	Pl	3 13/16×½	0	10⅞			5786 3680	606			
		One	pm	Pl	11⅞×½	1	0				606			
		One	pn	Pl	3 13/16×½	0	5				606			
		One	pp	Pl	4½×½	1	0				606			
		One	ba	Bl/Pl	2½×¾	17	6			3913	603			
		One	bb	Bl/Pl	2×1	17	9				603			
		One	bc	Bl/Pl	2½×¾	17	4 11/16				603			
		One	bd	Bl/Pl	2×1	17	4⅝				603			
		18	bm90	Bl/Pl	1½×⅜	1	4			5786 6086	606	Bent		
		2	bn90	Bl/Pl	1½×⅜	1	4			5786 6086	606	Bent		
		One	bv	Bl/Pl	2½×¾	0	11⅝			3913	603			
		One	bw	Bl/Pl	2×1	0	5⅝			3913	603			
One	126	ED36			Expansion Dam									
		One	pf	Pl	12×¾	34	11⅝	Cl/Ct	3812	3510	315			
		One	pg	Pl	10×½	34	1⅝			3909	602			
		8	Pl 116	Pl	8×⅜	1	0	BE 6078	OFB	3909	413			
		8	Pl 124	Pl	8 3/8×⅜	1	0			3909	411			
		One	ps	Pl	10⅞×½	1	6⅞			5786 3680	606			
		One	pt	Pl	5×½	1	6⅞			5786 3680	606			
		One	bg	Bl/Pl	2×1	17	6			3913	603			
		One	bh	Bl/Pl	2×1	17	4½			3913	603			
		20	bm90	Bl/Pl	1½×⅜	1	4			5786 6086	606	Bent		
		2	bn90	Bl/Pl	1½×⅜	1	4			5786 6086	606	Bent		

Sheet Total

136

EXPANSION DAM - SUSP. Nº 3
BRIDGE OVER NORTHWESTERN PKWY & 22ND ST.
DEPT. OF HIGHWAYS, COMMONWEALTH OF KENTUCKY
JEFFERSON CTY. F.A.P. IG4-2(73)2; SP56-7(273-72LB)
CONTRACTOR: MATTINGLY BRIDGE CO.

NASHVILLE BRIDGE COMPANY
NASHVILLE, TENN.
BESSEMER PLANT.

Approved for Shop — Chief Draftsman — Chief Engineer — Revision Notes

Drawn by J.B. Date 12-29-69 (In charge: G.T.T.) (T.C.B.)
Checked by VM Date 1/26/70
Date Printed
Hole No. 12 — Field Conn. / Shop Pkwy. / Field: See GN1

Bills Material No. 126 — Cont. C G736 — S.O. B-5728 — Drawing No. 127

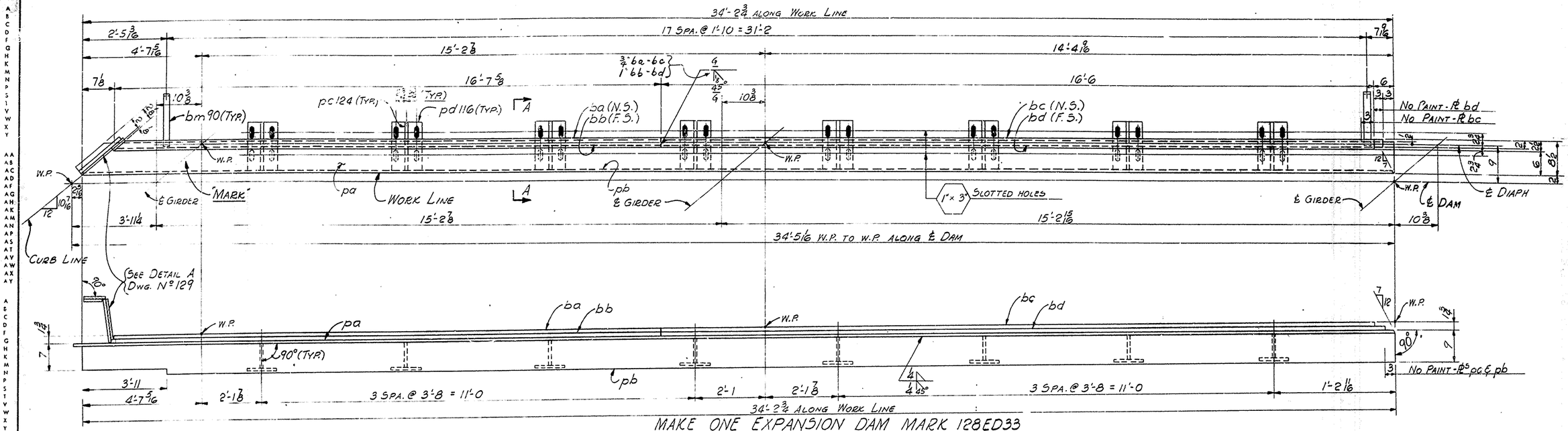

MAKE ONE EXPANSION DAM MARK 128ED33

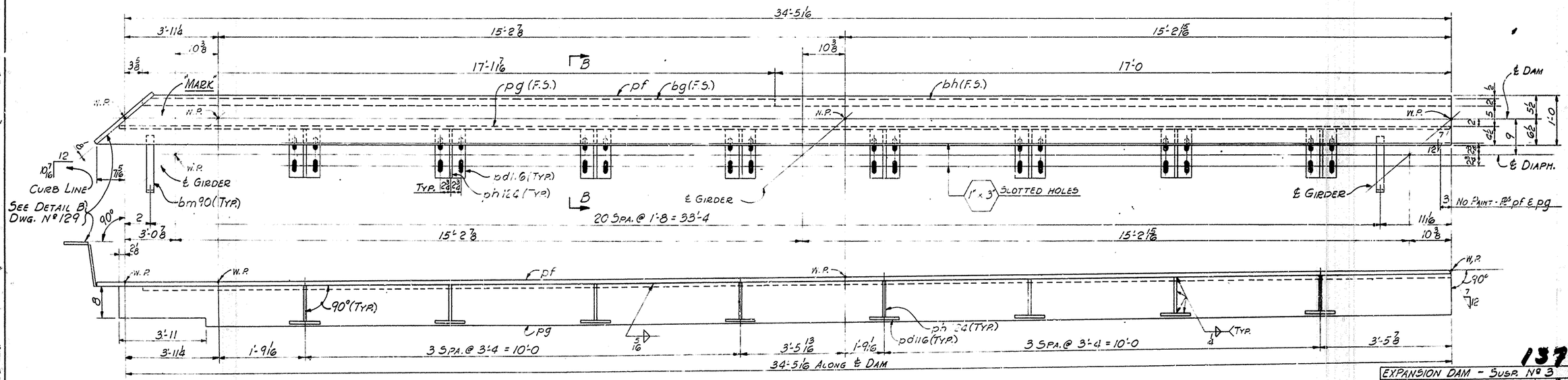

MAKE ONE EXPANSION DAM MARK 128ED37

NOTES:
ALL MATERIAL ASTM A36.
FOR GENERAL NOTES SEE DWG. No. GN1.
EXPANSION DAMS ARE TO BE ASSEMBLED IN THE SHOP IN THEIR RELATIVE FINAL POSITION AND INSPECTED FOR FIT.
WORK THIS DWG. WITH DWG. No. 129

157

EXPANSION DAM - SUBP. Nº 3
BRIDGE OVER NORTHWESTERN P'WAY & 22ND ST.
DEPT. OF HIGHWAYS, COMMONWEALTH OF KENTUCKY
JEFFERSON CTY., F.A.P. IG42(73)2; SPSL-P273-7LB1
CONTRACTOR: MATTINGLY BRIDGE CO.

NASHVILLE BRIDGE COMPANY
NASHVILLE, TENN.
BESSEMER PLANT

APPROVED FOR SHOP
WMF 3/6/70 CHIEF DRAFTSMAN
MFC 3/6/70 CHIEF ENGINEER
REVISION NOTES
APPR. 3/5/70

HOLES AS NOTED
FIELD CONN. 3Ø
SHOP PAINT } SEE GN1
FIELD

DRAWN BY J.B. DATE 1/5/70
IN CHARGE: APPT. (TENSON)
CHECKED BY VM DATE 1/26/70
DATE PRINTED

BILL OF MATERIAL No.	CONT. C6736	DRAWING No.
128	S. O. B-5728	128

BRIDGE

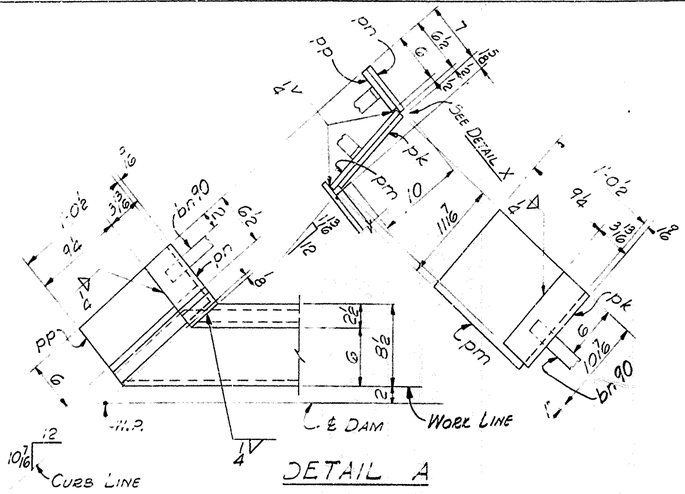

DETAIL A

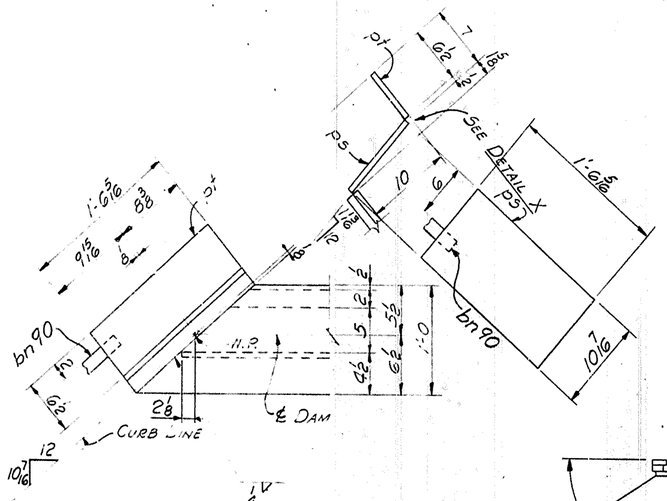

DETAIL B

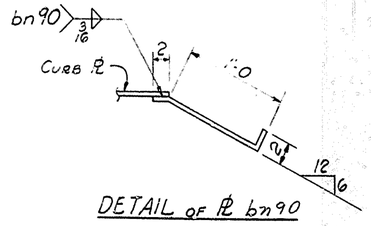

DETAIL OF ℞ bn90

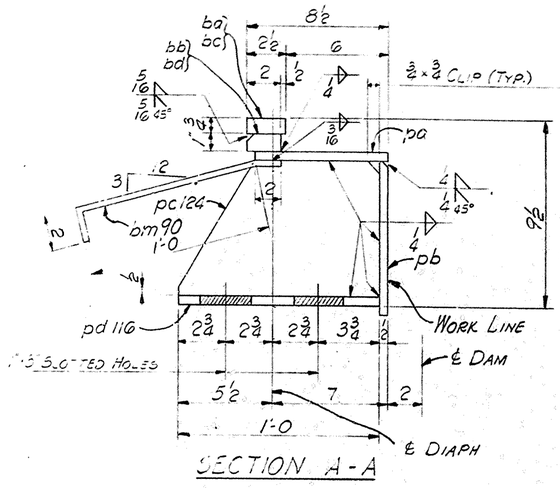

SECTION A-A

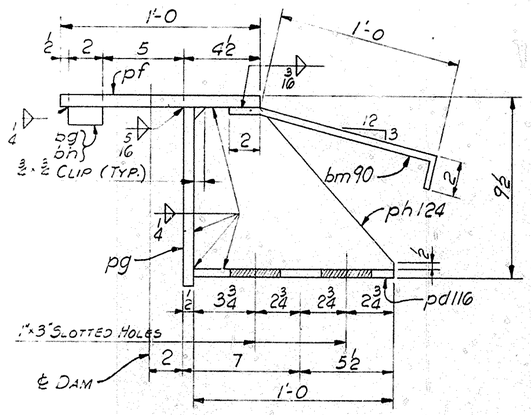

SECTION B-B

PAINT SKETCHES

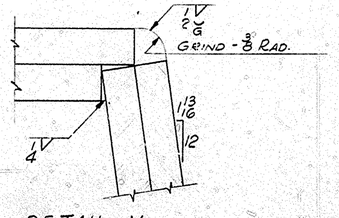

DETAIL X

NOTES:
ALL MATERIAL ASTM A36.
FOR GENERAL NOTES SEE DWG. GN1.
WORK THIS DWG. WITH DWG. 128.

NASHVILLE BRIDGE COMPANY

SHOP ORDER Nº. B-5728
WORK ORDER NO.
CONTRACT NO. C6736

COMMONWEALTH OF KENTUCKY, DEPT. OF HIGHWAYS, BRIDGE OVER NORTHWESTERN PKWY & 22ND ST. JEFFERSON COUNTY

BILL NO. 128
DRAWING NO. 128 & 129

FABRICATION BESSEMER PLANT

ITEM | WEIGHTS BY | CHECKED BY

SHIP	SHIPPING MARK	ITEM QUANT.	ASSEMBLE MARK	PIECE MARK	SECTION	FINISHED LENGTH FT. IN.	ORDERED LENGTH FT. IN.	P.O. NO.	ITEM NO.	REMARKS	SPECIF. WEIGHT	A.B.C. WEIGHT
					MAT ASTM A36							
ONE	128	ED33			EXPANSION DAM							
		ONE	pa	PL	8 × 1/2	34 4 3/16				3809 402		2 2/16
		ONE	pb	PL	8 1/2 × 1/2	34 2 3/8				3809 402		2 2/16
		8	pc 124	PL	6 1/8 × 3/8	1 0				3809 411		2 2/16
		8	pd 116	PL	8 × 3/8	1 0	8E CUTS 10EB			3809 413		2 2/16
		ONE	pk	PL	3 1/2 × 1/2	0 10 7/16				STK 3680 404		2 2/16
		ONE	pm	PL	11 1/16 × 1/2	1 0 1/2				404		2 1/4
		ONE	pn	PL	3 1/2 × 1/2	0 6 1/2				404		2 1/4
		ONE	po	PL	6 × 1/2	1 0 1/2				404		2 1/4
		ONE	ba	PL	2 1/2 × 3/4	16 7 1/2				3813 603		2 2/16
		ONE	bb	PL	2 × 1	16 6 3/4				603		2 2/16
		ONE	bc	PL	2 1/2 × 3/4	16 6				603		2 2/16
		ONE	bd	PL	2 × 1	16 9				603		2 2/16
		18	bm90	L	1 1/2 × 3/8	1 4				STK 6806 606	BENT	2 2/16
		2	bn90	L	1 1/2 × 3/8	1 4				STK 6806 606	BENT	2 2/16
ONE	128	ED37			EXPANSION DAM							
		ONE	pf	PL	12 × 3/4	35 0 3/8	6I CUTS 5B12			3810 315		2 2/2
		ONE	pg	PL	10 × 1/2	34 7 1/16				3809 402		2 2/2
		8	pp 116	PL	8 × 3/8	1 0	8E CUTS 10EB			3809 413		2 2/16
		8	pq 124	PL	8 3/8 × 3/8	1 0				3809 411		2 2/16
		ONE	ps	PL	10 1/2 × 1/2	1 6 7/16				STK 3680 404		2 2/16
		ONE	pt	PL	6 1/2 × 1/2	1 6 7/16				STK 3680 404		2 2/16
		ONE	bg	PL	2 × 1	17 1 1/16				3813 603		2 2/16
		ONE	bh	PL	2 × 1	17 0				3813 603		2 2/16
		21	bm90	L	1 1/2 × 3/8	1 4				STK 6806 606	BENT	2 2/16
		2	bn90	L	1 1/2 × 3/8	1 4				STK 6806 606	BENT	2 2/16

SHEET TOTAL

EXPANSION DAM - SUSP. Nº 3
BRIDGE OVER NORTHWESTERN PKWY & 22ND ST.
DEPT. OF HIGHWAYS, COMMONWEALTH OF KENTUCKY
JEFFERSON CTY. F.A.P. IG4-2(73)2; SPSL-1273-7(8)
CONTRACTOR: MATTINGLY BRIDGE CO.

NASHVILLE BRIDGE COMPANY
NASHVILLE, TENN.
BESSEMER PLANT

APPROVED FOR SHOP
N.A.F. 11/6/70 CHIEF DRAFTSMAN
A.R.C. 11/7/70 CHIEF ENGINEER
REVISION NOTES

HOLES AS NOTED
FIELD CONN. SEE GN1
SHOP PAINT
FIELD

DRAWN BY J.B. DATE 11/5/70
IN CHARGE G.A.P.T. (T.P.S.O.)
CHECKED BY V.M. DATE 1/26/70
DATE PRINTED

BILL MATERIAL NO. 128
CONT. C6736
S.O. B-5728
DRAWING NO. 129

128

BRIDGE

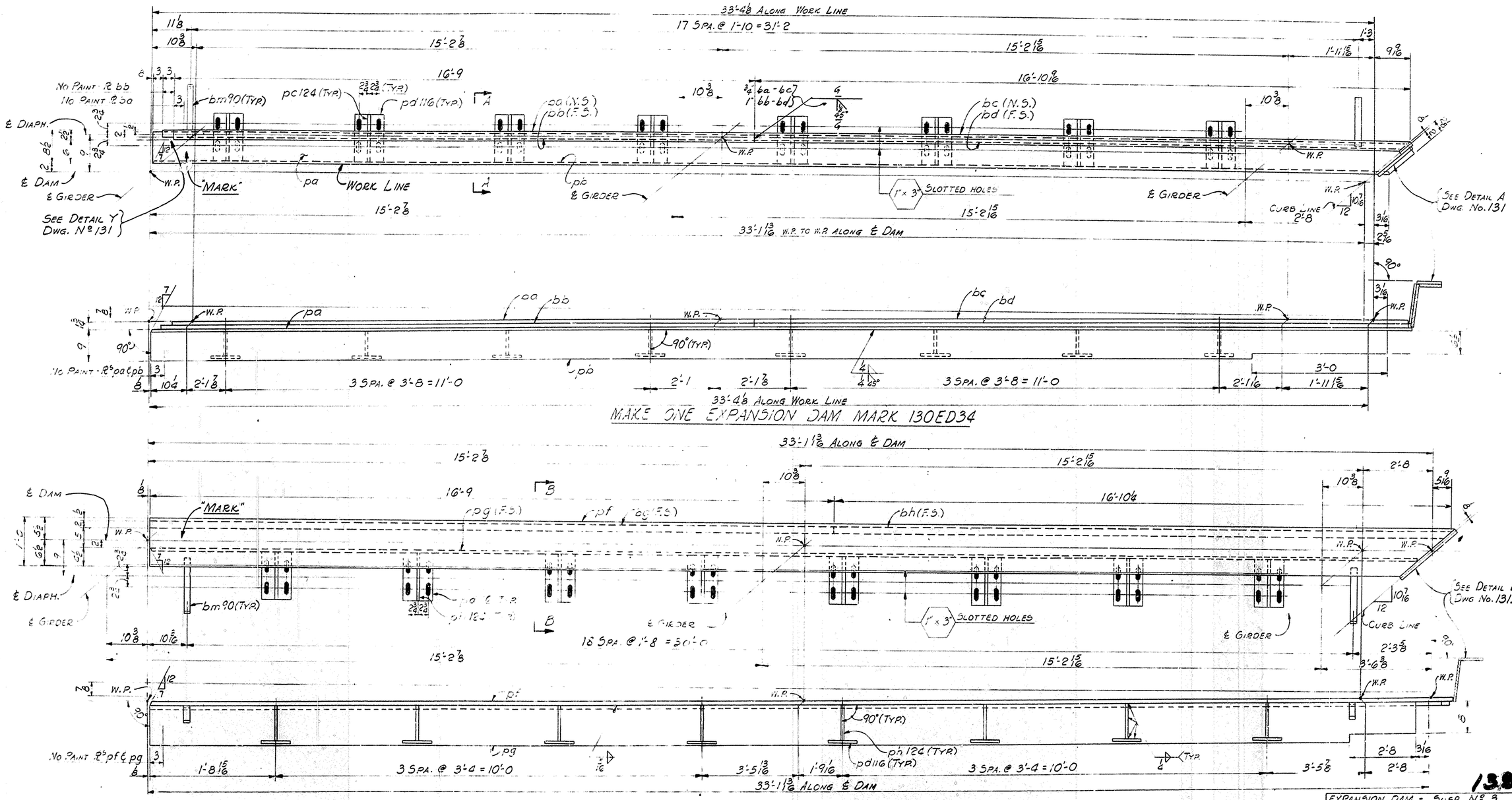

MAKE ONE EXPANSION DAM MARK 130ED34

MAKE ONE EXPANSION DAM MARK 130ED38

NOTES:
ALL MATERIAL ASTM A36.
FOR GENERAL NOTES SEE DWG. No. GN1.
EXPANSION DAMS ARE TO BE ASSEMBLED IN THE SHOP IN THEIR RELATIVE FINAL POSITION AND INSPECTED FOR FIT.
WORK THIS DWG. WITH DWG. No. 131.

130

EXPANSION DAM - SUSP. Nº 3
BRIDGE OVER NORTHWESTERN P'WAY & 22ND ST.
DEPT OF HIGHWAYS, COMMONWEALTH OF KENTUCKY
JEFFERSON CTY., F.A.P. 264 (1)(2) 5456-5273-7681
CONTRACTOR: MATTINGLY BRIDGE CO.

NASHVILLE BRIDGE COMPANY
NASHVILLE, TENN.
BESSEMER PLANT

APPROVED FOR SHOP
KME 3/5/70 CHIEF DRAFTSMAN
CHIEF ENGINEER
REVISION NOTES
APPR. 3/5/70

HOLES: As NOTED
FIELD CONN. 2d
SHOP PAINT SEE GN1
FIELD

DRAWN BY: J.B. DATE 12-22-69
IN CHARGE: GATTI (TENSOR)
CHECKED BY: VM DATE 1/26/70
DATE PRINTED

BILLS MATERIAL No. 130
CONT. C6736
S. O. B-5728
DRAWING NO. 130

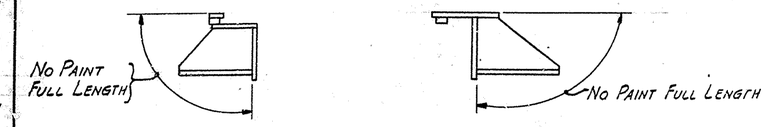

PAINT SKETCHES

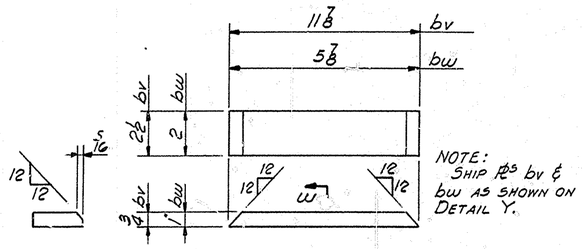

SECT. W
For Pl bw only

DETAIL OF Pls bv & bw

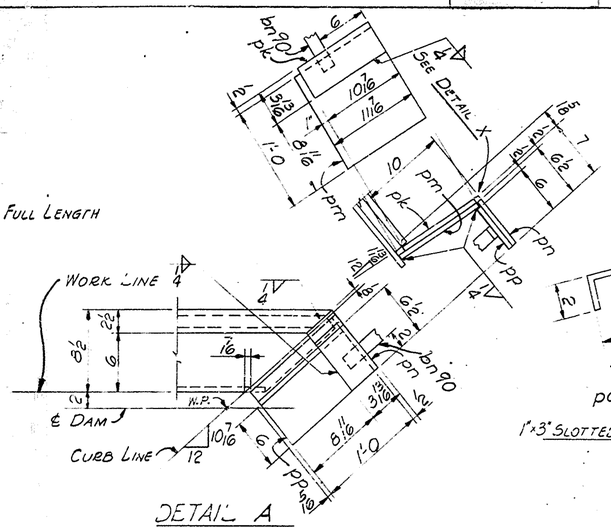

DETAIL A

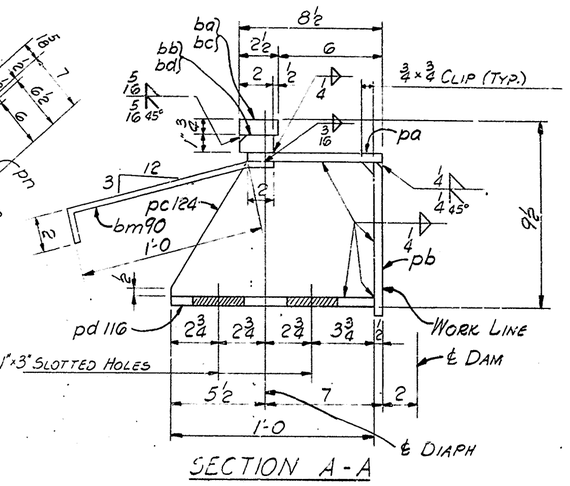

SECTION A-A

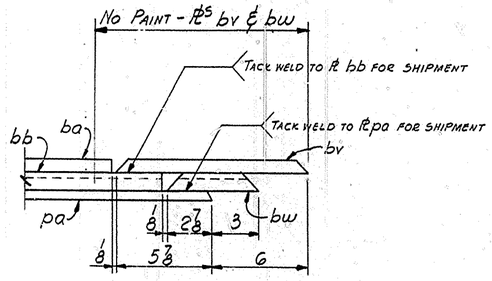

DETAIL Y

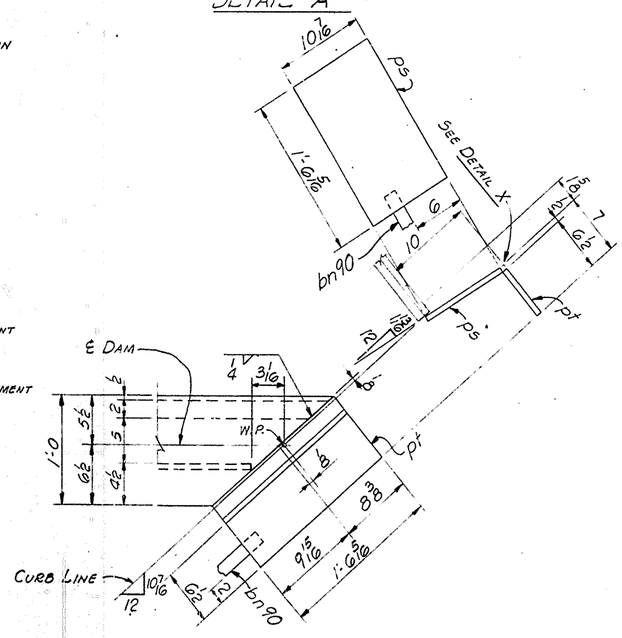

DETAIL B

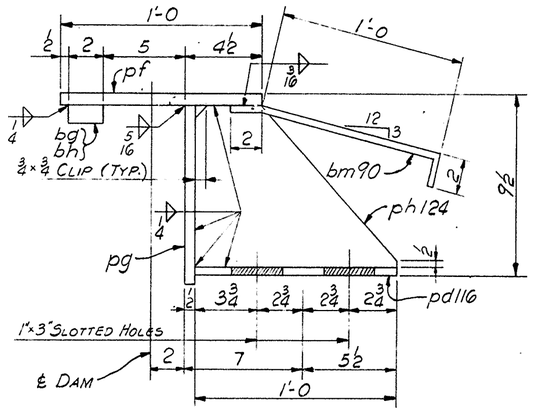

SECTION B-B

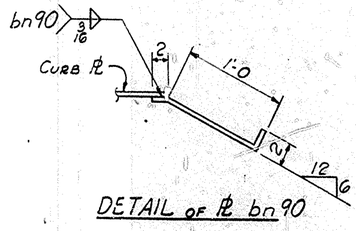

DETAIL OF Pl bn90

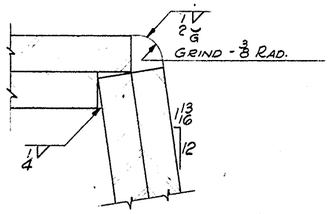

DETAIL X

NOTES:
ALL MATERIAL ASTM A36.
FOR GENERAL NOTES SEE DWG. GN1.
WORK THIS DWG. WITH DWG. 130.

NASHVILLE BRIDGE COMPANY

Shop Order No. B-5728 — Commonwealth of Kentucky, Dept. of Highways, Bridge over Northwestern Pkwy & 22nd St. Jefferson County — Bill No. 130

Work Order No. — Drawing No. 130 & 131

Contract No. CG756 — Fabrication Bessemer Plant

Item — Weights By — Checked By

Ship	Shipping Mark	Item Quant	Assembly Mark	Shape	Section	Finished Length Ft. In.	Ordered Length Ft. In.	P.O. No.	Item No.	Remarks	Specif. Weight	A.I.S.C. Weight
					MAT. ASTM A36							
One	130	ED 34			Expansion Dam							
		One	pa	Pl	8 × ½	34 2½						28/12
		One	pb	Pl	8½ × ½	33 7/16		3924	439			29/11
		8	Pls Reg.	Pl	6⅛ × ⅜	1 0			439			20/6.6
		8	Pls 7/16	Pl	8 × ⅜	1 0	32 cuts	3909	411	HRB	3907	48
		One	pk	Pl	3 13/16 × ½	0 10 7/16		5TK 3684	404			28/3
		One	pm	Pl	11 7/16 × ½	1 0			404			25/4
		One	pn	Pl	3 13/16 × ½	0 6½			404			22/4
		One	pp	Pl	6 × ½	1 0			404			25/4
		One	ba	Pl ⅜	2½ × ¾	16 9		3913	603			20/14
		One	bb	Pl ⅜	2 × 1	17 0			603			20/13
		One	bc	Pl ⅜	2½ × ¾	16 10½			603			27/16
		One	bd	Pl ⅜	2 × 1	16 9½			603			20/13
		18	bm90	Pl ⅜	1½ × ⅜	1 4		5TK 6886	606	BENT		29/26
		2	bn90	Pl ⅜	1½ × ⅜	1 4		5TK 6886	606	BENT		29/26
		One	bv	Pl ⅜	2½ × ¾	0 11⅛		3913	603			27/16
		One	bw	Pl ⅜	2 × 1	0 5⅞		3913	603			20/13
One	130	ED 38			Expansion Dam							
		One	pf	Pl	12 × ¾	33 7/16	25 cuts	3918	312			29/9
		One	pg	Pl	10 × ½	32 10½		5TK 3776	407			29/10
		8	Pls 7/16	Pl	8 × ⅜	1 0	32 cuts	3909	413	HRB	3907	29/13
		8	Pls 7/16	Pl	8 ⅜ × ⅜	1 0		3909	411			29/20
		One	ps	Pl	10 7/16 × ½	1 6 5/16		5TK 3686	404			25/2
		One	pt	Pl	6 ⅞ × ½	1 6 5/16		5TK 3686	404			25/5
		One	bg	Pl ⅜	2 × 1	16 9		3913	603			20/13
		One	bh	Pl ⅜	2 × 1	16 10½		3913	603			20/13
		19	bm90	Pl ⅜	1½ × ⅜	1 4		5TK 6886	606	BENT		29/26
		2	bn90	Pl ⅜	1½ × ⅜	1 4		5TK 6886	606	BENT		29/26

Sheet Total

140

EXPANSION DAM - SUSP. No 3
Bridge over Northwestern Pkwy & 22nd St.
Dept. of Highways, Commonwealth of Kentucky
Jefferson Cty. F.A.P. IG4-2(73)2; SPSL-2273-7181
Contractor: Mattingly Bridge Co.

NASHVILLE BRIDGE COMPANY
NASHVILLE, TENN.
BESSEMER PLANT

Approved for Shop — Chief Draftsman — Chief Engineer — Revision Notes

Scale: No. 10 — Drawn by J.L.B. Date 12-23-69 — In charge: GATTI (Tracing)
Field Check — Checked by Date 1/26/70
Shop Paint: See GN1 — Date Printed
Field

Bill Material No. 130 — Cont. CG756 — S.O. B-5728 — Drawing No. 131

B. K. ELLIOTT CO., PITT., PA. REORDER A-6973

BRIDGE

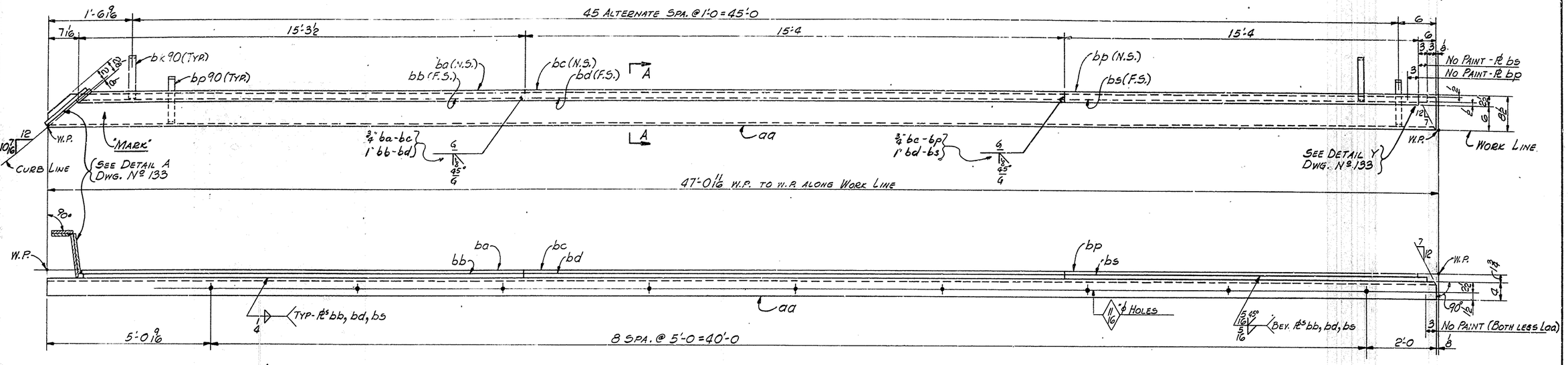

MAKE ONE EXPANSION DAM MARK 132EDB1

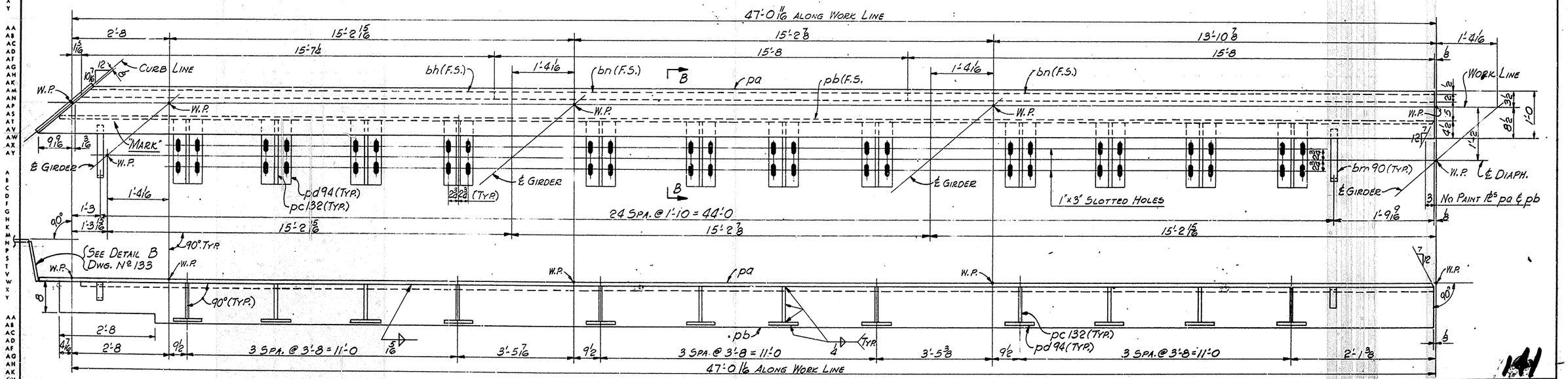

MAKE ONE EXPANSION DAM MARK 132EDB5

NOTES:
ALL MATERIA ASTM A36.
FOR GENERAL NOTES SEE DWG. GN1.
EXPANSION DAMS ARE TO BE ASSEMBLED IN THE SHOP IN THEIR RELATIVE FINAL POSITION AND INSPECTED FOR FIT.
WORK THIS DWG. WITH DWG. 133.

EXPANSION DAM - END BENT B
BRIDGE OVER NORTHWESTERN P'KWY & 22ND ST.
DEPT. OF HIGHWAYS, COMMONWEALTH OF KENTUCKY
JEFFERSON CTY., F.A.P. [G4-2(13)2-SPS6-8273-7L01]
CONTRACTOR: MATTINGLY BRIDGE CO

NASHVILLE BRIDGE COMPANY
NASHVILLE, TENN.
BESSEMER PLANT

APPROVED FOR SHOP
CHIEF DRAFTSMAN
CHIEF ENGINEER
REVISION NOTE: APPR. 3/5/70

HOLES: As NOTED
FIELD CONN.: ϕ
SHOP PAINT: SEE GN1
FIELD:

DRAWN BY: J.D. DATE: 1-10-70
IN CHARGE: GATTI (TENBOLT)
CHECKED BY: VM DATE: 4/26/70
DATE PRINTED:

BILLS MATERIAL NO. 132
CONT. C 6736
S.O. B-5728
DRAWING NO. 132

BRIDGE

D. K. ELLIOTT CO., PGH., PA. REORDER A-8573

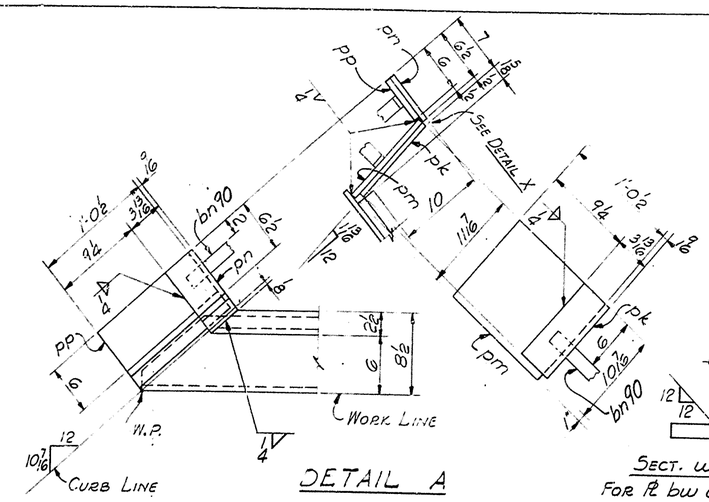

DETAIL A

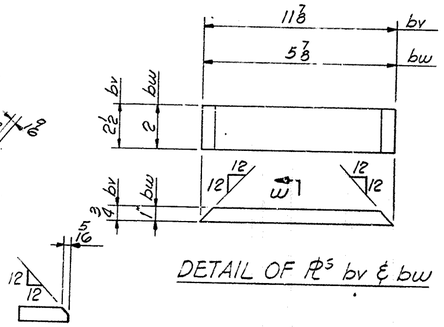

DETAIL OF PL's bv & bw

SECT. W
FOR PL bw ONLY

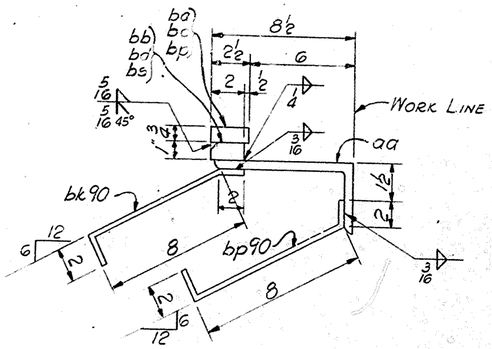

SECTION A-A

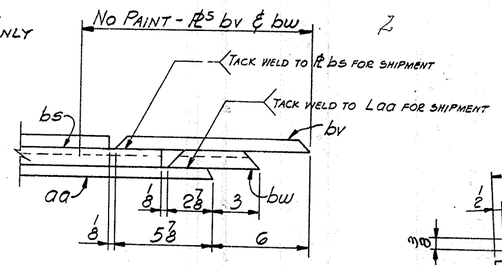

DETAIL Y

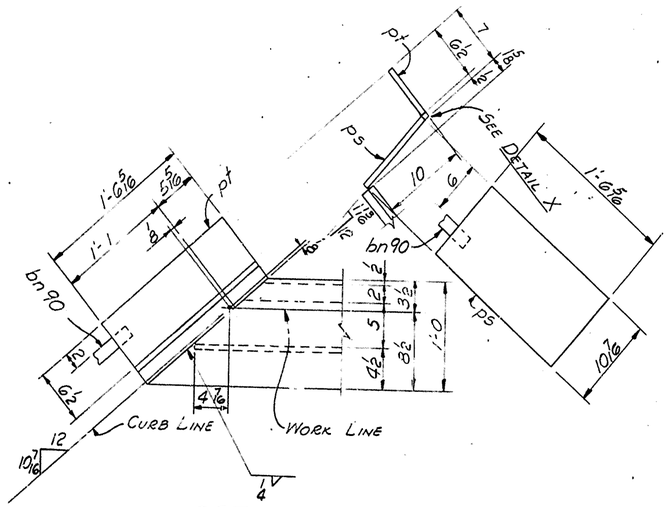

DETAIL B

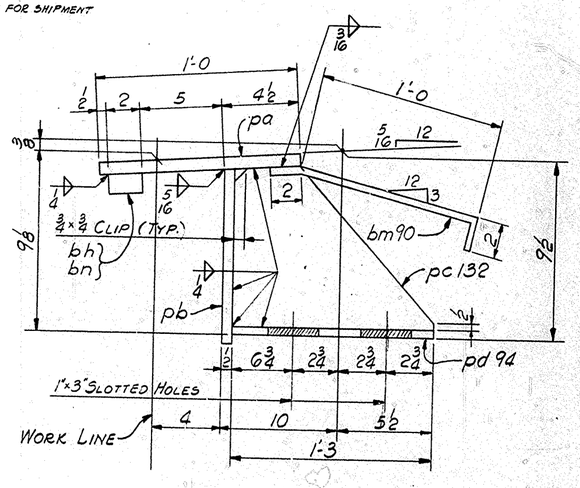

SECTION B-B

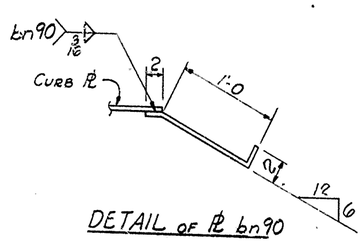

DETAIL OF PL bn90

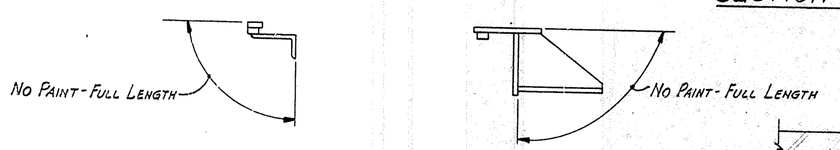

PAINT SKETCHES

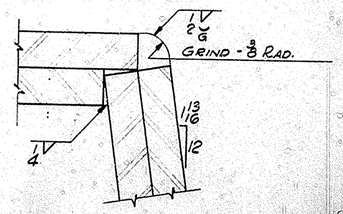

DETAIL X

NOTES:
ALL MATERIAL ASTM A36.
FOR GENERAL NOTES SEE DWG. GN1.
WORK THIS DWG. WITH DWG. 132.

NASHVILLE BRIDGE COMPANY

SHOP ORDER NO. B-5728
WORK ORDER NO.
CONTRACT NO. C673G
ITEM

COMMONWEALTH OF KENTUCKY, DEPT. OF HIGHWAYS, BRIDGE OVER NORTHWESTERN PKWY & 22ND ST. JEFFERSON COUNTY

BILL NO. 132
DRAWING NO. 132 & 133

FABRICATION BESSEMER PLANT

SHOP	SHIPPING MARK	ITEM QUANT.	ASSEMBLY MARK	FORMS	SECTION	FINISHED LENGTH FT. IN.	ORDERED LENGTH FT. IN.		WEIGHTS BY P.U. NO.	ITEM NO.	REMARKS	SPECIF. WEIGHT	A.I.S.C. WEIGHT
					MAT. ASTM A36								
One	132	ED B1			Expansion Dam								
		One	aa	L	8×4×1/2	47 9 1/16			57% 58/82	111			
		One	pk	PL	3 13/16×1/2	0 10 1/16			57% 58/80	404			
		One	pm	PL	11 1/16×1/2	1 0 1/2				404			
		One	pn	PL	3 13/16×1/2	0 6 1/2				404			
		One	pp	PL	6×1/2	1 0 1/2				404			
		One	ba	Bk/PL	2 1/2×3/8	15 3 1/2			39/13	603			
		One	bb	Bk/PL	2×1	15 2 15/16				603			
		One	bc	Bk/PL	2 1/2×3/8	15 3 3/8				603			
		One	bd	Bk/PL	2×1	15 3 3/8				603			
		One	bp	Bk/PL	2 1/2×3/8	15 4				603			
		One	bs	Bk/PL	2×1	15 7				603			
		23	bk90	Bk/PL	1 1/2×3/8	1 0			57% 58/86	604	BENT		
		23	bp90	Bk/PL	1 1/2×3/8	1 0				604	BENT		
		2	bn90	Bk/PL	1 1/2×3/8	1 4				604	BENT		
		One	bv	Bk/PL	2 1/2×3/8	0 11 7/8			39/13	603			
		One	bw	Bk/PL	2×1	0 5 7/8			39/13	603			
One	132	ED B5			Expansion Dam								
		One	pa	PL	12×3/4	47 10 1/2	13% CUT	GR PL	39/10	313			
		One	pc	PL	10×1/2	47 5			39/10	401			
		12	pb	PL	8 1/4×3/8	1 3			39/09	411			
		12	pd	PL	8×3/8	1 3	8% CUT	10 PL	39/09	413			
		One	ps	PL	10 7/16×1/2	1 6 3/8			57% 58/80	404			
		One	pt	PL	6 1/2×1/2	1 6 7/16			57% 58/80	404			
		One	bh	Bk/PL	2×1	15 7 1/4			39/13	603			
		2	bn	Bk/PL	2×1	15 8			39/13	603			
		25	bm90	Bk/PL	1 1/2×3/8	1 4			57% 58/86	604	BENT		
		2	bn90	Bk/PL	1 1/2×3/8	1 4			57% 58/86	604	BENT		

SHEET TOTAL

143

EXPANSION DAM - END BENT B
BRIDGE OVER NORTHWESTERN PKWY & 22ND ST.
DEPT. OF HIGHWAYS, COMMONWEALTH OF KENTUCKY
JEFFERSON CTY. F.A.P. 164-2(13)2-SP56-8213-7.061
CONTRACTOR: MATTINGLY BRIDGE CO.

NASHVILLE BRIDGE COMPANY
NASHVILLE, TENN.
BESSEMER PLANT

APPROVED FOR SHOP
CHIEF DRAFTSMAN
CHIEF ENGINEER
REVISION NOTES

DRAWN BY J.L.B. DATE 1-10-70
CHECKED BY J.M. DATE 1/26/70
DATE PRINTED
HOLES As noted
FIELD CONN.
SHOP PAINT } See GN1.
FIELD

BILL MATERIAL NO. 132
CONT. C673G
S.O. B-5728
DRAWING NO. 133

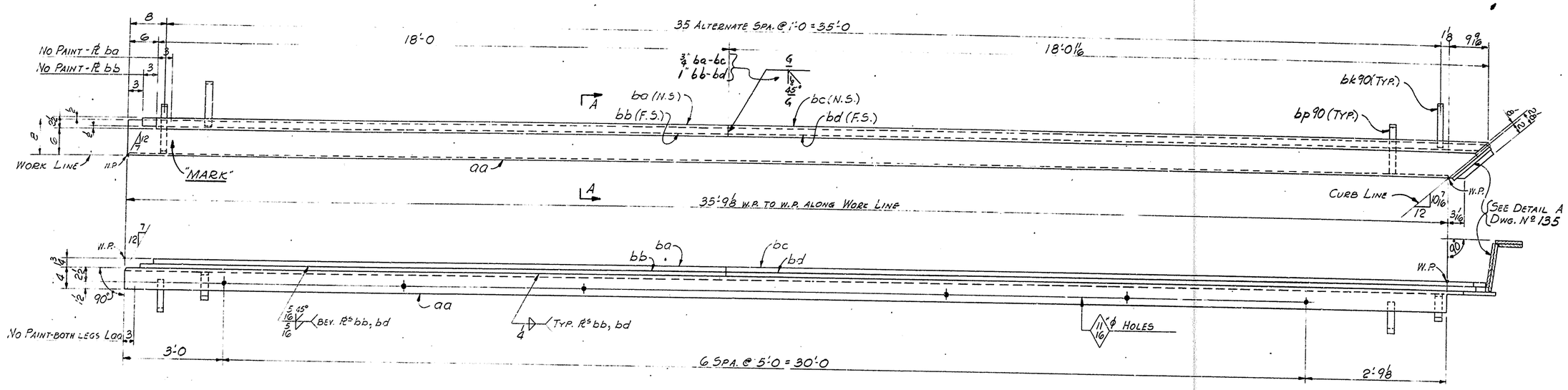

MAKE ONE EXPANSION DAM MARK 134EDB2

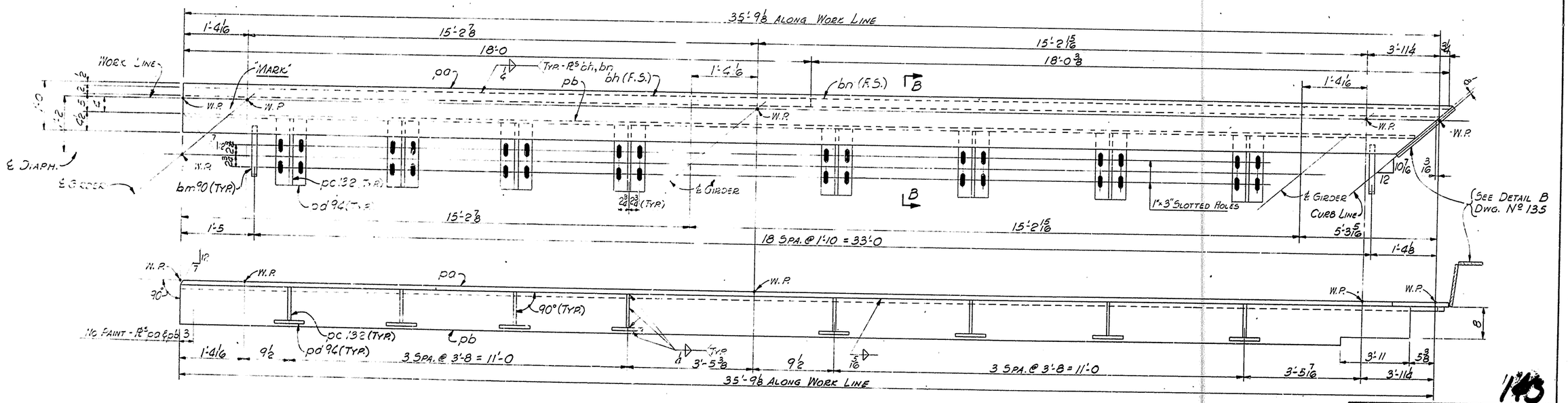

MAKE ONE EXPANSION DAM MARK 134EDB6

NOTES:
ALL MATERIAL ASTM A36.
FOR GENERAL NOTES SEE DWG. GN1
EXPANSION DAMS ARE TO BE ASSEMBLED IN THE SHOP IN THEIR RELATIVE FINAL POSITION AND INSPECTED FOR FIT.
WORK THIS DWG. WITH DWG. 135.

143

EXPANSION DAM - END BENT B
BRIDGE OVER NORTHWESTERN PKWY & 22ND ST.
DEPT. OF HIGHWAYS, COMMONWEALTH OF KENTUCKY
JEFFERSON-CTY., F.A.P. IGA-2(73)2-5956-8273-7L81
CONTRACTOR: MATTINGLY BRIDGE CO.

NASHVILLE BRIDGE COMPANY
NASHVILLE, TENN.
BESSEMER PLANT

APPROVED FOR SHOP	
HWF 1/6/70 CHIEF DRAFTSMAN	
1/26/70 CHIEF ENGINEER	
REVISION NOTE: AAK. 3/5/70	
HOLES	As NOTED
FIELD CONN.	ϕ
SHOP PAINT	SEE GN1
FIELD	
DRAWN BY	J.B. DATE 1-9-70
IN CHARGE	GATTI (TENSOR)
CHECKED BY	V.M. DATE 1/26/70
DATE PRINTED	
BILL OF MATERIAL NO.	134
CONT.	C6736
S.O.	B-5728
DRAWING NO.	134

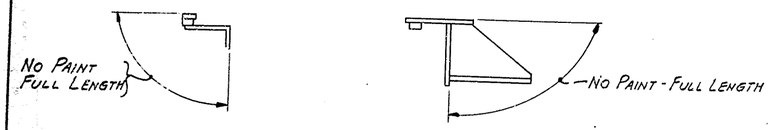

PAINT SKETCHES

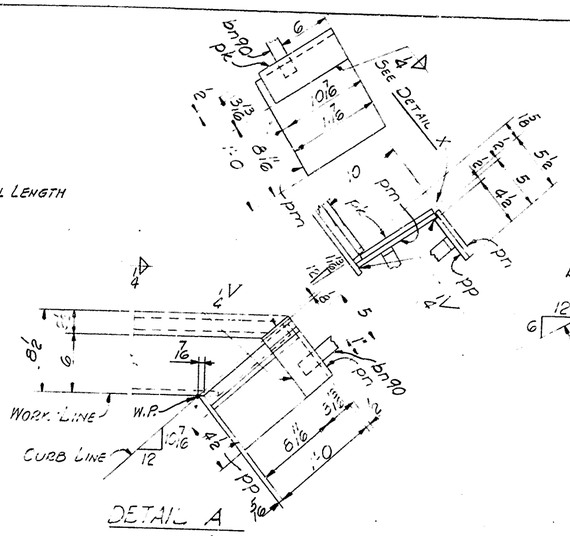

DETAIL A

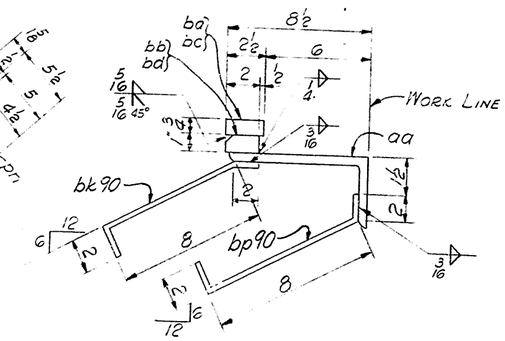

SECTION A-A

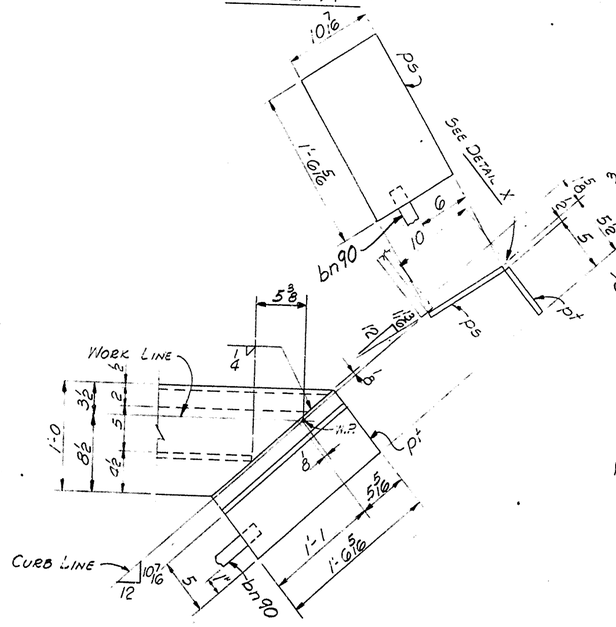

DETAIL B

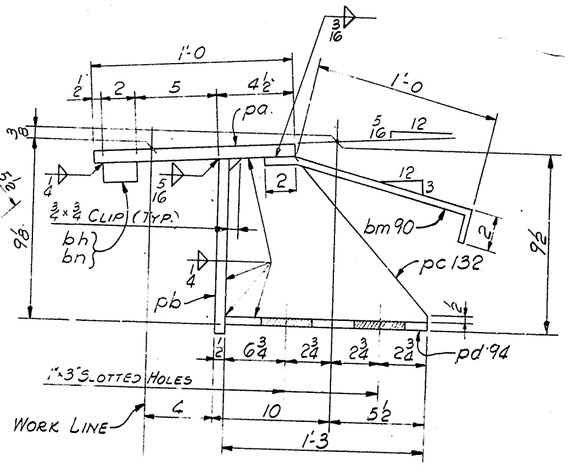

SECTION B-B

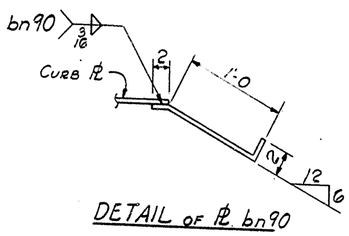

DETAIL OF ℄ bn90

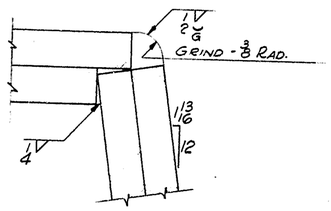

DETAIL X

NOTES:
ALL MATERIAL ASTM A36.
FOR GENERAL NOTES SEE DWG. GN1.
WORK THIS DWG. WITH DWG. 134.

NASHVILLE BRIDGE COMPANY

SHOP ORDER NO. B-5728
WORK ORDER NO.
CONTRACT NO. CG736
COMMONWEALTH OF KENTUCKY, DEPT. OF HIGHWAYS, BRIDGE OVER NORTHWESTERN PKWY & 22ND ST. JEFFERSON COUNTY
BILL NO. 134
DRAWING NO. 194 & 195
FABRICATION BESSEMER PLANT

ITEM	SHIP	SHIPPING MARK	ITEM QUANT	ASSEMBLY MARK	SHAPE	SECTION	FINISHED LENGTH FT-IN	ORDERED LENGTH FT-IN	WEIGHTS BY P.S. NO.	ITEM NO.	REMARKS	SPECIF WEIGHT	AISC WEIGHT
						MAT ASTM A36							
One	134	EDB2				EXPANSION DAM							
			One	aa	L	8x4x1/2	36 7 3/8		STK 3402	115			9 11/16
			One	pk	℄	3 13/16x1/2	0 10 1/16		STK 3680	404			2 5/32
			One	pm	℄	11 1/16x1/2	1 0			404			3 3/16
			One	pn	℄	3 13/16x1/2	0 5			404			2 1/16
			One	pp	℄	4 1/2x1/2	1 0			404			2 3/32
			One	ba	3/8 x 3/8	2 1/2x3/8	18 0		3913	603			2 11/16
			One	bb	3/8 x 3/8	2x1	18 3			603			2 5/16
			One	bc	3/8 x 3/8	2 1/2x3/8	18 0 3/16			603			5 11/16
			One	bd	3/8 x 3/8	2x1	18 0			603			5 5/16
			18	bk90	3/8 x 3/8	1 1/2x3/8	1 0		STK 686	603	BENT		3 5/16
			18	bp90	3/8 x 3/8	1 1/2x3/8	1 0			603	BENT		3 5/16
			2	bn90	3/8 x 3/8	1 1/2x3/8	1 4			603	BENT		2 7/16
One	134	EDB6				EXPANSION DAM							
			One	pa	℄	12x3/4	36 0 9/16	CUTS 5@1/2	3910	315			6 1/10
			One	pb	℄	10x1/2	35 3 3/4		3909	400			5 1/32
			8	pc	℄	8 1/4x3/8	1 3		3909	411			2 5/32
			8	pd	℄	8x3/8	1 3	8@ CUTS HEB	3909	413			2 1/32
			One	pe	℄	10 7/16x1/2	1 6 7/16		STK 3680	404			1 1/32
			One	pf	℄	5x1/2	1 6 7/16		STK 3680	404			1 1/32
			One	bh	3/8 x 3/8	2x1	18 0		3913	603			2 1/4
			One	bn	3/8 x 3/8	2x1	18 0 3/8		3913	603			2 1/4
			19	bm90	3/8 x 3/8	1 1/2x3/8	1 4		STK 686	603	BENT		2 3/4
			2	bn90	3/8 x 3/8	1 1/2x3/8	1 4		STK 686	603	BENT		2 3/4

SHEET TOTAL

EXPANSION DAM - END BENT B
BRIDGE OVER NORTHWESTERN PKWY & 22ND ST.
DEPT. OF HIGHWAYS, COMMONWEALTH OF KENTUCKY
JEFFERSON CTY. F.A.P. IG4-2(78)2-5P56-8073-7LN
CONTRACTOR: MATTINGLY BRIDGE CO.

NASHVILLE BRIDGE COMPANY
NASHVILLE, TENN.
BESSEMER PLANT

APPROVED FOR SHOP
NWF 7/6/70 CHIEF DRAFTSMAN
JAC 7/8/70 CHIEF ENGINEER
REVISION NOTES

HOLES AS NOTED
FIELD CONN. } SEE GN1
SHOP PAINT }
FIELD
BILLED MATERIAL NO.

DRAWN BY J.B. DATE 1-9-70
IN CHARGE OF DETAILING
CHECKED BY VM DATE 1/26/70
DATE PRINTED

B. E. ELLIOTT CO. PITT., PA. REORDER A-2075

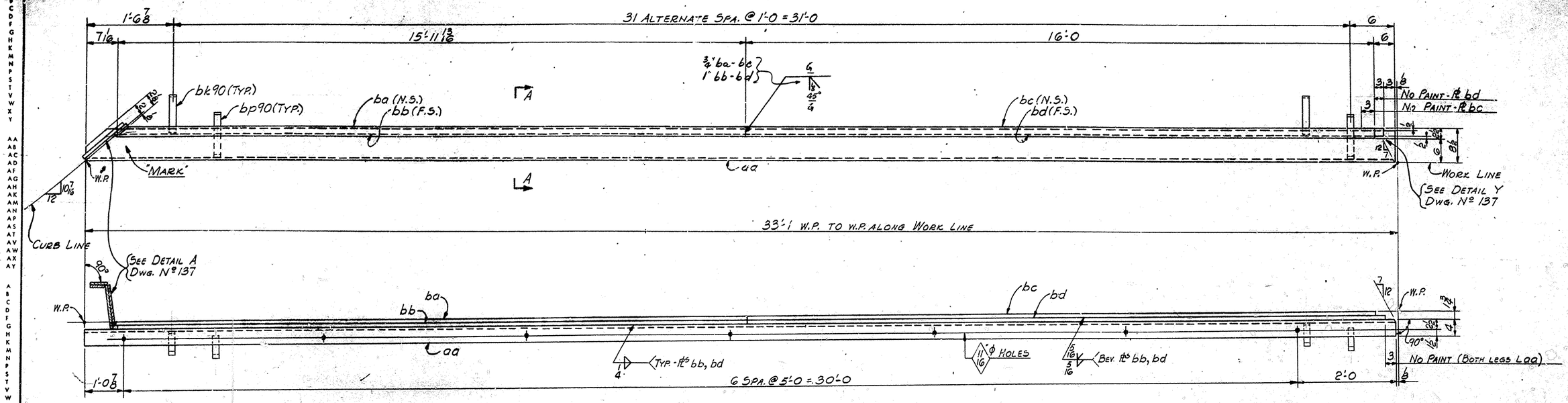

MAKE ONE EXPANSION DAM MARK 136EDB3

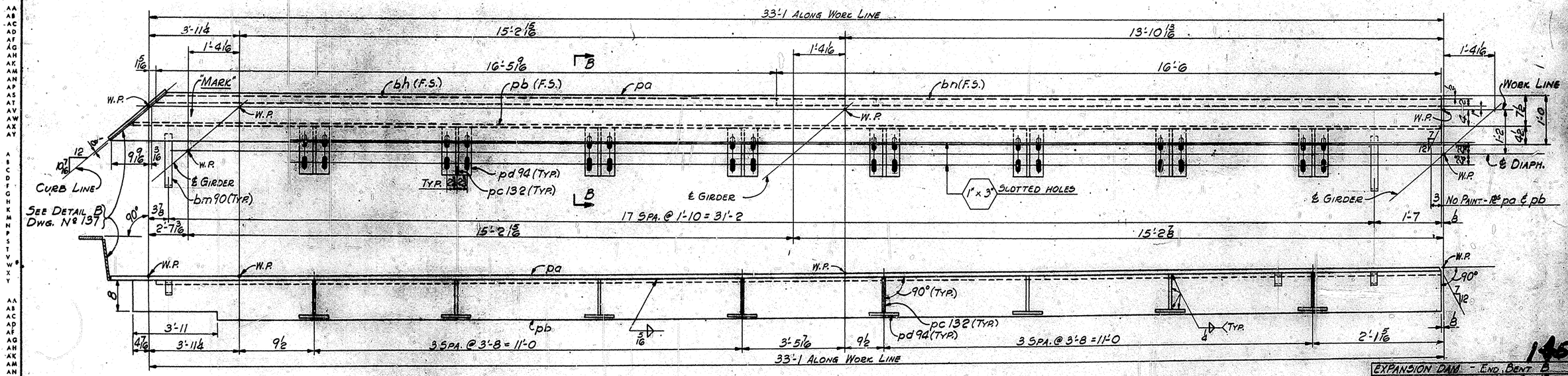

MAKE ONE EXPANSION DAM MARK 136EDB7

NOTES:
ALL MATERIAL ASTM A36.
FOR GENERAL NOTES SEE DWG. No. GN1.
EXPANSION DAMS ARE TO BE ASSEMBLED IN THE SHOP IN THEIR RELATIVE FINAL POSITION AND INSPECTED FOR FIT.
WORK THIS DWG. WITH DWG. No. 137.

145

EXPANSION DAM - END BENT B
BRIDGE OVER NORTHWESTERN PKWY. & 22ND ST.
DEPT. OF HIGHWAYS, COMMONWEALTH OF KENTUCKY
JEFFERSON CTY., F.A.P. X(A-2(13)X-SPSG-8273-7L-81
CONTRACTOR: MATTINGLY BRIDGE CO.

NASHVILLE BRIDGE COMPANY
NASHVILLE, TENN.

APPROVED FOR SHOP	
AMF 3/6/70	CHIEF DRAFTSMAN
JAC 3/6/70	CHIEF ENGINEER
REVISION NOTES	
APPR. 3/5/70	

WELDS	
HOLES	2ϕ NO NOTES
FIELD CLEAN	
SHOP PAINT	SEE GN1
FIELD	
CHECKED BY	
DATE PRINTED	
BILL'S MATERIAL NO.	136
	136

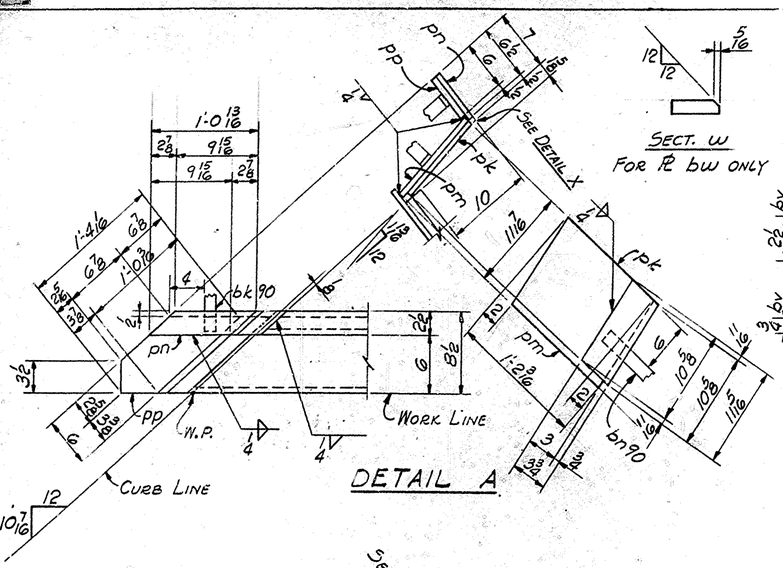

DETAIL A

SECT. w
FOR PL bw ONLY

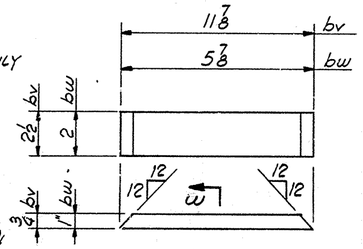

DETAIL OF PLS bv & bw

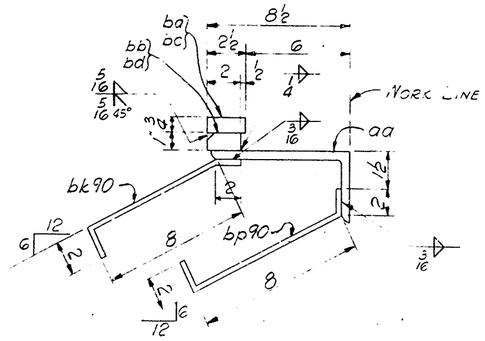

SECTION A-A

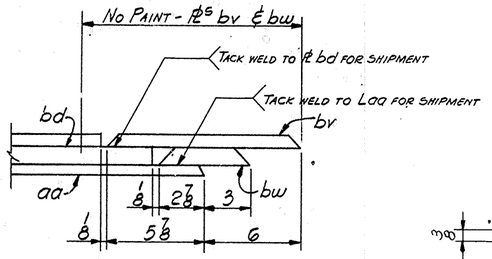

DETAIL Y

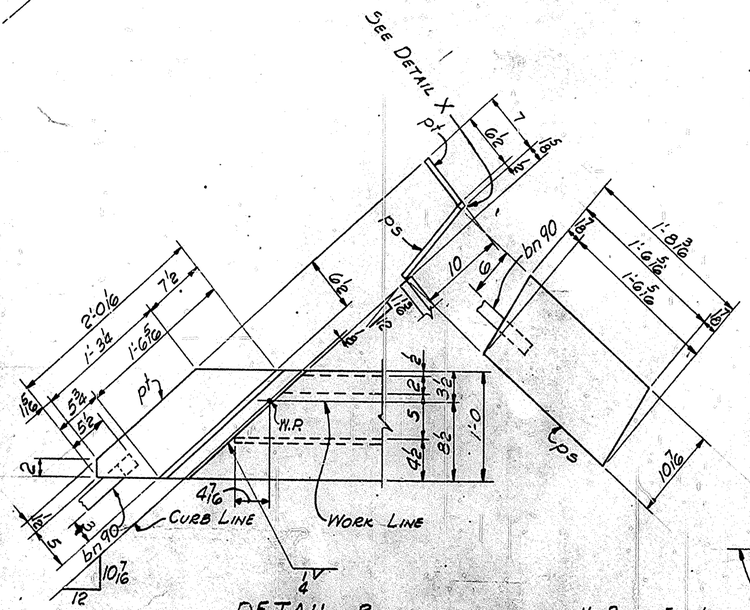

DETAIL B

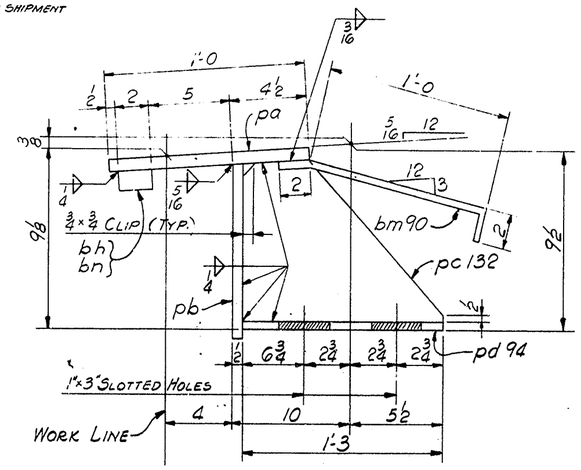

SECTION B-B

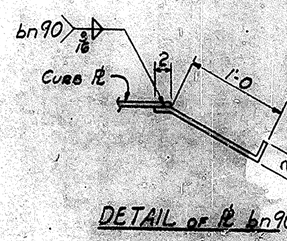

DETAIL OF PL bn 90

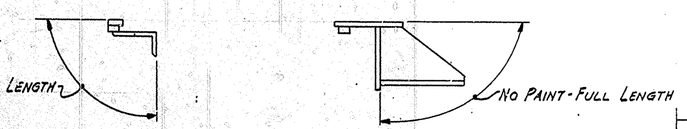

PAINT SKETCHES

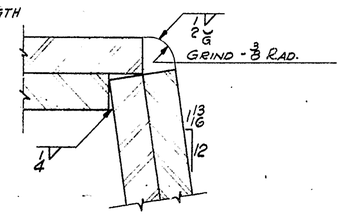

DETAIL X

NOTES:
ALL MATERIAL ASTM A36.
FOR GENERAL NOTES SEE DWG. GN1.
WORK THIS DWG. WITH DWG. 136.

NASHVILLE BRIDGE COMPANY

SHOP ORDER NO. B-5728
WORK ORDER NO.
CONTRACT NO. C G736
COMMONWEALTH OF KENTUCKY, DEPT. OF HIGHWAYS, BRIDGE OVER NORTHWESTERN PKWY & 22ND ST. JEFFERSON COUNTY
FABRICATION BESSEMER PLANT
BILL NO. 136
DRAWING NO. 136 & 137
WEIGHTS BY
CHECKED BY

Ship	Sh. Pc. Mark	Item Qnt.	Assembly Mark	Qnt.	Section	Finished Length Ft. In.	Uncorrected Length Ft. In.	P.C. No.	Item No.	Remarks	Specif. Reform	Actual Weight
					MAT. ASTM A36							
One	136	ED B3			EXPANSION DAM							
		One	aa	L	8 x 4 x 1/2	33	0 1/2		STK 3682	117		2/18
		One	pk	PL	3 1/2 x 1/2	0	11 7/16		STK 3680	404		2/25/18
		One	pm	PL	11 7/16 x 1/2	1	2 3/16			404		2/25/18
		One	pn	PL	2 1/2 x 1/2	1	0 3/16			404		2/25/18
		One	pp	PL	6 x 1/2	1	4 1/16			404		2/25/18
		One	ba	Bar	2 1/2 x 3/4	15	11 1/16		3913	604		2/1/22
		One	bb	Bar	2 x 1	15	11 1/16			603		2/1/21
		One	bc	Bar	2 1/2 x 3/4	16	0			604		2/1/22
		One	bd	Bar	2 x 1	16	3			603		2/1/21
		17	bk 90	Bar	1 1/2 x 3/8	1	0		STK 686	606	BENT	2/15/18
		16	bp 90	Bar	1 1/2 x 3/8	1	0			606	BENT	2/15/18
		One	bn 90	Bar	1 1/2 x 3/8	1	4			606	BENT	2/15/18
		One	bv	Bar	2 1/2 x 3/4	0	11 1/8		3913	604		2/1/22
		One	bw	Bar	2 x 1	0	5 1/8		3913	603		2/1/21
One	136	ED B7			EXPANSION DAM							
		One	pa	PL	12 x 3/4	33	10 7/16	85-2x85-6 Cl.B 7	3910	312		2/17
		One	pb	PL	10 x 1/2	33	5 1/16		STK 3772	407		2/20
		8	PL 8 1/2	PL	8 1/2 x 3/8	1	3		3909	411		2/1/18
		8	PL 8 1/2	PL	8 x 3/8	1	3	82 Curve 0 @ 8	3909	413		2/1/18
		One	ps	PL	10 1/2 x 1/2	1	8 3/16		STK 3680	404		2/25/18
		One	pt	PL	6 1/2 x 1/2	2	0 1/16		STK 3680	404		2/25/18
		One	bh	Bar	2 x 1	16	5 1/16		3913	603		2/1/21
		One	bn	Bar	2 x 1	16	6		3913	603		2/1/21
		2	bn 90	Bar	1 1/2 x 3/8	1	4		STK 686	606	BENT	2/15/18
		18	bm 90	Bar	1 1/2 x 3/8	1	4		STK 686	606	BENT	2/15/18

SHEET TOTAL

136

EXPANSION DAM - END BENT B
BRIDGE OVER NORTHWESTERN PKWY & 22ND ST.
DEPT. OF HIGHWAYS, COMMONWEALTH OF KENTUCKY
JEFFERSON CTY. F.A.P. 164-2(79) 2-5256-8273-7L6
CONTRACTOR: MATTINGLY BRIDGE CO.

NASHVILLE BRIDGE COMPANY
NASHVILLE, TENN.
BESSEMER, PLANT

APPROVED FOR SHOP
WMF 7/6/78 Chief Draftsman
JHC 8/8/78 Chief Engineer
Revision Notes

Holes A3 as noted
Field Conn. } See GN1
Shop Paint }
Field
Drawn by J.B. Date 1-7-78
Checked by VN Date 3/26/78
Date Printed

Bills Material No. 136
CONT. C G736
S. O. B-5728
137

BRIDGE

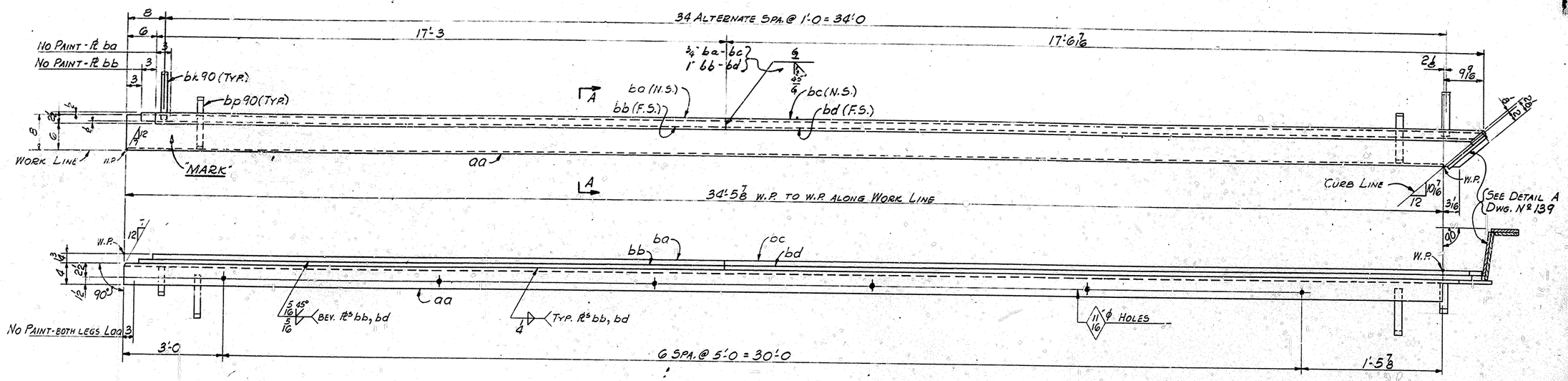

MAKE ONE EXPANSION DAM MARK 138EDB4

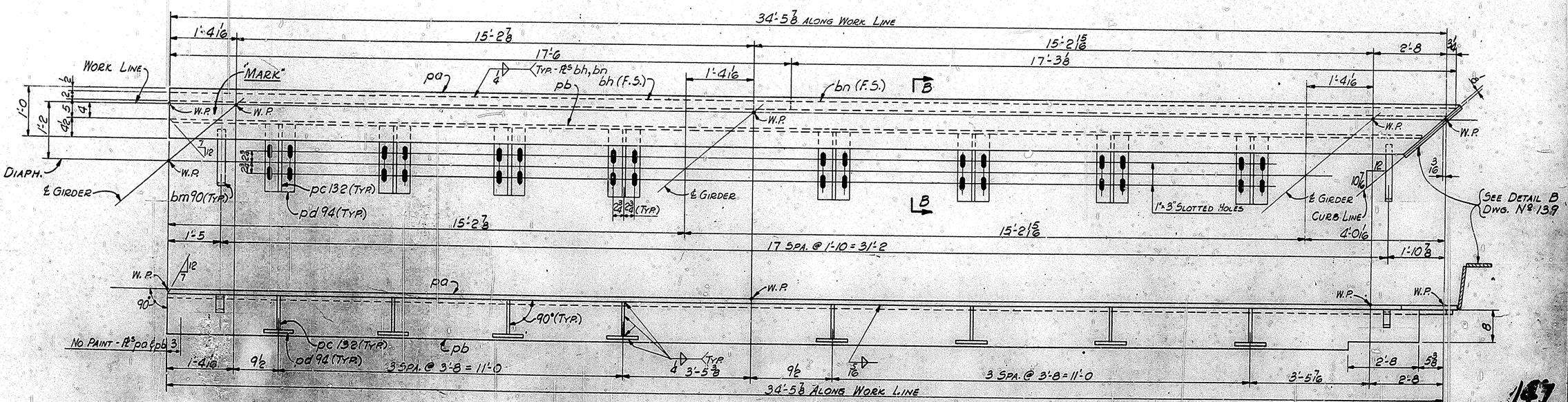

MAKE ONE EXPANSION DAM MARK 138EDB8

NOTES:
ALL MATERIAL ASTM A36.
FOR GENERAL NOTES SEE DWG. GN1
EXPANSION DAMS ARE TO BE ASSEMBLED IN THE SHOP IN THEIR RELATIVE FINAL POSITION AND INSPECTED FOR FIT.
WORK THIS DWG. WITH DWG. 139.

147

EXPANSION DAM - END BENT B
BRIDGE OVER NORTHWESTERN HWY & 22ND ST.
DEPT. OF HIGHWAYS, COMMONWEALTH OF KENTUCKY
JEFFERSON CT., F.A.P. 142-2(70)2-5P36-8273-7L&1
CONTRACTOR: MATTINGLY BRIDGE CO.

NASHVILLE BRIDGE COMPANY
NASHVILLE, TENN. — BESSEMER PLANT

APPROVED FOR SHOP
CHIEF DRAFTSMAN
CHIEF ENGINEER
REVISION NOTES
APPR. 2/5/70

DRAWN BY J.B. DATE 1-8-70
SCALE 1/2
FIELD CONN. ϕ
SHOP PAINT } SEE GN1
FIELD
CHECKED BY J.M. DATE 1/26/70
DATE PRINTED

BILLS MATERIAL NO. 138
CONT. CG736
S.O. B5728
DRAWING NO. 138

PAINT SKETCHES

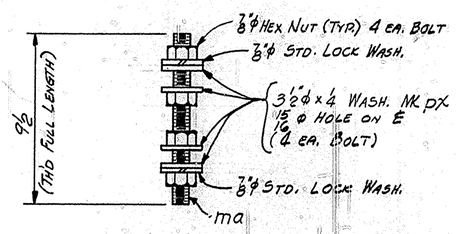

MAKE - 1008 - BOLT ASSEMBLIES MARK 139M1

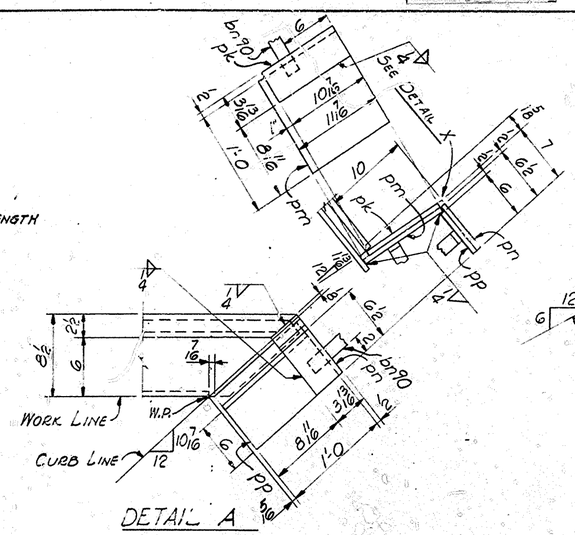

DETAIL A

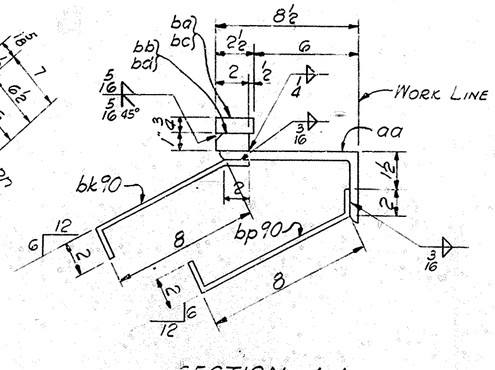

SECTION A-A

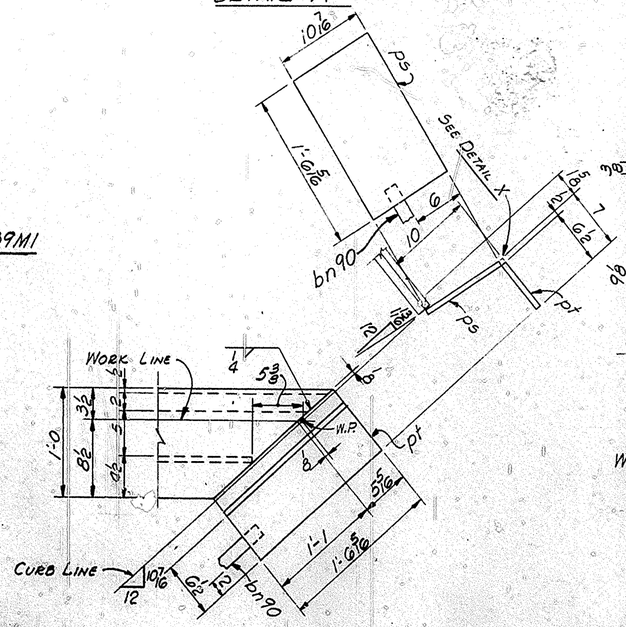

DETAIL B

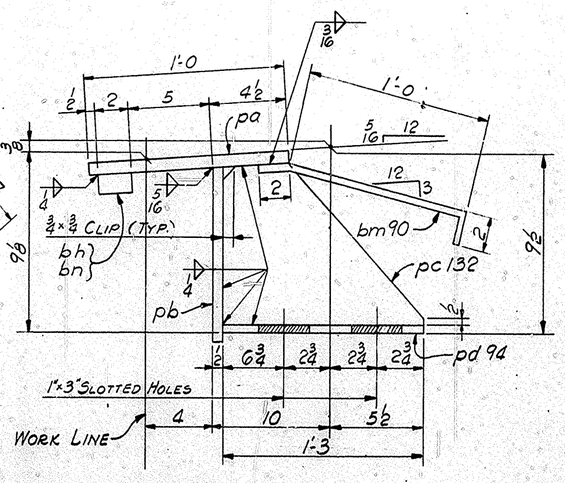

SECTION B-B

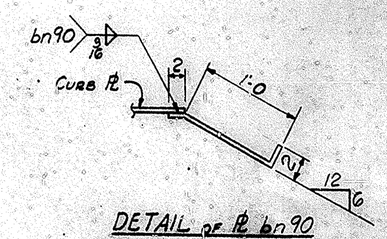

DETAIL OF ℄ bn90

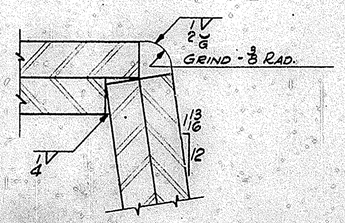

DETAIL X

NOTES:
ALL MATERIAL ASTM A36.
FOR GENERAL NOTES SEE DWG. GN1.
WORK THIS DWG. WITH DWG. 138

NASHVILLE BRIDGE COMPANY

SHOP ORDER NO. B-5728
WORK ORDER NO.
CONTRACT NO. C 6736
COMMONWEALTH OF KENTUCKY, DEPT. OF HIGHWAYS, BRIDGE OVER NORTHWESTERN PKWY & 22ND ST. JEFFERSON COUNTY
FABRICATION BESSEMER PLANT
BILL NO. 138
DRAWING NO. 138 & 139
ITEM
WEIGHTS BY
CHECKED BY

SHIP	SHIPPING MARK	ITEM QUANT.	ASSEMBLY MARK		SECTION	FINISHED LENGTH FT.	FINISHED LENGTH IN.	ORDERED LENGTH FT.	ORDERED LENGTH IN.	P.O. NO.	ITEM NO.	REMARKS	SPECIF. WEIGHT	A.I.S.C. WEIGHT
					MAT. ASTM A36									
One	138		EDB4		EXPANSION DAM									
		One	aa	L	8x4x1/2	35	4 1/4			STK 3482	116			2/65
		One	pk	PL	3 13/16x1/2	0	10 1/16			STK 3680	004			2/13
		One	pm	PL	11 1/16x1/2	1	0				004			2/4
		One	pn	PL	3 13/16x1/2	0	6 1/2				004			2/6
		One	pp	PL	2x1/2	1	0				004			2/4
		One	ba	Bar	2 1/2x3/8	17	3			3913	603			2/17
		One	bb	Bar	2x1	17	6				603			2/60
		One	bc	Bar	2 1/2x3/4	17	6 5/16				603			2/27
		One	bd	Bar	2x1	17	5 3/4				603			2/60
		18	bk90	Bar	1/2x3/8	1	0			STK 6862	604	BENT		2/35
		17	bp90	Bar	1/2x3/8	1	0				604	BENT		2/35
		2	bn90	Bar	1/2x3/8	1	4				604	BENT		2/34
One	138		EDB8		EXPANSION DAM									
		One	pa	PL	12x3/4	34	9 1/16	CUTS EL 1/2		3410	315			2/66
		One	pb	PL	10x1/2	34	0			3409	402			2/27
		8	pc 132	PL	6 1/2x3/8	1	3			3409	411			2/32
		8	pd 94	PL	8x3/8	1	3			3409	413			2/61
		One	ps	PL	10 1/16x1/2	1	6 1/2			STK 3680	004			2/6
		One	pt	PL	6 1/2x1/2	1	6 1/16			STK 3680	004			2/5
		One	bh	Bar	2x1	17	6			3913	603			2/60
		One	bn	Bar	2x1	17	3 1/2			3913	603			2/60
		18	bm90	Bar	1/2x3/8	1	4			STK 6862	604	BENT		2/34
		2	bn90	Bar	1/2x3/8	1	4			STK 6862	604	BENT		2/34
1008	139M1				BOLT ASSEMBLIES									
		1008	ma	Bar	7/8φ Bolt	0	9 1/2			STK 3968	612	THD FULL LENGTH MAT. ASTM A37		2/5 1/2
		2016		Bar	7/8φ Std. Lock Wash					STK				2/3
		4032	px	PL	3 1/2"φ x 1/4	0	3			STK 3470	600			2/12
		4032			7/8"φ Hex. Nut					R 28619 28641	805	MAT. ASTM A307 GR. A		2/11

SHEET TOTAL

EXPANSION DAM - END BENT B
BRIDGE OVER NORTHWESTERN PKWY. & 22ND ST.
DEPT. OF HIGHWAYS, COMMONWEALTH OF KENTUCKY
JEFFERSON CTY. F.A.P. NO. BR-2728P-3756-4173-7181
CONTRACTOR: MATHIASEY BRIDGE CO.

NASHVILLE BRIDGE COMPANY
NASHVILLE, TENN.
BESSEMER PLANT

APPROVED FOR SHOP
Chief Draftsman
Chief Engineer
Revision Notes

Hole As Noted
Field Conn. } See GN1
Shop Paint }
Field
Checked By
Date Checked
Bills Material No. 138
CONT. C 6736
S.O. B-5728
139

NASHVILLE BRIDGE COMPANY

SHOP ORDER NO. B5725 | WORK ORDER NO. | CONTRACT NO. C6736 | ITEM

COMMONWEALTH OF KENTUCKY DEPT. OF HIGHWAYS

BRIDGE OVER NORTH WESTERN PARKWAY & 22ND ST. JEFFERSON COUNTY

FABRICATION BESSEMER PLANT

BILL NO. 110 | DRAWING NO. 110 & 140

WEIGHTS BY | CHECKED BY

Bill No.	Shipping Mark	Sh. No.	Assembly Mark	Quantity	Section	Finished Length	Ordered Length	Item No.	Remarks	Specif. Weight	A.I.S.C. Weight
					MATERIAL ASTM-A36 (U.N.)						
ONE 110K5					GIRDER						
			1	pa	PL 61 3/16 × 3/8	37 11	61½ × 38¼	3908	424		
			1	pb	PL 61 3/16 × 3/8	38 7 1/16	61½ × 38¼	3908	423		
			1	pc	PL 25 × 1	5 0		3910	306	PL 61 × 3/16 MATCH CUT 1 EA. PC & PD76	
			1	pd	PL 12 × 3/8	78 7 1/16	73½ × 78 10 CUTS 6	3910	318		
			1	pf	PL 12 × 1/4	54 11 3/8		3910	230		
			1	pg	PL 12 × 5/8	22 1/16	61 CUTS 5 @ 12	3910	321		
			2	pf100	PL 13 × 3/8	4 10		STK 3485	408		
			1	pg100	PL 10 × 3/8	2 1		STK 3740	410		
			4	ph100	PL 4 × 3/8	2 1		3905	605		
			1	pk100	PL 12 × 3/8	2 1		STK 3740	410		
			27	pk18	PL 4 × 3/8	4 11 5/16		3905	605 (FIE)		
			6	pm18	PL 4 × 3/8	4 11 5/16					
			1	pn18	PL 4 × 3/8	4 11 5/16					
			1	pf21	PL 4 × 3/8	4 11 5/16		3905	605 (FIE)		
			2	ph	PL 5½ × 1½	5 0		3910	223 (MIE)(FIE)		
			2	pw98	PL 11 × 3/8	1 3		STK 3372	438 (BENT)		
			2	pn8	PL 4 × 3/8	1 6½		3905	605		
			2	pa075	PL 11 × ½	0 11		STK 3680	405		
			1	pv15	PL 7 × 3/4	1 7		STK 2674	316		
			1	fa046	PL 7 × ½	0 10		3910	401		
			1	fa	PL 10 × 3/8	1 0 3/8		STK 3740	410		
			268		3/4 ϕ STUDS	0 4		27150	301	AUTO END WELDED	
			10		7/8 ϕ BOLTS	0 24		24661	202 (A325)	HEX HD HEX NUT	
			6		7/8 ϕ BOLTS	0 3¼			206 (A325)	HEX HD HEX NUT	
			16		HARD WASHERS FOR 7/8 ϕ BOLTS			24661	203 (A325)		
			1	1SP4	SOLE PL				DET. ON DWG. 1		

SHEET TOTAL

NASHVILLE BRIDGE COMPANY

SHOP ORDER NO. B5725 | WORK ORDER NO. | CONTRACT NO. C6736 | ITEM

COMMONWEALTH OF KENTUCKY DEPT. OF HIGHWAYS

BRIDGE OVER NORTH WESTERN PARKWAY & 22ND ST. JEFFERSON CO.

FABRICATION BESSEMER PLANT

BILL NO. 111 | DRAWING NO. 111 & 140

WEIGHTS BY | CHECKED BY

Bill No.	Shipping Mark	Sh. No.	Assembly Mark	Quantity	Section	Finished Length	Ordered Length	Item No.	Remarks	Specif. Weight	A.I.S.C. Weight	
					MATERIAL ASTM-A36							
ONE 111L5					GIRDER							
			1	pa	PL 62 1/4 × 3/8	43 10 3/8	62½ × 44 7/8	3908	415			7/33
			1	pb	PL 62 1/4 × 3/8	44 7/8	62½ × 44¼	3908	414			7/34
			1	pc	PL 25 × 1	5 0		3910	306	PL 61 × 3/16 MATCH CUT 1 EA PC & PD77		7/2
			1	pd	PL 12 × 7/16	68 11 3/8	73½ × 69 5/8 CUTS 6	3910	331			10/7
			1	pf	PL 12 × 1 3/4	68 11 3/8		3914	216			10/9
			1	pg	PL 12 × 5/8	20 1/8	61 CUTS 5 @ 12	3910	321			10/8
			1	ph	PL 12 × 5/8	21 7 3/8		3910	321			11/7
			2	pf100	PL 13 × 3/8	4 10		STK 3485	408			10/18
			1	pg100	PL 10 × 3/8	2 1		STK 3740	410			11/17
			4	ph100	PL 4 × 3/8	2 1		3905	605			11/18
			1	pk100	PL 12 × 3/8	2 1		STK 3740	410			11/20
			17	ph18	PL 4 × 3/8	4 11 5/16		3905	605 (FIE)			11/19
			3	pm18	PL 4 × 3/8	4 11 5/16			(FIE)			11/16
			1	pn18	PL 4 × 3/8	4 11 5/16			(FIE)			11/16
			2	pk	PL 5½ × 1 1/8	5 0		3910	219 (MIE)(FIE)			11/16
			8	pm	PL 4 × 3/8	20 0		3905	605			11/5
			2	pn	PL 4 × 3/8	3 2 1/8						11/6
			2	pp	PL 4 × 3/8	4 5¼		3905	605			11/15
			1	pw98	PL 11 × 3/8	1 3		STK 3372	438 (BENT)			11/15
			1	pn8	PL 4 × 3/8	1 6½		3905	605			11/27
			2	pa075	PL 11 × ½	0 11		STK 3680	405			11/26
			1	fa	PL 10 × 5/8	1 0 3/8		STK 3774	322			11/25
			1	pv18	PL 4 × 3/8	4 11 5/16		3905	605 (FIE)			2/14
			364		3/4 ϕ STUDS	0 4		27150	301	AUTO END WELDED		11/16
			1	1SP4	SOLE PL				DET. ON DWG. 1			
			5		7/8 ϕ BOLTS	0 24		24661	202	HEX. HD. HEX NUT (A325)		
			5		HARD WASHER FOR 7/8 ϕ BOLTS			24661	203 (A325)			
			9		7/8 ϕ HEX NUTS				STK (A307)	FOR 7/8 ϕ MACH. BOLTS.		

SHEET TOTAL

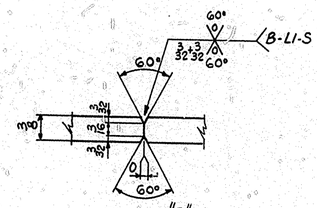

DETAIL "B"

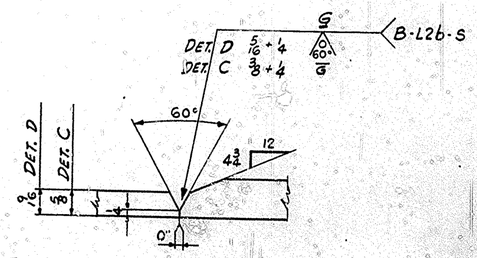

DETAIL "C" & "D"

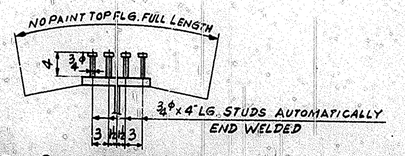

TYP. SECTION THRU TOP FLG.

WORK THIS DWG WITH DWGS. 110 & 111

FOR GENERAL NOTES SEE DWG GN1

MATL ASTM A36 (UN)

APPROVED FOR SHOP

HMF 7/7/70 CHIEF DRAFTSMAN

JWC 9/7/70 CHIEF ENGINEER

REVISION NOTES

149

GIRDER DETAILS SPAN 5E

BRIDGE OVER NORTH WESTERN PARKWAY & 22ND ST.

DEPT. OF HIGHWAYS COMMONWEALTH OF KENTUCKY

JEFFERSON COUNTY FAP IC4-2(72); SPSG-2173-241

CONTRACTOR MATTINGLY BRIDGE CO.

NASHVILLE BRIDGE COMPANY

NASHVILLE, TENN.

BESSEMER PLANT

HOLES 15/16 ϕ OR NOTED

FIELD CONN. 7/8 H.S.B.

SHOP PAINT } SEE GN1

FIELD

DRAWN BY G.D. DATE 12-10-69

IN CHARGE G.A.T.T. (TEAM 2)

CHECKED BY JM DATE 12/30/69

DATE PRINTED

BILLS MATERIAL NO.	CONT. C6736	DRAWING NO.
110 & 111	S.O. B5725	140

A. G. ELLIOTT CO. PHIL., PA. REDUCED 4.7867

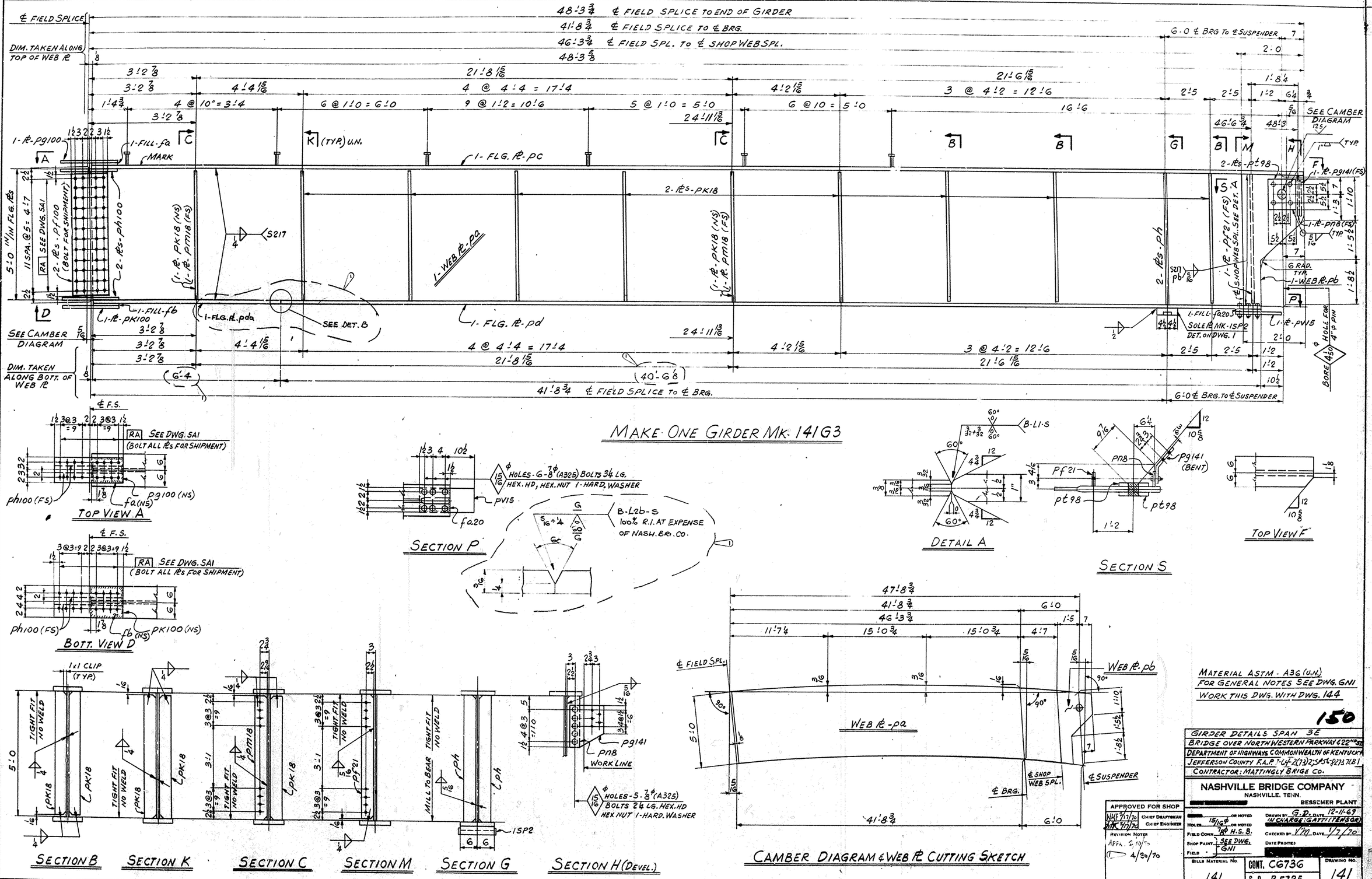

MATERIAL ASTM - A36 (U.N.)
FOR GENERAL NOTES SEE DWG. GN1
WORK THIS DWG. WITH DWG. 144

150

GIRDER DETAILS SPAN 3E
BRIDGE OVER NORTH WESTERN PARKWAY & 22ND ST.
DEPARTMENT OF HIGHWAYS, COMMONWEALTH OF KENTUCKY
JEFFERSON COUNTY F.A.P. I-64-2(73)2, SP54-0273 7181
CONTRACTOR: MATTINGLY BRIGE CO.

NASHVILLE BRIDGE COMPANY
NASHVILLE, TENN.
BESSEMER PLANT

HOLES	15/16 ϕ OR NOTED
FIELD CONN.	7/8 ϕ H.S.B.
SHOP PAINT	SEE DWG. GN1
FIELD	
DRAWN BY	G.D. DATE 12-11-69
IN CHARGE	G. ATTITTENSOR
CHECKED BY	DATE 1/7/70
DATE PRINTED	

APPROVED FOR SHOP
CHIEF DRAFTSMAN 1/7/70
CHIEF ENGINEER 1/7/70
REVISION NOTES
APPR. 2/10/70
1 4/30/70

BILLS MATERIAL NO	CONT. CG736	DRAWING NO.
141	S.O. B5725	141

BRIDGE

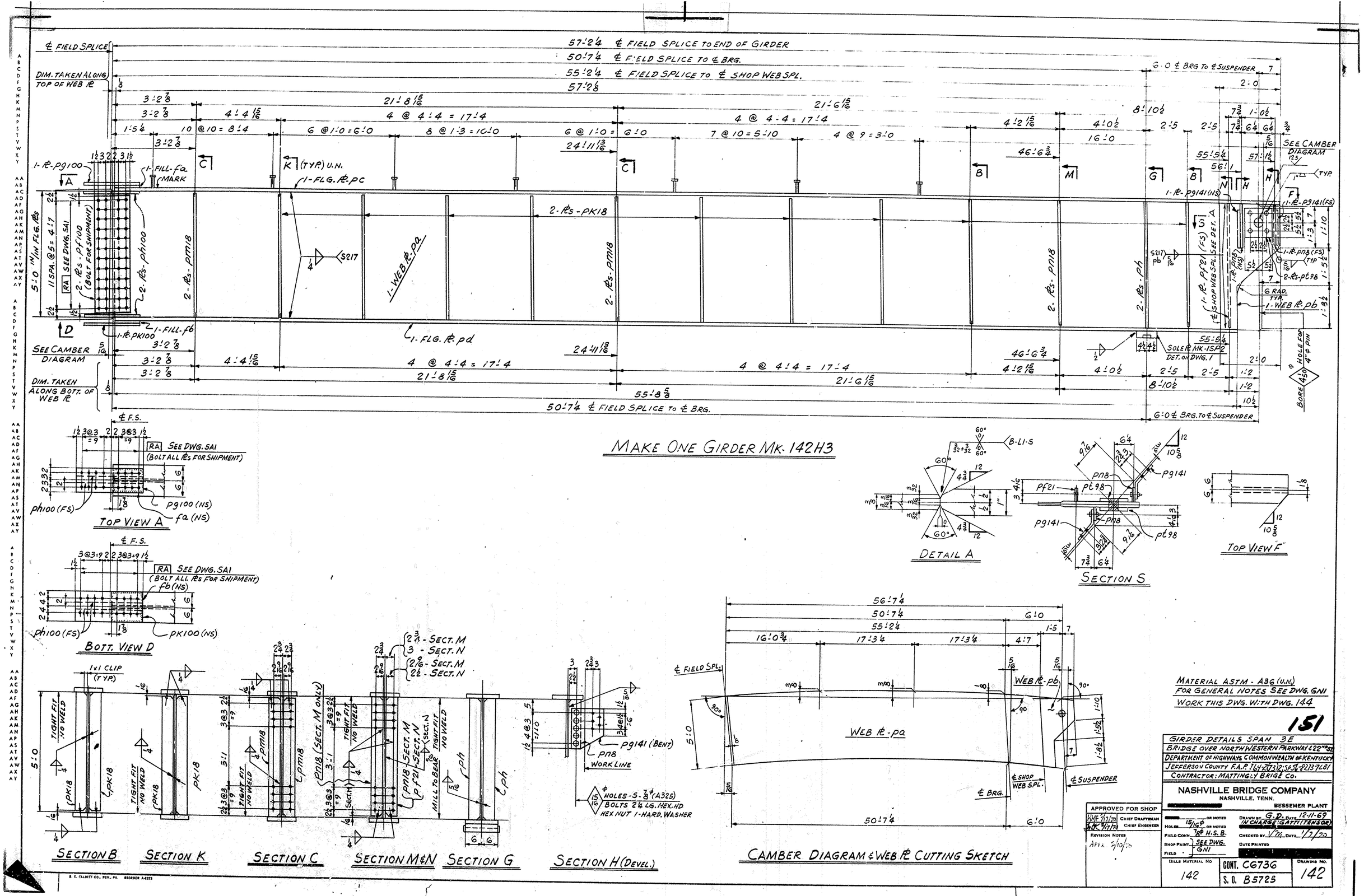

MATERIAL ASTM - A36 (U.N.)
FOR GENERAL NOTES SEE DWG. GN1
WORK THIS DWG. WITH DWG. 144

151

GIRDER DETAILS SPAN 3E
BRIDGE OVER NORTH WESTERN PARKWAY & 22nd ST.
DEPARTMENT OF HIGHWAYS COMMONWEALTH OF KENTUCKY
JEFFERSON COUNTY F.A.P. 164-2(22) SP.S4-P2137.01
CONTRACTOR: MATTINGLY BRIDGE CO.

NASHVILLE BRIDGE COMPANY
NASHVILLE, TENN.
BESSEMER PLANT

APPROVED FOR SHOP
NMF 7/7/70 CHIEF DRAFTSMAN
JOK 7/7/70 CHIEF ENGINEER
REVISION NOTES
Apex 5/10/70

DRAWN BY G.D. DATE 12-11-69
IN CHARGE (GATTI-TENSOR)
HOLES 15/16" ⌀ OR NOTED
FIELD CONN. ⅞" ⌀ H.S.B.
SHOP PAINT SEE DWG. GN1
FIELD
CHECKED BY VM DATE 1/7/70
DATE PRINTED

BILL MATERIAL NO 142
CONT. C6736
S.O. B5725
DRAWING NO. 142

B. K. ELLIOTT CO., PGH., PA. REORDER A-8373

BRIDGE

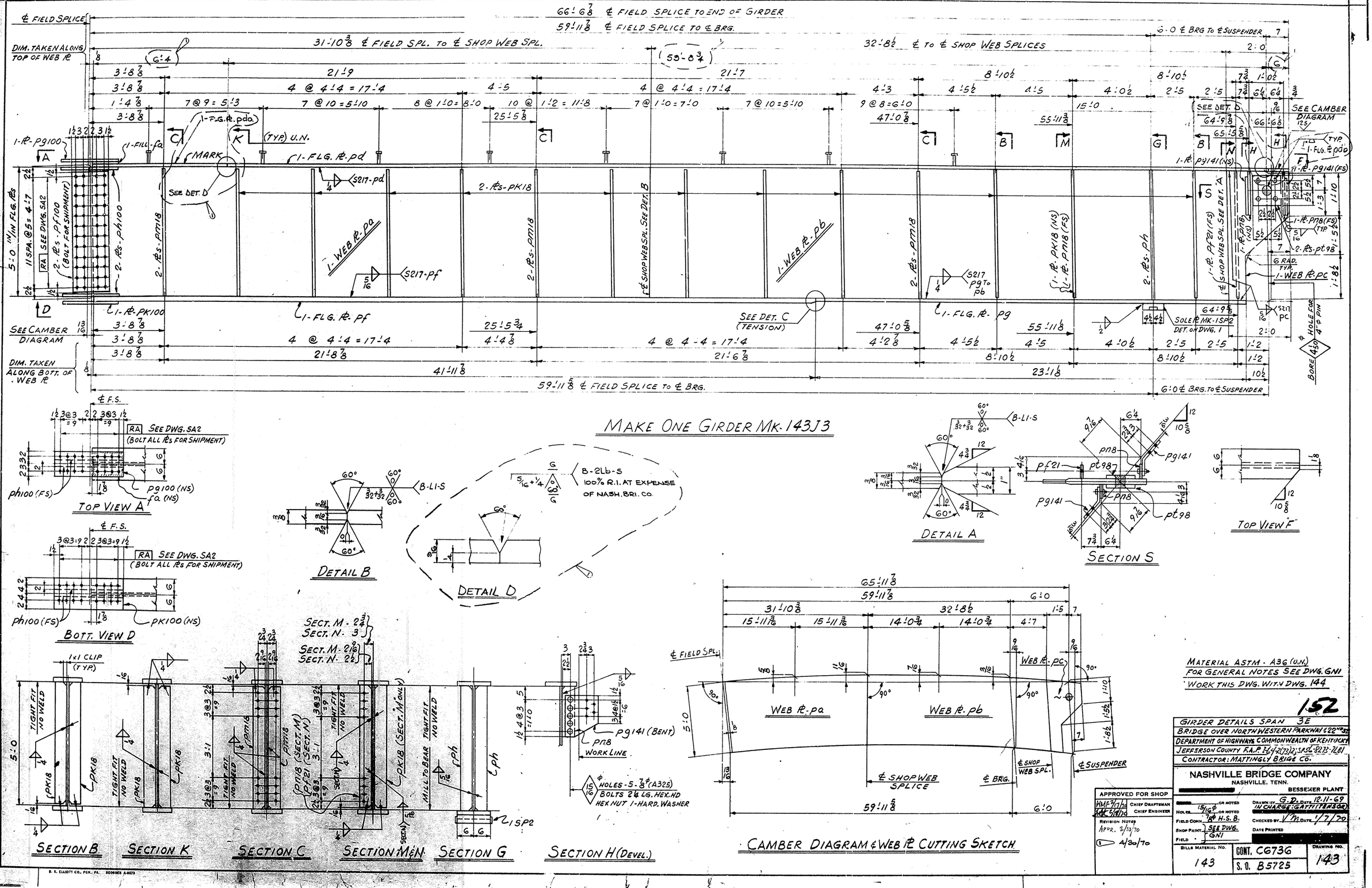

MAKE ONE GIRDER MK-143J3

TOP VIEW A

BOTT. VIEW D

DETAIL B

DETAIL D

DETAIL A

SECTION S

TOP VIEW F

SECTION B — SECTION K — SECTION C — SECTION M&N — SECTION G — SECTION H (DEVEL.)

CAMBER DIAGRAM & WEB PL CUTTING SKETCH

MATERIAL ASTM - A36 (U.N.)
FOR GENERAL NOTES SEE DWG. GN1
WORK THIS DWG. WITH DWG. 144

152

GIRDER DETAILS SPAN 3E
BRIDGE OVER NORTH WESTERN PARKWAY & 22ND ST.
DEPARTMENT OF HIGHWAYS COMMONWEALTH OF KENTUCKY
JEFFERSON COUNTY F.A.P. 264-2(73)2; S.A.S.C. 8273-7.61
CONTRACTOR: MATTINGLY BRIDGE CO.

NASHVILLE BRIDGE COMPANY
NASHVILLE, TENN.
BESSEMER PLANT

APPROVED FOR SHOP	
WMF 2/17/70 Chief Draftsman	
MC 5/8/70 Chief Engineer	
Revision Notes: Appr. 2/10/70; 1 4/30/70	
Holes	15/16" ⌀ or noted
Field Conn.	7/8" ⌀ H.S.B.
Shop Paint	See Dwg. GN1
Field	
Drawn by	G.D. Date 12-11-69
In charge	G.A. Tittensor
Checked by	Vm Date 1/7/70
Date Printed	
Bills Material No.	143
Cont.	CG736
S.O.	B5725
Drawing No.	143

BRIDGE

NASHVILLE BRIDGE COMPANY

SHOP ORDER NO. B5725 | WORK ORDER NO. | CONTRACT NO. C6736 | BILL NO. 141 | DRAWING NO. 141 & 144

COMMONWEALTH OF KENTUCKY DEPT. OF HIGHWAYS

BRIDGE OVER NORTHWESTERN PARKWAY & 22ND ST. JEFFERSON COUNTY

FABRICATION BESSEMER PLANT

ITEM | WEIGHTS BY | CHECKED BY

SHOP	SHIPPING MARK	ITEM COUNT	ASSEMBLY MARK	SHAPE	SECTION	FINISHED LENGTH FT. IN.	ORDERED LENGTH FT. IN.	P.O. NO.	ITEM NO.	REMARKS	SPECIF. WEIGHT	A.I.S.C. WEIGHT	
					MATERIAL ASTM A36 (U.N.)								
ONE	141G3				GIRDER								
		1	pa	PL	60 9/16 × 3/8	46 3 1/8	61 × 46'-6	3908	504	PL 61 × 3'-6 MATCH CUT 1-EA-pb & pd83			7/20
		1	pb	PL	24 9/16 × 1	5 0		3910	306				7/2
		1	pc	PL	12 × 9/16	48 3 1/8	48 5/8 CUTS, GEN.	3910	332				9/9
	1	1	pd	PL	12 × 9/16	40 6 1/8	40 7/8 CUTS GEN.	3910	332				9/10
		1	pg100	PL	10 × 3/8	2 1		STK 3740	410				11/18
		2	pf100	PL	13 × 3/8	4 10		STK 3425	408				11/17
		4	ph100	PL	4 × 3/8	2 1		3905	605				11/20
		1	pk100	PL	12 × 3/8	2 1		STK 3740	410				11/19
		18	pm18	PL	4 × 3/8	4 11 13/16		3905	605	(FIE)			11/16
		2	pm18	PL	4 × 3/8	4 11 13/16		3905	605	(FIE)			11/16
		1	pf21	PL	4 × 3/8	4 11 13/16		3905	605	(FIE)			11/16
		2	ph	PL	5 1/2 × 1	5 0		3910	304	(MIE) (FIE)			10/25
		1	pg141	PL	12 3/4 × 3/8	1 3		STK 3372	438	(BENT)			11/27
		1	pn8	PL	4 × 3/8	1 6 1/2		3905	605				11/26
		2	pt98	PL	11 × 5/8	0 11		STK 3774	322				11/24
		1	pv15	PL	7 × 3/4	1 7		STK 2674	316				11/21
		1	fa20	PL	7 × 9/16	0 10		3910	323				11/23
		1	fa	PL	10 × 9/16	1 0 3/8		STK 3545	614				25/5
		1	fb	PL	12 × 9/16	1 0 3/8		STK 3445	614				25/6
	1	1	pda	PL	12 × 9/16	6 4		STK.					
		124			3/4φ STUDS	0 4		27120	301	AUTO. END WELDED			
		5			7/8φ BOLTS	0 2 1/4		26661	202	(A325) HEX HD HEX NUT			
		6			7/8φ BOLTS	0 3 1/4			206				
		11			HARD WASHERS FOR 7/8φ BOLTS			26661	203	(A325)			
		1	ISP2		SOLE PL					DET. ON DWG. 1			

SHEET TOTAL

NASHVILLE BRIDGE COMPANY

SHOP ORDER NO. B5725 | WORK ORDER NO. | CONTRACT NO. C6736 | BILL NO. 142 | DRAWING NO. 142 & 144

COMMONWEALTH OF KENTUCKY DEPT. OF HIGHWAYS

BRIDGE OVER NORTHWESTERN PARKWAY & 22ND ST. JEFFERSON COUNTY

FABRICATION BESSEMER PLANT

ITEM | WEIGHTS BY | CHECKED BY

SHOP	SHIPPING MARK	ITEM COUNT	ASSEMBLY MARK	SHAPE	SECTION	FINISHED LENGTH FT. IN.	ORDERED LENGTH FT. IN.	P.O. NO.	ITEM NO.	REMARKS	SPECIF. WEIGHT	A.I.S.C. WEIGHT	
					MATERIAL ASTM A36 (U.N.)								
ONE	142H3				GIRDER								
		1	pa	PL	60 3/8 × 3/8	55 2 1/8	61 × 55'-6	3908	434	PL 61 × 3'-6 MATCH CUT 1-EA pb & pd79			7/23
		1	pb	PL	24 9/16 × 1	5 0		3910	306				7/2
		1	pc	PL	12 × 9/16	57 2 5/8	85 1/2 CUTS 6 1/2	3910	325				9/15
		1	pd	PL	12 × 9/16	55 8 3/8	85 1/2 × 56'-0 CUTS 7	3910	326				9/16
		18	pk18	PL	4 × 3/8	4 11 13/16		3905	605	(FIE)			11/16
		4	pm18	PL	4 × 3/8	4 11 13/16							
		2	pn18	PL	4 × 3/8	4 11 13/16							
		1	pf21	PL	4 × 3/8	4 11 13/16		3905	605	(FIE)			11/16
		2	ph	PL	5 1/2 × 1 1/16	5 0		3910	234	(MIE) (FIE)			10/26
		2	pf100	PL	13 × 3/8	4 10		STK 3425	408				11/17
		1	pg100	PL	10 × 3/8	2 1		STK 3740	410				11/18
		4	ph100	PL	4 × 3/8	2 1		3905	605				11/20
		1	pk100	PL	12 × 3/8	2 1		STK 3740	410				11/19
		2	pg141	PL	12 3/4 × 3/8	1 3		STK 3372	438	(BENT)			11/27
		2	pn8	PL	4 × 3/8	1 6 1/2		3905	605				11/26
		2	pt98	PL	11 × 5/8	0 11		STK 3774	322				11/24
		1	fa	PL	10 × 3/8	1 0 3/8		STK 3740	410				25/10
		1	fb	PL	12 × 3/8	1 0 3/8		STK 3740	410				25/11
		168			3/4φ STUDS	0 4		27120	301	AUTO. END WELDED			
		10			7/8φ BOLTS	0 2 4		26661	202	(A325) HEX HD HEX NUT			
		10			HARD WASHERS FOR 7/8φ BOLTS				203	(A325)			
		1	ISP2		SOLE PL					DET. ON DWG. 1			

SHEET TOTAL

NASHVILLE BRIDGE COMPANY

SHOP ORDER NO. B5725 | WORK ORDER NO. | CONTRACT NO. C6736 | BILL NO. 143 | DRAWING NO. 143 & 144

COMMONWEALTH OF KENTUCKY DEPT. OF HIGHWAYS

BRIDGE OVER NORTHWESTERN PARKWAY & 22ND ST. JEFFERSON CO.

FABRICATION BESSEMER PLANT

ITEM | WEIGHTS BY | CHECKED BY

SHOP	SHIPPING MARK	ITEM COUNT	ASSEMBLY MARK	SHAPE	SECTION	FINISHED LENGTH FT. IN.	ORDERED LENGTH FT. IN.	P.O. NO.	ITEM NO.	REMARKS	SPECIF. WEIGHT	A.I.S.C. WEIGHT	
					MATERIAL ASTM A36 (U.N.)								
ONE	143J3				GIRDER								
		1	pa	PL	60 1/16 × 3/8	31 10 1/2	61 × 32'-2	3908	515				7/29
		1	pb	PL	60 1/16 × 3/8	32 9 1/2	61 × 32'-11	3908	514	PL 61 × 3'-6 MATCH CUT 1-EA-pc & pd80			7/27
		1	pc	PL	24 9/16 × 1	5 0		3910	306				7/2
	1	1	pd	PL	12 × 9/16	50 8 3/8	73 1/2 CUTS 6 1/2	3910	331				9/23
		1	pf	PL	12 × 3/8	41 11 5/8		3914	308				9/25
		1	pg	PL	12 × 9/16	23 1 1/8	73 1/2 CUTS 6 1/2	3910	331				9/24
		2	pf100	PL	13 × 3/8	4 10		STK 3425	408				11/17
		1	pg100	PL	10 × 3/8	2 1		STK 3740	410				11/18
		4	ph100	PL	4 × 3/8	2 1		3905	605				11/20
		1	pk100	PL	12 × 3/8	2 1		STK 3740	410				11/19
		6	pm18	PL	4 × 3/8	4 11 13/16		3905	605	(FIE)			11/16
		1	pn18	PL	4 × 3/8	4 11 13/16							
		1	pf21	PL	4 × 3/8	4 11 13/16							
		21	pk18	PL	4 × 3/8	4 11 13/16		3905	605	(FIE)			11/16
		2	pg141	PL	12 3/4 × 3/8	1 3		STK 3372	438	BENT			11/27
		2	pn8	PL	4 × 3/8	1 6 1/2		3905	605				11/26
		2	pt98	PL	11 × 5/8	0 11		STK 3774	322				11/24
		1	fa	PL	10 × 4	1 0 3/8		STK 3470	608				25/7
		2	ph	PL	5 1/2 × 1 1/8	5 0		3910	232	(MIE) (FIE)			8/3
	1	1	pda	PL	12 × 9/16	6 4		STK					
		204			3/4φ STUDS	0 4		27120	301	AUTO. END WELDED			
	1	1	pdb	PL	12 × 9/16	0 6		STK					
		10			7/8φ BOLTS	0 2 4		26661	202	(A325) HEX HD HEX NUT			
		10			HARD WASHERS FOR 7/8φ BOLTS				203	(A325)			
		1	ISP2		SOLE PL					DET. ON DWG. 1			

SHEET TOTAL

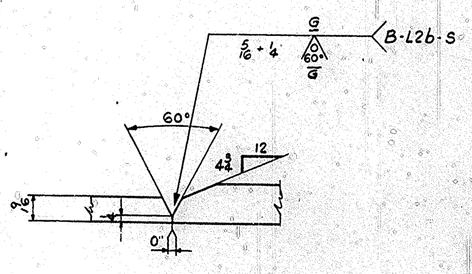

DETAIL "C"
(FOR GIRDER 143J3 ONLY)

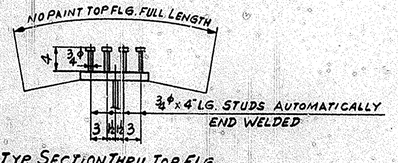

TYP. SECTION THRU TOP FLG.

WORK THIS DWG WITH DWGS. 141, 142, 143

FOR GENERAL NOTES SEE DWG GN1

MATL ASTM A36 (UN)

APPROVED FOR SHOP

NMF 5/11/70 CHIEF DRAFTSMAN

JAK 5/18/70 CHIEF ENGINEER

REVISION NOTES

1 4/30/70

153

GIRDER DETAILS SPAN 3E

BRIDGE OVER NORTHWESTERN PARKWAY & 22ND ST.

DEPT. OF HIGHWAYS COMMONWEALTH OF KENTUCKY

JEFFERSON COUNTY FAP IGA 2(73)2; SP56-9273-7L81

CONTRACTOR MATTINGLY BRIDGE CO.

NASHVILLE BRIDGE COMPANY
NASHVILLE, TENN.
BESSEMER PLANT

HOLES 15/16φ OR NOTED | FIELD CONN. 7/8φ H.S.B. OR NOTED | SHOP PAINT SEE GN1 | FIELD

DRAWN G.D. DATE 12-12-69 IN CHARGE GATTI (PENSKE)

CHECKED BY VM DATE 1/7/70

DATE PRINTED

BILL MATERIAL NO. 141, 142, 143

CONT. C6736 | S.O. B5725 | DRAWING NO. 144

BRIDGE

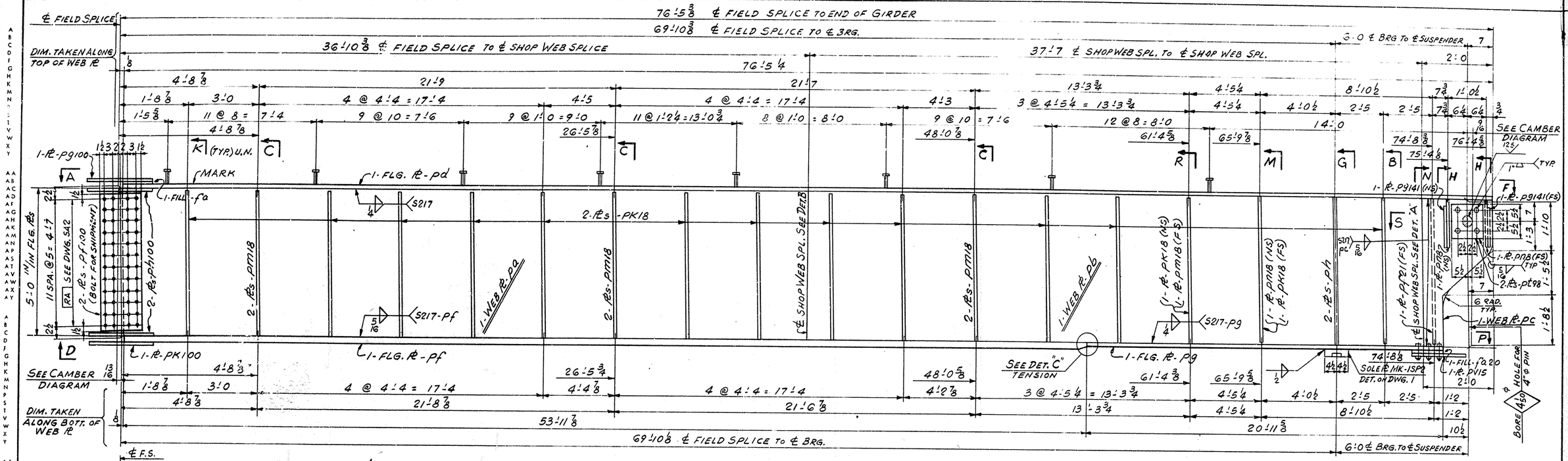

MAKE ONE GIRDER MK-145K3

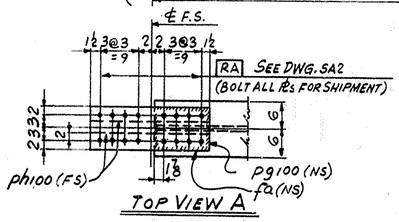

TOP VIEW A

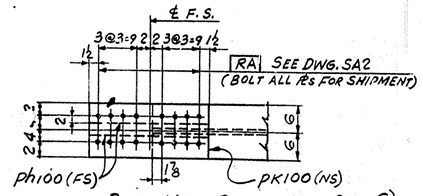

BOTT. VIEW D

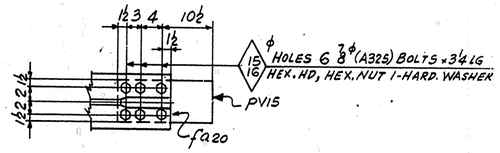

SECTION P

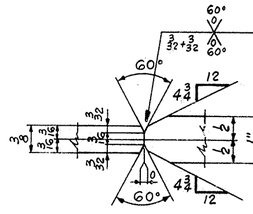

DETAIL A

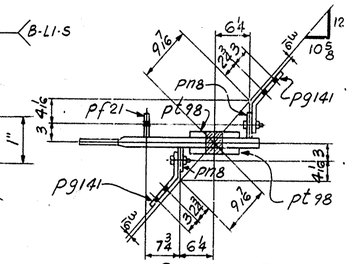

SECTION S

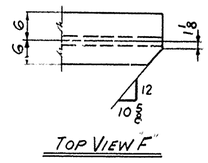

TOP VIEW F

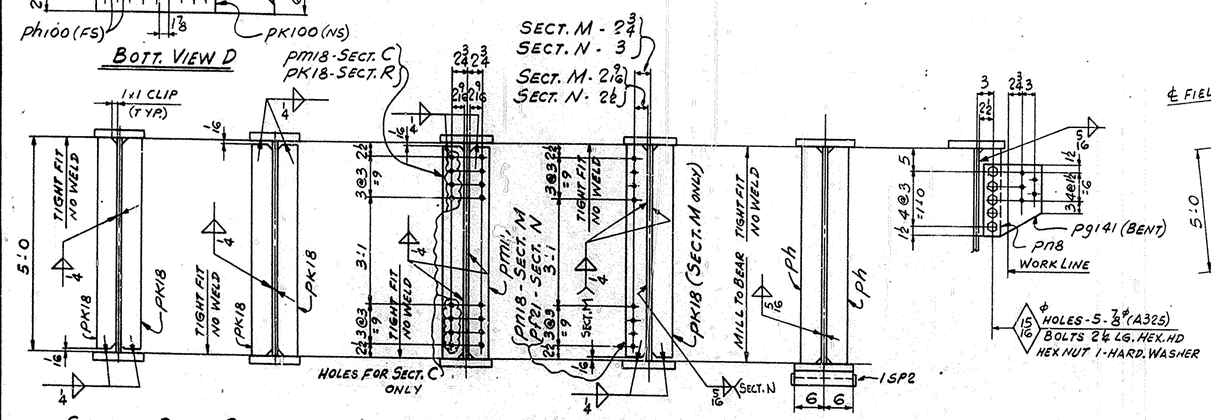

SECTION B | SECTION K | SECTION C&R | SECTION M&N | SECTION G | SECTION H (DEVEL.)

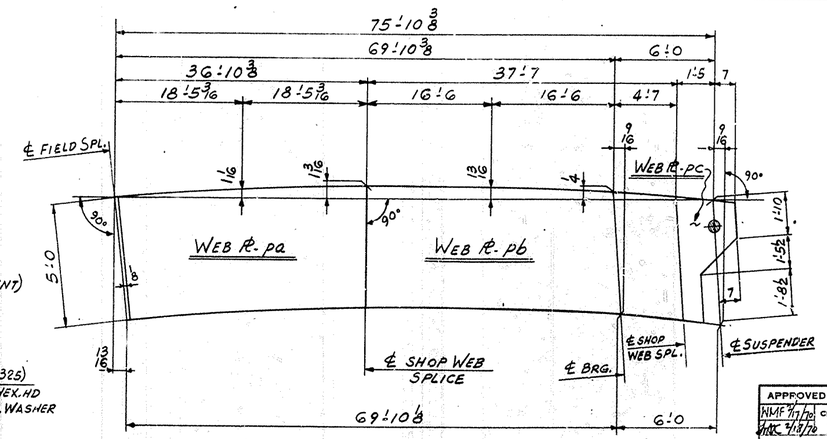

CAMBER DIAGRAM & WEB PL CUTTING SKETCH

MATERIAL ASTM - A36 (U.N.)
FOR GENERAL NOTES SEE DWG. GN1
WORK THIS DWG. WITH DWG. 147

154

GIRDER DETAILS SPAN 3E
BRIDGE OVER NORTH WESTERN PARKWAY & 22ND ST.
DEPARTMENT OF HIGHWAYS, COMMONWEALTH OF KENTUCKY
JEFFERSON COUNTY F.A.P. IG4 2(73)2, SPS-2273-7281
CONTRACTOR: MATTINGLY BRIDGE CO.

NASHVILLE BRIDGE COMPANY
NASHVILLE, TENN.
BESSEMER PLANT

APPROVED FOR SHOP	
NMF 2/17/70	CHIEF DRAFTSMAN
MRC 2/18/70	CHIEF ENGINEER
REVISION NOTES	
APPR. 2/10/70	

HOLES	15/16⌀ OR NOTED
FIELD CONN.	7/8⌀ H.S.B. OR NOTED
SHOP PAINT	SEE DWG. GN1
FIELD	
DRAWN BY	G.D. DATE 12-12-69
	IN CHARGE: GAPPITENSOR
CHECKED BY	VM DATE 1/7/70
DATE PRINTED	
BILL MATERIAL NO.	145
CONT.	C6736
S.O.	B5725
DRAWING NO.	145

BRIDGE

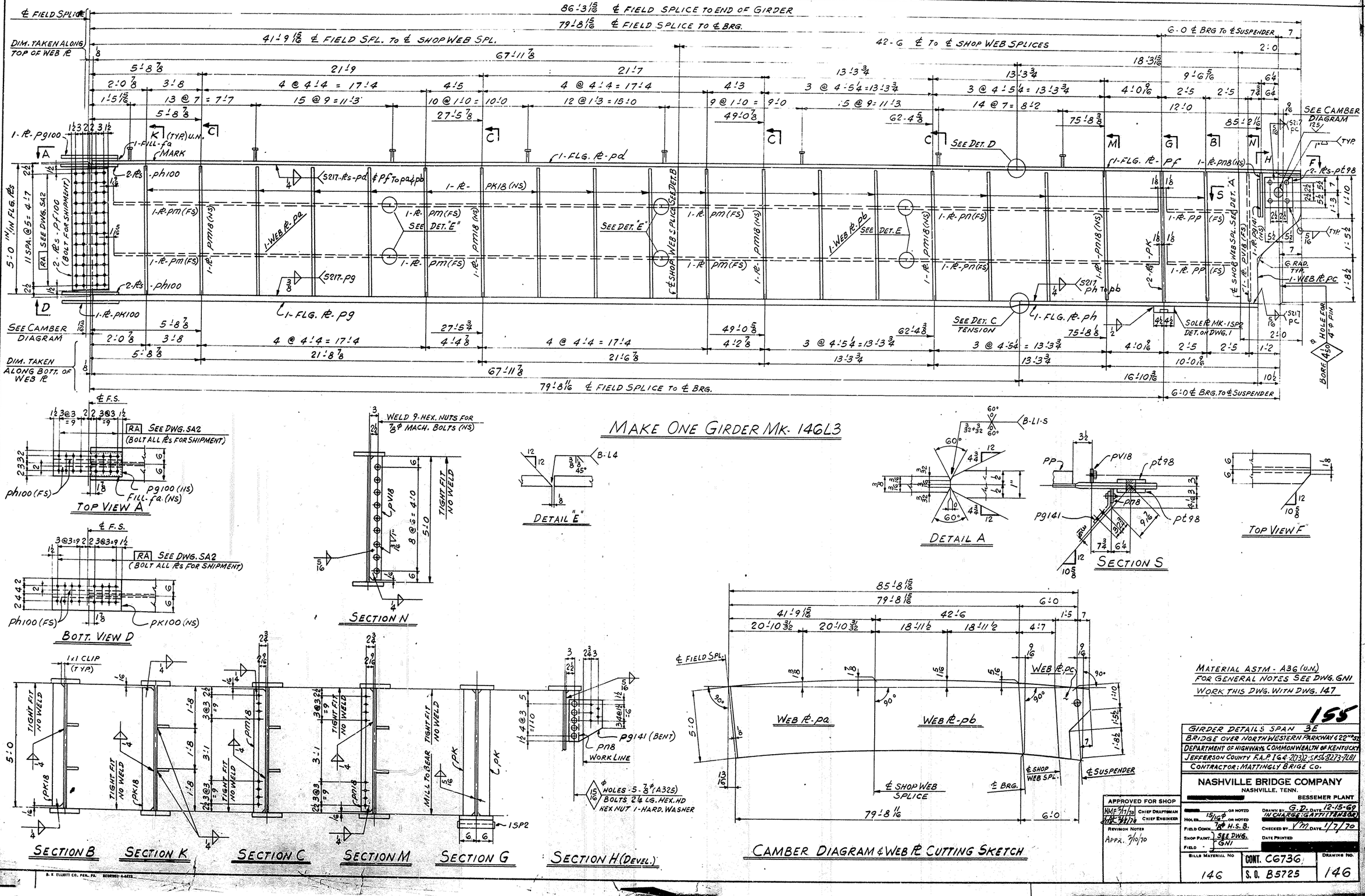

MAKE ONE GIRDER MK-146L3

MATERIAL ASTM - A36 (U.N.)
FOR GENERAL NOTES SEE DWG. GN1
WORK THIS DWG. WITH DWG. 147

155

GIRDER DETAILS SPAN 3E
BRIDGE OVER NORTHWESTERN PARKWAY & 22nd ST.
DEPARTMENT OF HIGHWAYS, COMMONWEALTH OF KENTUCKY
JEFFERSON COUNTY F.A.P. I64-2(032); SPSL-8273-7181
CONTRACTOR: MATTINGLY BRIDGE CO.

NASHVILLE BRIDGE COMPANY
NASHVILLE, TENN.
BESSEMER PLANT

APPROVED FOR SHOP
NMF 3/17/70 CHIEF DRAFTSMAN
JAC 3/18/70 CHIEF ENGINEER
REVISION NOTES
APPR. 3/10/70

HOLES 15/16" ϕ OR NOTED; 7/8" ϕ H.S.B. OR NOTED
FIELD CONN. / SHOP PAINT / FIELD: SEE DWG. GN1

DRAWN BY G.D. DATE 12-15-69
IN CHARGE: G.A. TITTENSOR
CHECKED BY VM DATE 1/7/70
DATE PRINTED

BILLS MATERIAL NO	CONT. C6736	DRAWING NO.
146	S.O. B5725	146

BRIDGE

NASHVILLE BRIDGE COMPANY

SHOP ORDER NO. B 5725 | WORK ORDER NO. | CONTRACT NO. C 6736

COMMONWEALTH OF KENTUCKY DEPT. OF HIGHWAYS

BRIDGE OVER NORTH WESTERN PARKWAY & 22ND ST. JEFFERSON COUNTY

FABRICATION BESSEMER PLANT

BILL NO. 145 | DRAWING NO. 145 & 147

ITEM | WEIGHTS BY | CHECKED BY

SHIP	SHIPPING MARK	ITEM	ASSEMBLY MARK	SECTION	PLANNED LENGTH	ORDERED LENGTH	ITEM NUMBER	REMARKS	UNIT WEIGHT	B.S.C. WEIGHT
				MATERIAL ASTM-A36 (U.N.)						
	ONE 145K3			GIRDER						
			1	pa PL	61 1/16 × 3/8	36 10½	61½×37'-2	3908 426		
			1	pb PL	61 1/16 × 3/8	37 7 1/16	61½×37'-9	3908 425		
			1	pc PL	24 1/16 × 1	5 0		3910 306	PL 61×3'-6 MATCH CUT 1 EA - PC & PD81	
			1	pd PL	12 × 7/16	76 5¾	73¾ cuts @ 12	3910 328		
			1	pf PL	12 × 1¼	53 11⅞		230		
			1	pg PL	12 × 7/16	20 11⅞	73¾ cuts @ 12	3910 331		
			2	pf100 PL	13 × 3/8	4 10		STK 3485 408		
			1	pg100 PL	10 × 3/8	2 1		STK 3740 410		
			4	ph100 PL	4 × 3/8	2 1		3905 605		
			1	pk100 PL	12 × 3/8	2 1		STK 3740 410		
			26	pk18 PL	4 × 3/8	4 11 15/16		3905 605 (FIE)		
			7	pm18 PL	4 × 3/8	4 11 15/16				
			1	pn18 PL	4 × 3/8	4 11 15/16				
			1	pf21 PL	4 × 3/8	4 11 15/16		3905 605 (FIE)		
			2	ph PL	5½ × 1¼	5 0		3910 230 (MIE) (FIE)		
			2	pg141 PL	12¾ × 3/8	1 3		STK 3372 438 (BENT)		
			2	pn8 PL	4 × 3/8	1 6½		3905 605		
			2	pt98 PL	11 × 5/8	0 11		STK 3774 322		
			1	pv15 PL	7 × ¾	1 7		STK 2674 346		
			1	fa20 PL	7 × 1 1/16	0 10		3910 323		
			1	fa PL	10 × 3/8	1 0⅜		STK 3740 410		
			280		¾ϕ STUDS	0 4		STK 3120 301	AUTO. END WELDED	
			10		⅞ϕ BOLTS	0 24		STK 2661 202 (A325)	HEX. HD. HEX. NUT	
			6		⅞ϕ BOLTS	0 34		202		
			16		HARD WASHERS FOR ⅞ϕ BOLTS			STK 2661 203 (A325)		
			1	ISP2	SOLE PL				DET. ON DWG. 1	

SHEET TOTAL

NASHVILLE BRIDGE COMPANY

SHOP ORDER NO. B 5725 | WORK ORDER NO. | CONTRACT NO. C 6736

COMMONWEALTH OF KENTUCKY DEPT. OF HIGHWAYS

BRIDGE OVER NORTH WESTERN PARKWAY & 22ND ST. JEFFERSON CO.

FABRICATION BESSEMER PLANT

BILL NO. 146 | DRAWING NO. 146 & 147

ITEM | WEIGHTS BY | CHECKED BY

SHIP	SHIPPING MARK	ITEM	ASSEMBLY MARK	SECTION	PLANNED LENGTH	ORDERED LENGTH	ITEM NUMBER	REMARKS	UNIT WEIGHT	B.S.C. WEIGHT
				MATERIAL ASTM-A36 (U.N.)						
		ONE 146L3		GIRDER						
7/31			1	pa PL	61 1/16 × 3/8	41 9⅞		62×42'-0 3908 417		8/3
7/30			1	pb PL	61 1/16 × 3/8	42 6 1/16		62×42'-9 3908 416	PL 61×3'-6 MATCH CUT 1 EA - PC & PD86	8/2
7/2			1	pc PL	24 1/16 × 1	5 0		3910 306		7/2
10/3			1	pd PL	12 × 7/16	67 11⅞	73¾ cuts @ 12	3910 331		10/13
10/10			1	pf PL	12 × 1 1/16	18 3 15/16		STK 2674 333		10/12
10/11			1	pg PL	12 × 1 1/16	67 11⅞		3914 218		10/20
11/17			1	ph PL	12 × 1 1/16	16 10⅞	73¾ cuts @ 12	3910 332		10/19
11/18			2	pf100 PL	13 × 3/8	4 10		STK 3485 408		11/17
11/20			1	pg100 PL	10 × 3/8	2 1		STK 3740 410		11/18
11/19			4	ph100 PL	4 × 3/8	2 1		3905 605		11/20
11/16			1	pk100 PL	12 × 3/8	2 1		STK 3740 410		11/19
			2	pk PL	5½ × 1 1/16	5 0		STK 1864 228 (MIE) (FIE)		11/2
			14	pk18 PL	4 × 3/8	4 11 15/16		3905 605 (FIE)		11/16
11/16			4	pm18 PL	4 × 3/8	4 11 15/16		(FIE)		11/16
11/9			1	pn18 PL	4 × 3/8	4 11 15/16		(FIE)		11/16
11/27			1	pv18 PL	4 × 3/8	4 11 15/16		3905 605 (FIE)		11/16
11/26			1	pg141 PL	12¾ × 3/8	1 3		STK 3372 438 (BENT)		11/27
11/29			1	pn8 PL	4 × 3/8	1 6½		3905 605		11/26
11/21			2	pt98 PL	11 × 5/8	0 11		STK 3774 322		11/29
11/23			6	pm PL	4 × 3/8	20 0		3905 605		11/15
25/10			2	pn PL	4 × 3/8	18 11 4		3905 605		11/15
			2	pp PL	4 × 3/8	4 5⅜		3905 605		11/15
			1	fa PL	10 × ½	1 0⅜		STK 3620 404		25/12
			356		¾ϕ STUDS	0 4		STK 3120 301	AUTO. END WELDED	
			5		⅞ϕ BOLTS	0 24		STK 2661 202 (A325)	HEX. HD. HEX. NUT	
			5		HARD WASHERS FOR ⅞ϕ BOLTS			203 (A325)		
			9		⅞ϕ HEX. NUT			STK FOR ⅞ϕ (A563) MACH. BOLTS		
			1	ISP2	SOLE PL				DET. ON DWG. 1	

SHEET TOTAL

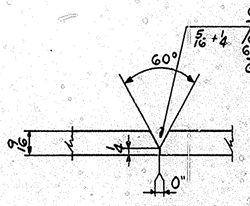

DETAIL "D"
(FOR GIRD. 146L3 ONLY)

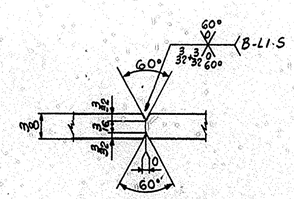

DETAIL B

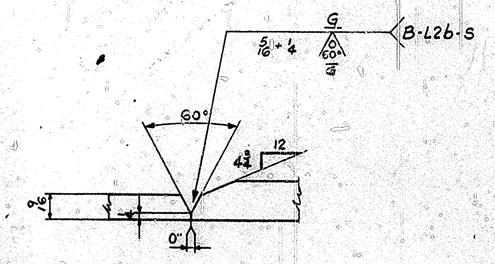

DETAIL "C"

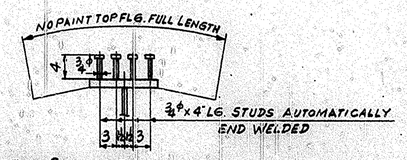

TYP. SECTION THRU TOP FLG.

WORK THIS DWG WITH DWGS. 145 & 146

FOR GENERAL NOTES SEE DWG GN1

MATL ASTM A36 (UN)

APPROVED FOR SHOP

HWE 7/7/72	CHIEF DRAFTSMAN
JAK 5/16/72	CHIEF ENGINEER
REVISION NOTES	

156

GIRDER DETAILS SPAN 3E

BRIDGE OVER NORTH WESTERN PARKWAY & 22ND ST.

DEPT. OF HIGHWAYS COMMONWEALTH OF KENTUCKY

JEFFERSON COUNTY FAP IGC 2(73)2; SP56-P273-72B1

CONTRACTOR MATTINGLY BRIDGE CO.

NASHVILLE BRIDGE COMPANY
NASHVILLE, TENN.
BESSEMER PLANT

HOLES 15/16ϕ OR NOTED
FIELD CONN. ⅞ϕ H.S.B. OR NOTED
SHOP PAINT } SEE GN1
FIELD }

DRAWN BY G.D. DATE 12-15-69
IN CHARGE SCOTT (TENN.)
CHECKED BY M DATE 1/7/70
DATE PRINTED

BILL OF MATERIAL NO. 145 & 146 | CONT. C6736 | S.O. B5725 | DRAWING NO. 147

BRIDGE

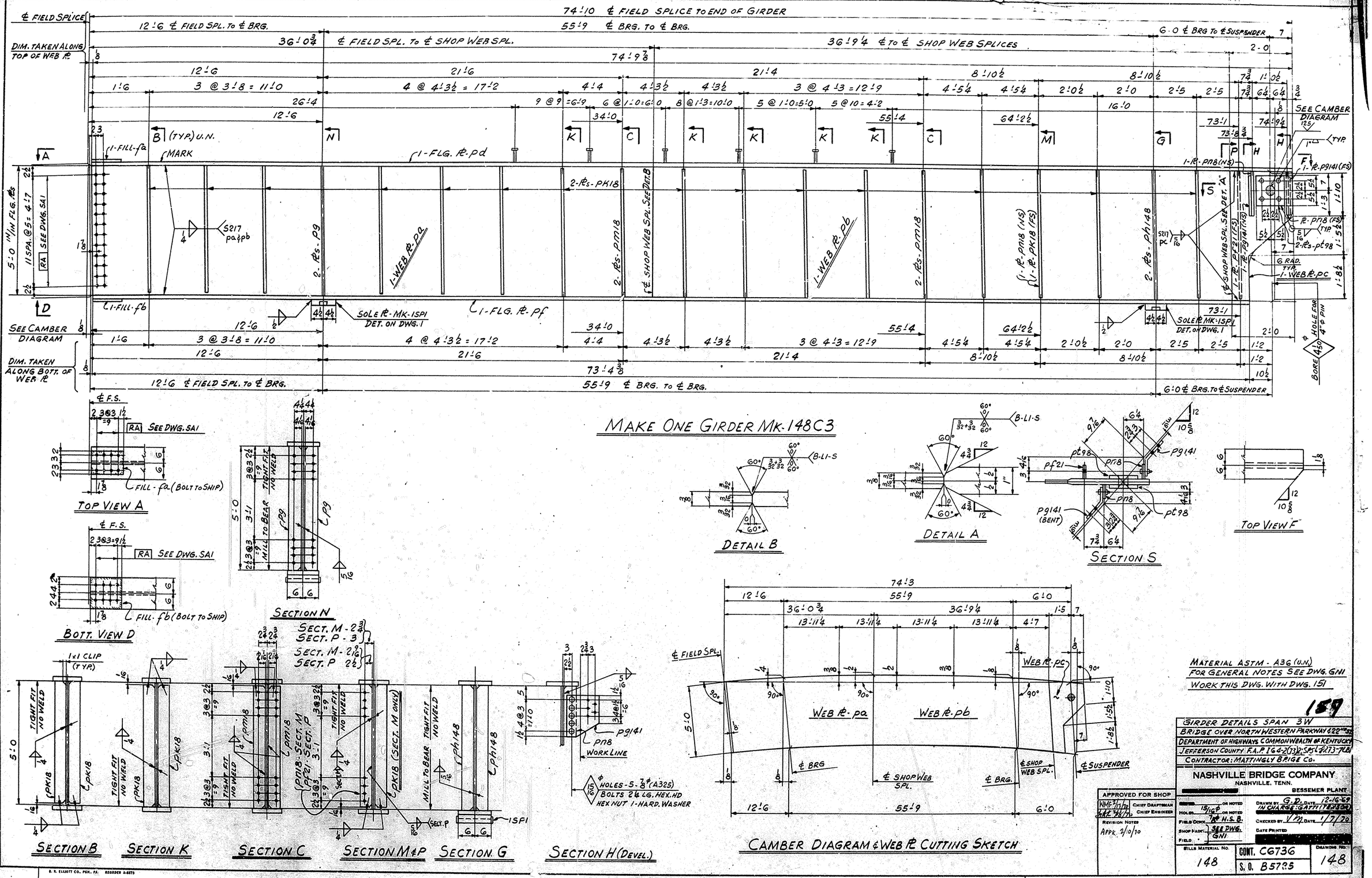

MATERIAL ASTM - A36 (U.N.)
FOR GENERAL NOTES SEE DWG. GN1
WORK THIS DWG. WITH DWG. 151

159

GIRDER DETAILS SPAN 3W
BRIDGE OVER NORTH WESTERN PARKWAY & 22ND ST.
DEPARTMENT OF HIGHWAYS, COMMONWEALTH OF KENTUCKY
JEFFERSON COUNTY F.A.P. I 64-2(73)2; SPS L-273-72B
CONTRACTOR: MATTINGLY BRIDGE Co.

NASHVILLE BRIDGE COMPANY
NASHVILLE, TENN.
BESSEMER PLANT

APPROVED FOR SHOP
WMF 2/17/70 CHIEF DRAFTSMAN
CHIEF ENGINEER
REVISION NOTES
APPR. 2/10/70

HOLES 15/16" OR NOTED
FIELD CONN. ¾" H.S.B. OR NOTED
SHOP PAINT SEE DWG. GN1
FIELD

DRAWN BY G.D. DATE 12-16-69
IN CHARGE GATTI
CHECKED BY DATE 1/7/70
DATE PRINTED

BILLS MATERIAL NO. 148
CONT. C6736
S.O. B5725
DRAWING NO. 148

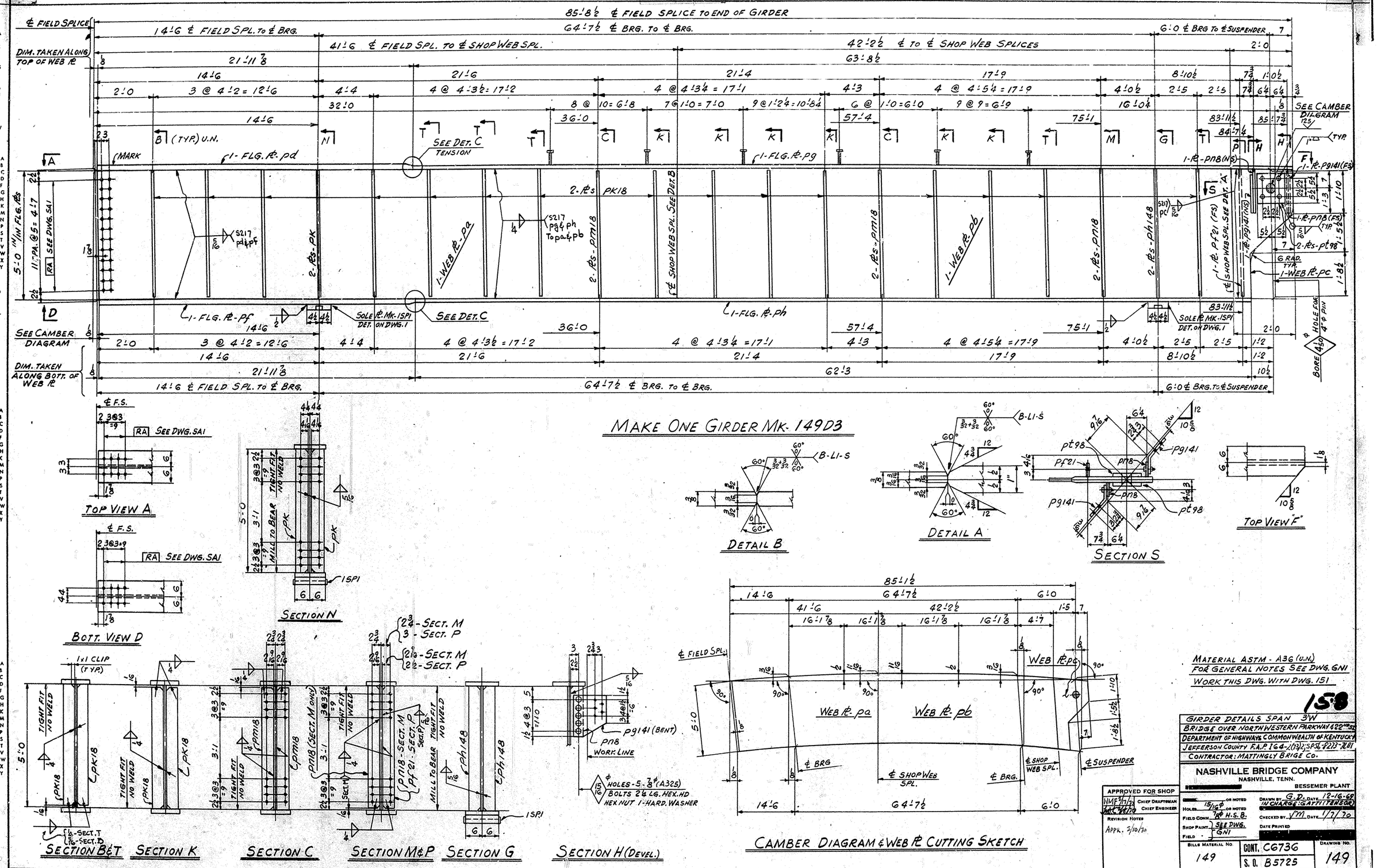

MATERIAL ASTM - A36 (U.N.)
FOR GENERAL NOTES SEE DWG. GN1
WORK THIS DWG. WITH DWG. 151

158

GIRDER DETAILS SPAN 3W
BRIDGE OVER NORTHWESTERN PARKWAY & 22nd ST.
DEPARTMENT OF HIGHWAYS, COMMONWEALTH OF KENTUCKY
JEFFERSON COUNTY F.A.P. 164-1(13) & SPS-1223-281
CONTRACTOR: MATTINGLY BRIDGE CO.

NASHVILLE BRIDGE COMPANY
NASHVILLE, TENN.
BESSEMER PLANT

APPROVED FOR SHOP
NMF 2/11/70 CHIEF DRAFTSMAN
MK 2/18/70 CHIEF ENGINEER
REVISION NOTES
Appr. 2/10/70

HOLES	15/16 ϕ OR NOTED
	7/8 ϕ H.S.B. OR NOTED
FIELD CONN.	SEE DWG. GN1
SHOP PAINT	
FIELD	
DRAWN BY	G.D. DATE 12-16-69
IN CHARGE	G.A.T. (TENSOR)
CHECKED BY	VM DATE 1/7/70
DATE PRINTED	
BILLS MATERIAL NO.	149
CONT.	CG736
S.O.	B5725
DRAWING NO.	149

F. W. ELLIOTT CO., PGH., PA. BEDFORD A-8573

BRIDGE

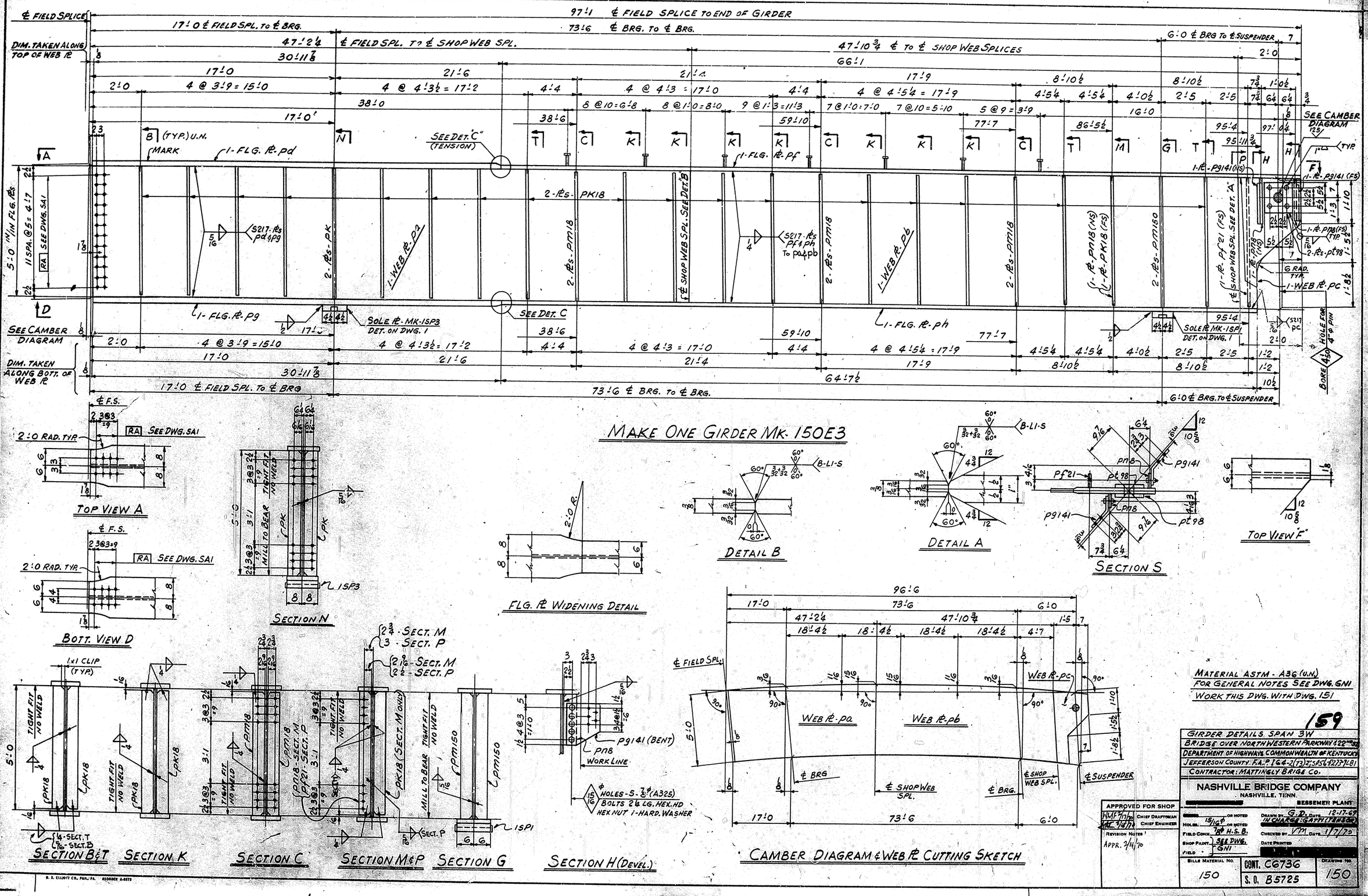

MAKE ONE GIRDER MK-150E3

MATERIAL ASTM - A36 (U.N.)
FOR GENERAL NOTES SEE DWG. GN1
WORK THIS DWG. WITH DWG. 151

159

GIRDER DETAILS SPAN 3W
BRIDGE OVER NORTH WESTERN PARKWAY 422
DEPARTMENT OF HIGHWAYS COMMONWEALTH OF KENTUCKY
JEFFERSON COUNTY F.A.P. I G4-2(73)2; S/SG-42/73-7.81
CONTRACTOR: MATTINGLY BRIDGE CO.

NASHVILLE BRIDGE COMPANY
NASHVILLE, TENN.
BESSEMER PLANT

HOLES	15/16ø OR NOTED
	7/8ø H.S.B.
FIELD CONN.	
SHOP PAINT	SEE DWG. GN1
FIELD	
DRAWN BY	G.D. DATE 12-17-69
IN CHARGE	GATTI
CHECKED BY	VM DATE 1/7/70
DATE PRINTED	

APPROVED FOR SHOP
CHIEF DRAFTSMAN
CHIEF ENGINEER
REVISION NOTES
APPR. 3/4/70

BILLS MATERIAL NO. 150
CONT. CG736
S.O. B5725
DRAWING NO. 150

BRIDGE

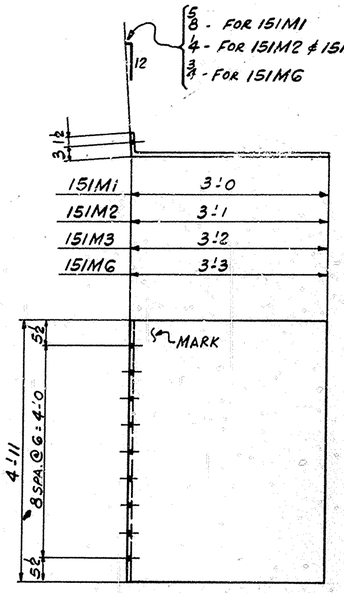

MAKE ONE PLATE MK-151M1
MAKE ONE PLATE MK-151M2
MAKE ONE PLATE MK 151M3
MAKE ONE PLATE MK 151M6
} BENT

NASHVILLE BRIDGE COMPANY

SHOP ORDER NO. B5725 — WORK ORDER NO. — CONTRACT NO. C6736

COMMONWEALTH OF KENTUCKY DEPT. OF HIGHWAYS
BRIDGE OVER NORTHWESTERN PARKWAY & 22ND ST. JEFFERSON COUNTY

BILL NO. 148 — DRAWING NO. 148 & 151

FABRICATION BESSEMER PLANT

ITEM — WEIGHTS BY — CHECKED BY

SHIP	SHIPPING MARK	ITEM QUANT	ASSEMBLY MARK	SHAPE	SECTION	FINISHED LENGTH FT IN	ORDERED LENGTH FT IN	P.O. NO.	ITEM NO.	REMARKS	SPECIF. WEIGHT	AISC WEIGHT	
					MATERIAL ASTM-A36 (U.N.)								
ONE	148C3				GIRDER								
		1	pa	PL	60½ × ⅜	36 0⅜	61×36'-5	3908	512				7/8
		1	pb	PL	60½ × ⅜	36 9⅜	61×37'-0	3908	511	PL 61×3'-6 MATCH CUT EA-PC & PA25			7/7
		1	pc	PL	24⅛ × 1	5 0		3910	306				7/2
		1	pd	PL	12 × 15/16	74.9⅞	734 CUTS GEN	3910	328				8/15
		1	pf	PL	12 × 15/16	73 4⅜	734 × 73'-4 CUTS 6	3910	330				8/17
		29	pk18	PL	4 × ⅜	4 11 15/16		3905	605	(FIE)			11/16
		4	pm18	PL	4 × ⅜	4 11 15/16							
		1	pn18	PL	4 × ⅜	4 11 15/16							
		1	pf21	PL	4 × ⅜	4 11 15/16		3905	605	(FIE)			11/16
		2	p9	PL	5½ × 13/16	5 0		3910	311	(FIE)(MIE)			10/29
		2	ph148	PL	5½ × 1	5 0		3910	304	(FIE)(MIE)			10/25
		2	p9141	PL	12¾ × ⅜	1 3		STK 3372	438	(BENT)			11/27
		2	pn8	PL	4 × ⅜	1 6½		3905	605				11/26
		2	pt98	PL	11 × ⅝	0 11		STK 3774	322				11/24
		1	fa	PL	10 × 1/16	1 0⅜		STK NASH.	616	COMM. GRADE			25/2
		1	fb	PL	12 × 1/16	1 0⅜		STK NASH.	616				25/3
		136			¾ϕ STUDS	0 4		27120	301	AUTO. END WELDED			
		2	1SP1		SOLE PL					DET. ON DWG. 1			
		10			⅞ϕ BOLTS	0 2½		2466	202	(A325) HEX. HD. HEX. NUT			
		10			HARD. WASHER FOR ⅞ϕ BOLTS				203	(A325)			
ONE	151M1	ONE		PL	59 × 4	3 4		STK 3476	602	BENT			
ONE	151M2	ONE		PL	59 × 4	3 5							
ONE	151M3	ONE		PL	59 × 4	3 6							
ONE	151M6	ONE		PL	59 × 4	3 7							
2	151M4	2		PL	59 × 4	3 84		STK 3476	602	BENT			
2	151M5	2		PL	59 × 4	3 64							

SHEET TOTAL

NASHVILLE BRIDGE COMPANY

SHOP ORDER NO. B5725 — WORK ORDER NO. — CONTRACT NO. C6736

COMMONWEALTH OF KENTUCKY DEPT. OF HIGHWAYS
BRIDGE OVER NORTHWESTERN PARKWAY & 22ND ST. JEFFERSON COUNTY

BILL NO. 149 — DRAWING NO. 149 & 151

FABRICATION BESSEMER PLANT

ITEM — WEIGHTS BY — CHECKED BY

SHIP	SHIPPING MARK	ITEM QUANT	ASSEMBLY MARK	SHAPE	SECTION	FINISHED LENGTH FT IN	ORDERED LENGTH FT IN	P.O. NO.	ITEM NO.	REMARKS	SPECIF. WEIGHT	AISC WEIGHT	
					MATERIAL ASTM-A36 (U.N.)								
ONE	149D3				GIRDER								
		1	pa	PL	60 1/16 × ⅜	41 5⅞	61×41'-8	3908	508				7/11
		1	pb	PL	60 1/16 × ⅜	42 2⅞	61×42'-5	3908	507	PL 61×3'-6 MATCH CUT 1 EA-PC & PA70			7/10
		1	pc	PL	24⅛ × 1	5 0		3910	306				7/2
		1	pd	PL	12 × 15/16	21 11⅞		3910	328				8/20
		1	pf	PL	12 × 15/16	21 11⅞		3910	311				8/20
		1	p9	PL	12 × 13/16	63 8½	734 CUTS GEN	3910	324				8/19
		1	ph	PL	12 × 13/16	62 3	85½ × 62'-5 CUTS 7	3910	325				8/22
		30	pk18	PL	4 × ⅜	4 11 15/16		3905	605	(FIE)			11/16
		4	pm18	PL	4 × ⅜	4 11 15/16							
		2	pn18	PL	4 × ⅜	4 11 15/16							
		1	pf21	PL	4 × ⅜	4 11 15/16		3905	605	(FIE)			11/16
		2	ph148	PL	5½ × 1	5 0		3910	304	(MIE)(FIE)			10/25
		2	pk	PL	5½ × 1	5 0		3910	304	(FIE)(MIE)			10/30
		2	p9141	PL	12¾ × ⅜	1 3		STK 3372	438	(BENT)			11/27
		2	pn8	PL	4 × ⅜	1 6½		3905	605				11/26
		2	pt98	PL	11 × ⅝	0 11		STK 3774	322				11/24
		160			¾ϕ STUDS	0 4		27120	301	AUTO. END WELDED			
		2	1SP1		SOLE PL					DET. ON DWG. 1			
		10			⅞ϕ BOLTS	0 2½		2466	202	(A325) HEX. HD. HEX. NUT			
		10			HARD. WASHER FOR ⅞ϕ BOLTS			2466	203	(A325)			

SHEET TOTAL

NASHVILLE BRIDGE COMPANY

SHOP ORDER NO. B5725 — WORK ORDER NO. — CONTRACT NO. C6736

COMMONWEALTH OF KENTUCKY DEPT. OF HIGHWAYS
BRIDGE OVER NORTHWESTERN PARKWAY & 22ND ST. JEFFERSON CO.

BILL NO. 150 — DRAWING NO. 150 & 151

FABRICATION BESSEMER PLANT

ITEM — WEIGHTS BY — CHECKED BY

SHIP	SHIPPING MARK	ITEM QUANT	ASSEMBLY MARK	SHAPE	SECTION	FINISHED LENGTH FT IN	ORDERED LENGTH FT IN	P.O. NO.	ITEM NO.	REMARKS	SPECIF. WEIGHT	AISC WEIGHT	
					MATERIAL ASTM-A36 (U.N.)								
ONE	150E3				GIRDER								
		1	pa	PL	60 15/16 × ⅜	47 2⅞	61×47'-4	3908	503				7/1
		1	pb	PL	60 15/16 × ⅜	47 10⅞	61×48'-1	3908	508	PL 61×3'-6 MATCH CUT 1-EA-PC & PA46			7/13
		1	pc	PL	24⅛ × 1	5 0		3910	306				7/2
		1	pd	PL	16 × 15/16	30 11⅞		3910	307				8/20
		1	pf	PL	12 × 15/16	66 1	734 CUTS GEN	3910	331				8/25
		1	p9	PL	16 × 15/16	30 11⅞		3910	307				8/24
		1	ph	PL	12 × 13/16	64 7½	734 × 65'-2 CUTS 6	3910	326				8/26
		35	pk18	PL	4 × ⅜	4 11 15/16		3905	605	(FIE)			11/16
		6	pm18	PL	4 × ⅜	4 11 15/16							
		1	pn18	PL	4 × ⅜	4 11 15/16							
		1	pf21	PL	4 × ⅜	4 11 15/16		3905	605	(FIE)			11/16
		2	pk	PL	7½ × ⅞	5 0		STK 3770	309	(FIE)(MIE)			10/25
		2	pm160	PL	5½ × 1/16	5 0		3910	334	(FIE)(MIE)			10/30
		2	p9141	PL	12¾ × ⅜	1 3		STK 3372	438	(BENT)			11/27
		2	pn8	PL	4 × ⅜	1 6½		3905	605				11/26
		2	pt98	PL	11 × ⅝	0 11		STK 3774	322				11/24
		180			¾ϕ STUDS	0 4		27120	301	AUTO. END WELDED			
		1	1SP3		SOLE PL					DET. ON DWG. 1			
		1	1SP1		SOLE PL					DET. ON DWG. 1			
		10			⅞ϕ BOLTS	0 2½		2466	202	(A325) HEX. HD. HEX. NUT			
		10			HARD. WASHER FOR ⅞ϕ BOLTS			2466	203	(A325)			

SHEET TOTAL

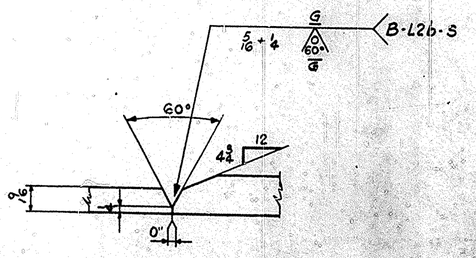

DETAIL "C"
(FOR GIRDER 149D3 & 150E3 ONLY)

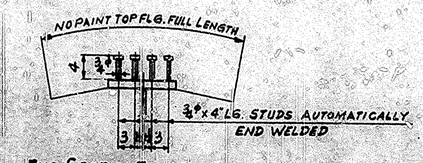

TYP. SECTION THRU TOP FLG.

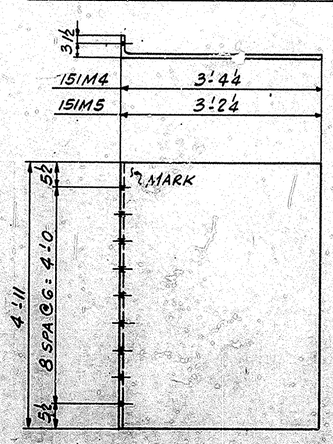

MAKE 2-PLATES MK-151M4
MAKE 2-PLATES MK-151M5

WORK THIS DWG WITH DWGS. 148, 149 & 150

FOR GENERAL NOTES SEE DWG GN1
MATL ASTM A36 (UN)

APPROVED FOR SHOP — CHIEF DRAFTSMAN — CHIEF ENGINEER — REVISION NOTES

GIRDER DETAILS SPAN 3W
BRIDGE OVER NORTHWESTERN PARKWAY
DEPT OF HIGHWAYS COMMONWEALTH OF KENTUCKY
JEFFERSON COUNTY FAP I-LF-2(132), SPSL-8273-7LP1
CONTRACTOR MATTINGLY BRIDGE CO.

NASHVILLE BRIDGE COMPANY
NASHVILLE, TENN.
BESSEMER PLANT

Hole Size 15/16 ϕ — Field Using 3/4 H.S.B. — Shop Paint SPA — Field GN1 — Drawn by G.D. — In Charge — Checked by — Date Printed

Bill's Material No. 148, 149, 150 — Job C6736 — S.O. B5725

160

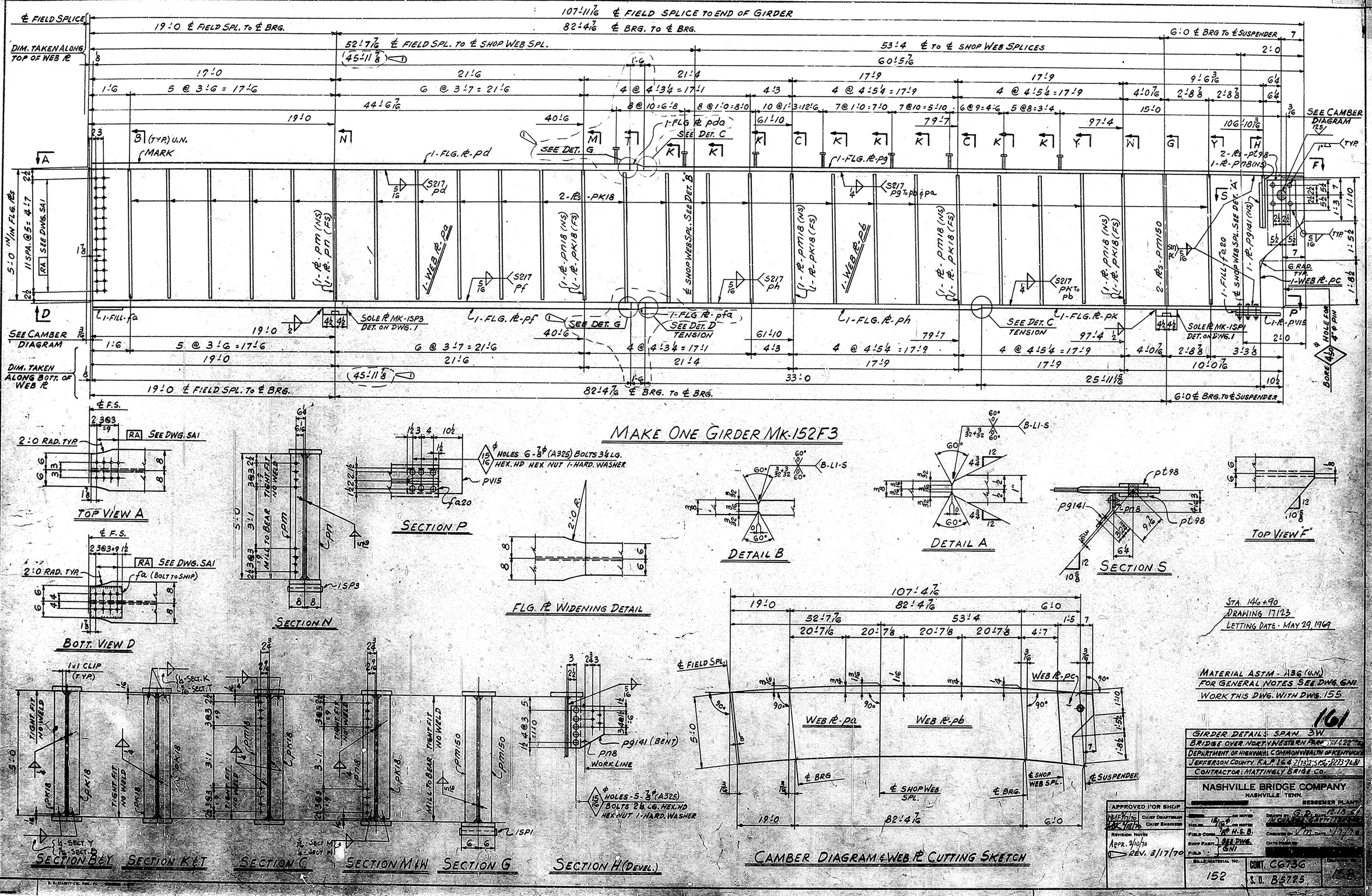

MAKE ONE GIRDER MK-152F3

STA. 146+90
DRAWING 171/23
LETTING DATE - MAY 29, 1969

MATERIAL ASTM - A36 (U.N.)
FOR GENERAL NOTES SEE DWG. GN1
WORK THIS DWG. WITH DWG. 155

161

GIRDER DETAILS: SPAN. 3W
BRIDGE OVER NORT'V WESTERN RR
DEPARTMENT OF HIGHWAYS, COMMONWEALTH OF KENTUCKY
JEFFERSON COUNTY, F.A.P. 164 (2/13)(3,5,6)-(223-7,8)
CONTRACTOR: MATTINGLY BRIDGE CO.

NASHVILLE BRIDGE COMPANY
NASHVILLE, TENN.
BESSEMER PLANT

APPROVED FOR SHOP
CHIEF DRAFTSMAN
CHIEF ENGINEER
REVISION NOTES
APPR. 2/10/70
REV. 3/17/70

BILL OF MATERIAL No. 152
CONT. CG736
S.O. B5725
152B

BRIDGE

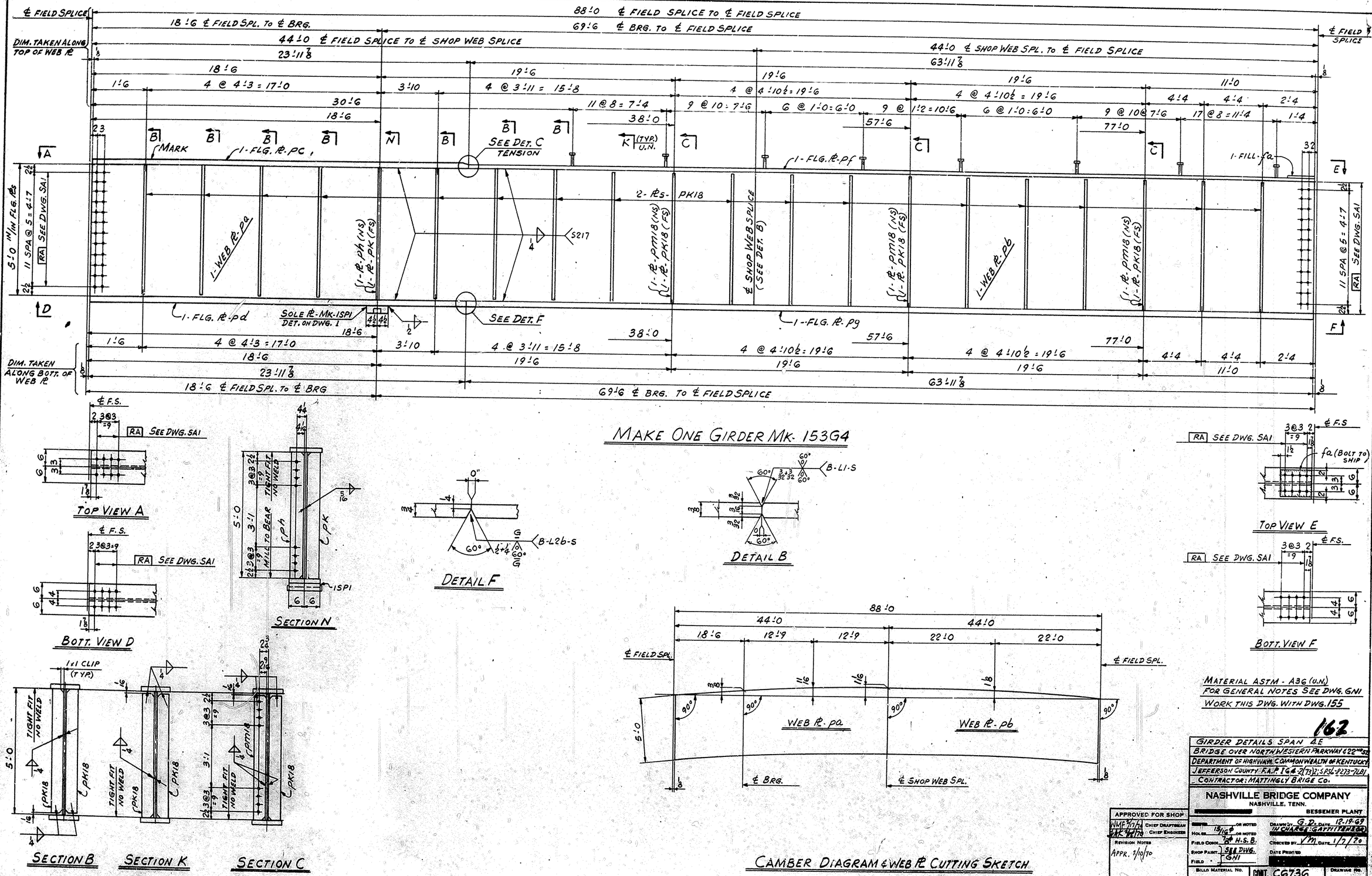

MAKE ONE GIRDER Mk. 153G4

CAMBER DIAGRAM & WEB PL CUTTING SKETCH

MATERIAL ASTM - A36 (U.N.)
FOR GENERAL NOTES SEE DWG. GN1
WORK THIS DWG. WITH DWG. 155

162

GIRDER DETAILS SPAN 4E
BRIDGE OVER NORTHWESTERN PARKWAY & 22ND ST.
DEPARTMENT OF HIGHWAYS COMMONWEALTH OF KENTUCKY
JEFFERSON COUNTY F.A.P. IG4-2(73)2; SPSL-9273-7L81
CONTRACTOR: MATTINGLY BRIDGE CO.

NASHVILLE BRIDGE COMPANY
NASHVILLE, TENN.
BESSEMER PLANT

APPROVED FOR SHOP
WMP 2/10/70 CHIEF DRAFTSMAN
WK 2/10/70 CHIEF ENGINEER
REVISION NOTES
APPR. 2/10/70

HOLES 15/16 ø OR NOTED
FIELD CONN. 7/8 ø H.S.B.
SHOP PAINT SEE DWG. GN1
FIELD

DRAWN BY G.D. DATE 12-19-69
IN CHARGE: GATTI-TENSON
CHECKED BY VM DATE 1/7/70
DATE PRINTED

BILLS MATERIAL NO. 153
CONT. C6736
S.O. B5725
DRAWING NO. 153

B. K. ELLIOTT CO. PGH., PA. REORDER A4873

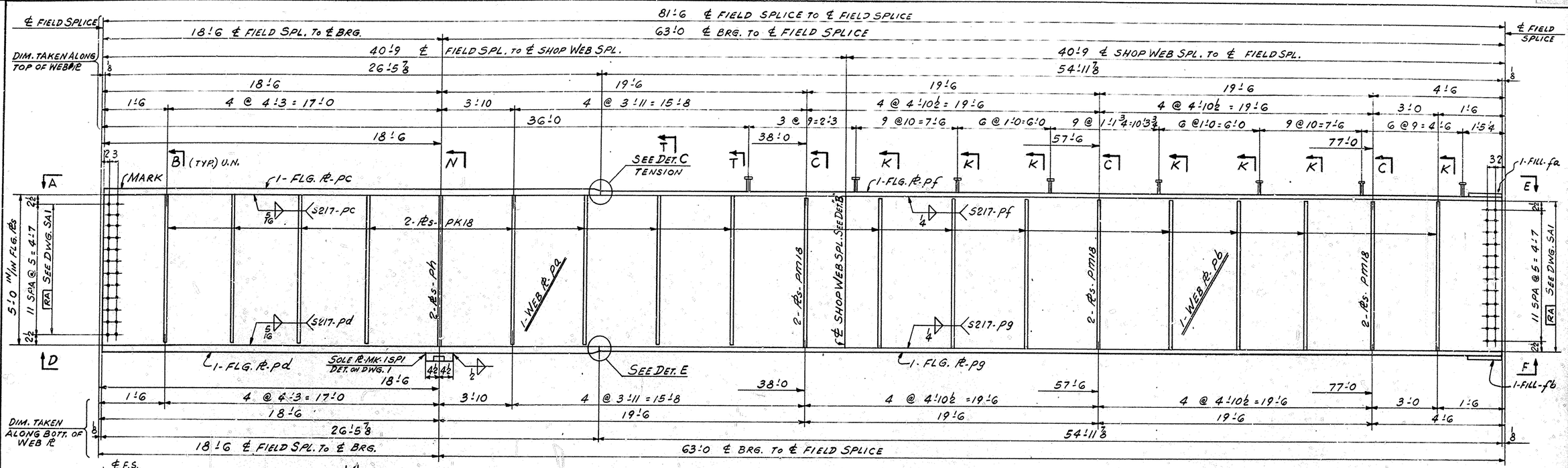

MAKE ONE GIRDER MK-154H4

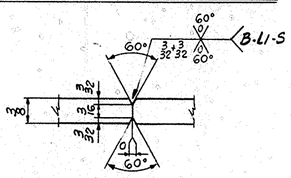

DETAIL B

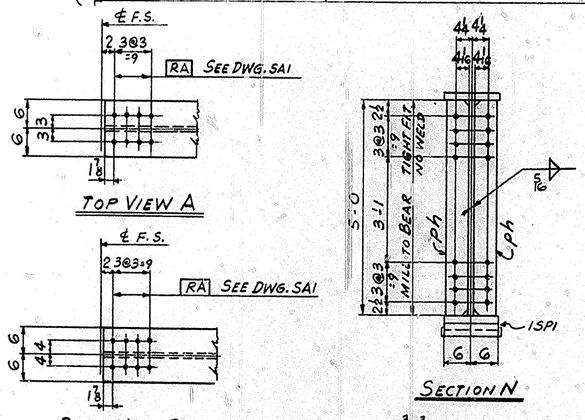

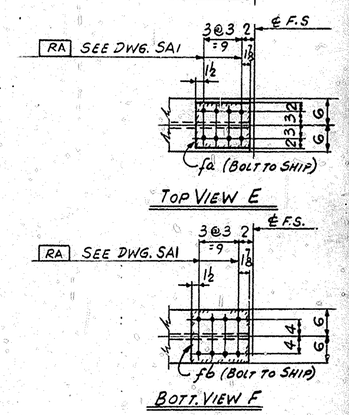

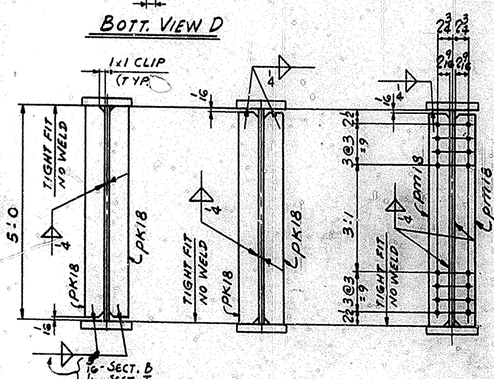

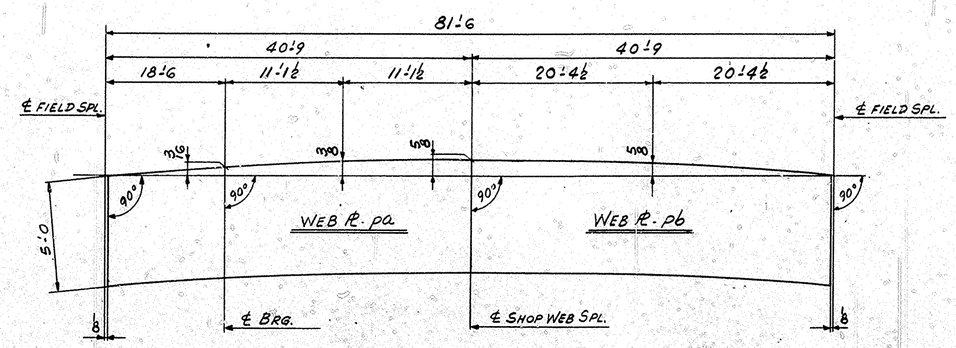

CAMBER DIAGRAM & WEB PL CUTTING SKETCH

MATERIAL ASTM - A36 (U.N.)
FOR GENERAL NOTES SEE DWG. GN1
WORK THIS DWG. WITH DWG. 155

163

GIRDER DETAILS SPAN 4E
BRIDGE OVER NORTH WESTERN PARKWAY & 22ND ST.
DEPARTMENT OF HIGHWAYS COMMONWEALTH OF KENTUCKY
JEFFERSON COUNTY F.A.P. 164 (73) & S.P. 56-273-76
CONTRACTOR: MATTINGLY BRIDGE CO.

NASHVILLE BRIDGE COMPANY
NASHVILLE, TENN.
BESSEMER PLANT

APPROVED FOR SHOP	
WLF 2/10/70 CHIEF DRAFTSMAN	
JHC 2/11/70 CHIEF ENGINEER	
REVISION NOTES	
APPR. 2/10/70	
HOLES 15/16" OR NOTED	
7/8" H.S.B. OR NOTED	
FIELD CONT.	
SHOP PAINT SEE DWG. GN1	
FIELD	
BILL MATERIAL NO. 154	
DRAWN BY G.D. DATE 12-19-69	
IN CHARGE: GATTI/ERSON	
CHECKED BY V.M. DATE 1/7/70	
DATE PRINTED	
CONT. C6736	
S.O. B5725	
DRAWING NO. 154	

BRIDGE

NASHVILLE BRIDGE COMPANY

SHOP ORDER NO. B5725 | WORK ORDER NO. | CONTRACT NO. C6736 | ITEM

COMMONWEALTH OF KENTUCKY DEPT. OF HIGHWAYS

BRIDGE OVER NORTHWESTERN PARKWAY & 22ND ST. JEFFERSON COUNTY

FABRICATION BESSEMER PLANT

BILL NO. 152 | DRAWING NO. 152 & 155

WEIGHTS BY | CHECKED BY

MATERIAL ASTM-A36 (U.N.)

ONE 152F3 GIRDER

1	pa	PL	61 1/16 × 3/8	52 7/16	61½×58-10	3902 419		7/17
1	pb	PL	61 1/16 × 3/8	53 3/8	61½×53-6	3902 418	PL 61×3-6 MATCH CUT 1-EA-pc & pb	7/16
1	pc	PL	24 7/16 × 1	5 0		3910 304		7/1
1	pd	PL	16 × 1/4	45 11/8		3910 230		9/3
1	pf	PL	16 × 1/4	45 11/8		3910 230		9/3
1	pg	PL	12 × 9/16	60 5/16	85¼ CUTS 7012	3910 325		9/2
1	ph	PL	12 × 9/16	33 0		3910 311		9/7
1	pk	PL	12 × 9/16	25 11/16	73¼ CUTS 6012	3910 332		9/8
46	PK18	PL	4 × 3/8	4 11/16		3905 605	(FIE)	11/16
2	pm18	PL	4 × 3/8	4 11/16		3905 605	(FIE)	11/16
2	pn18	PL	4 × 3/8	4 11/16		3905 605	(FIE)	11/16
1	pm	PL	7½ × 11/16	5 0		3910 233	(MIE)(FIE)	10/32
1	pn	PL	7½ × 11/16	5 0		3910 233	(MIE)(FIE)	10/32
2	pm15a	PL	5½ × 11/16	5 0		3910 234	(MIE)(FIE)	10/26
1	pn8	PL	4 × 3/8	1 6½		3905 605		11/26
1	pg141	PL	12¾ × 3/8	1 3		STK 3372 438	(BENT)	11/27
2	pc98	PL	11 × 5/8	0 11		STK 3474 372		11/24
1	pv15	PL	7 × 3/4	1 7		STK 2674 316		11/21
1	fa20	PL	7 × 9/16	0 10		3910 323		11/23
1	fa	PL	12 × 1/8	1 0⅜		STK 1440 615		25/4
1	pda	PL	16 × 1/4	1 6		3910 230		
1	pfa	PL	16 × 1/4	1 6		3910 230		
208			¾ϕ STUDS	0 4		27/20 301	AUTO END WELDED	
5			⅞ϕ BOLTS	0 2¼		26001 202 (A325)	HEX NUT HEX-HD	
6			⅞ϕ BOLTS	0 3¼		" 206 (A325)	HEX HD HEX NUT	
11			HARD. WASHERS FOR ⅞ϕ BOLTS			26001 203 (A325)		
1	ISP3		SOLE PL				DET. ON DWG. 1	
1	ISP1		SOLE PL				DET. ON DWG. 1	

SHEET TOTAL

NASHVILLE BRIDGE COMPANY

SHOP ORDER NO. B5725 | WORK ORDER NO. | CONTRACT NO. C6736

COMMONWEALTH OF KENTUCKY DEPT. OF HIGHWAYS

BRIDGE OVER NORTHWESTERN PARKWAY & 22ND ST. JEFFERSON CO.

FABRICATION BESSEMER PLANT

BILL NO. 153 | DRAWING NO. 153 & 155

MATERIAL ASTM-A36 (U.N.)

ONE 153G4 GIRDER

1	pa	PL	61 1/16 × 3/8	43 11/8	61½×44-2	3902 420		7/21
1	pb	PL	61 1/8 × 3/8	43 11/8	61½×44-2	3902 420		7/21
1	pc	PL	12 × 3/4	23 11/8		3910 313		9/11
1	pd	PL	12 × 3/4	23 11/8	73¼ CUTS 6012	3910 313		9/11
1	pf	PL	12 × 9/16	63 11/8	73¼ CUTS 6012	3910 324		9/12
1	pg	PL	12 × 3/4	63 11/8	73¼ CUTS 6012	3910 344		9/32
35	PK18	PL	4 × 3/8	4 11/16		3905 605	(FIE)	11/16
3	pm18	PL	4 × 3/8	4 11/16		3905 605	(FIE)	11/16
1	ph	PL	5½ × 1	5 0		3910 304	(MIE)(FIE)	10/25
1	pk	PL	5½ × 1	5 0		3910 304	(MIE)(FIE)	10/25
1	fa	PL	10 × 1/16	1 0⅜		STK 1434 616		23/2
272			¾ϕ STUDS	0 4		27/20 301	AUTO END WELDED	
1	ISP1		SOLE PL				DET. ON DWG. 1	

SHEET TOTAL

NASHVILLE BRIDGE COMPANY

SHOP ORDER NO. B5725 | CONTRACT NO. C6736

COMMONWEALTH OF KENTUCKY DEPT. OF HIGHWAYS

BRIDGE OVER NORTHWESTERN PARKWAY & 22ND ST. JEFFERSON CO.

FABRICATION BESSEMER PLANT

BILL NO. 154 | DRAWING NO. 154 & 155

MATERIAL ASTM-A36 (U.N.)

ONE 154H4 GIRDER

1	pa	PL	60⅝ × ⅜	40 8⅞	61×40-11	3902 510		7/24
1	pb	PL	60⅝ × ⅜	40 8⅞	61×40-11	3902 510		7/24
1	pc	PL	12 × 15/16	26 5⅞		3910 307		9/17
1	pd	PL	12 × 15/16	26 5⅞		3910 307		9/17
1	pf	PL	12 × 9/16	54 11⅞	85¼ CUTS 7012	3910 326		9/18
1	pg	PL	12 × 5/8	54 11⅞	73¼ CUTS 6012	3910 318		9/19
30	PK18	PL	4 × ⅜	4 11 15/16		3905 605	(FIE)	11/16
6	pm18	PL	4 × ⅜	4 11 15/16		3905 605	(FIE)	11/16
2	ph	PL	5½ × 11/16	5 0		3910 234	(MIE)(FIE)	10/26
1	fa	PL	10 × 1/4	1 0⅜		STK 3476 602		25/7
1	fb	PL	12 × 3/16	1 0⅜		STK 3945 614		27/6
196			¾ϕ STUDS	0 4		27/20 301	AUTO END WELDED	
1	ISP1		SOLE PL				DET. ON DWG. 1	

SHEET TOTAL

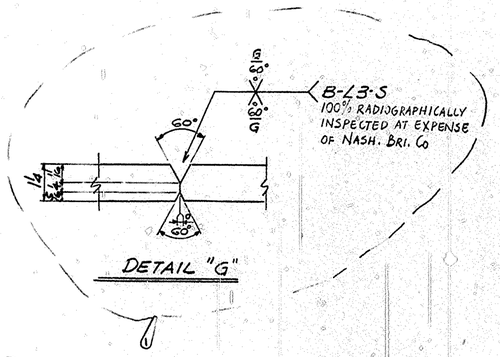

DETAIL "G"

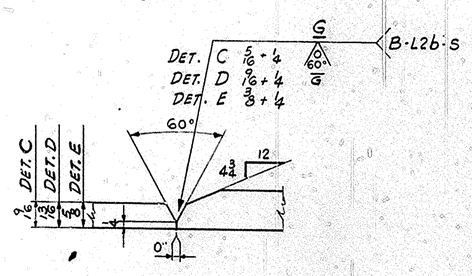

DETAIL "C"

DETAIL "D" (FOR 152F3 ONLY)

DETAIL E (FOR 154H4 ONLY)

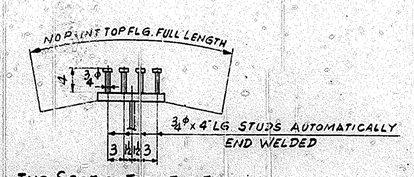

TYP. SECTION THRU TOP FLG.

WORK THIS DWG WITH DWGS. 152, 153 & 154

FOR GENERAL NOTES, SEE DWG GN1

MATL ASTM A36 (UN)

164

GIRDER DETAILS SPAN 3W & 4E

BRIDGE OVER NORTH WESTERN PARKWAY & 22ND ST.

DEPT. OF HIGHWAYS COMMONWEALTH OF KENTUCKY

JEFFERSON COUNTY FAP IGA 2(73); S436-8273-7(81)

CONTRACTOR MATTINGLY BRIDGE CO.

NASHVILLE BRIDGE COMPANY

NASHVILLE, TENN.

BESSEMER PLANT

APPROVED FOR SHOP: CHIEF DRAFTSMAN | CHIEF ENGINEER

REVISION NOTES: 1 REV. 5/17/70

HOLES 15/16ϕ OR NOTED | FIELD CONN 7/8" H.S.B. OR NOTED | SHOP PAINT | FIELD — SEE GN1

DRAWN BY G.D. DATE 10-19-69 | IN CHARGE GATTI

CHECKED BY DATE 1/7/70 | DATE PRINTED

BILLS MATERIAL NO. 152, 153, 154 | CONT. C6736 | S.O. B5725 | DRAWING NO. 155

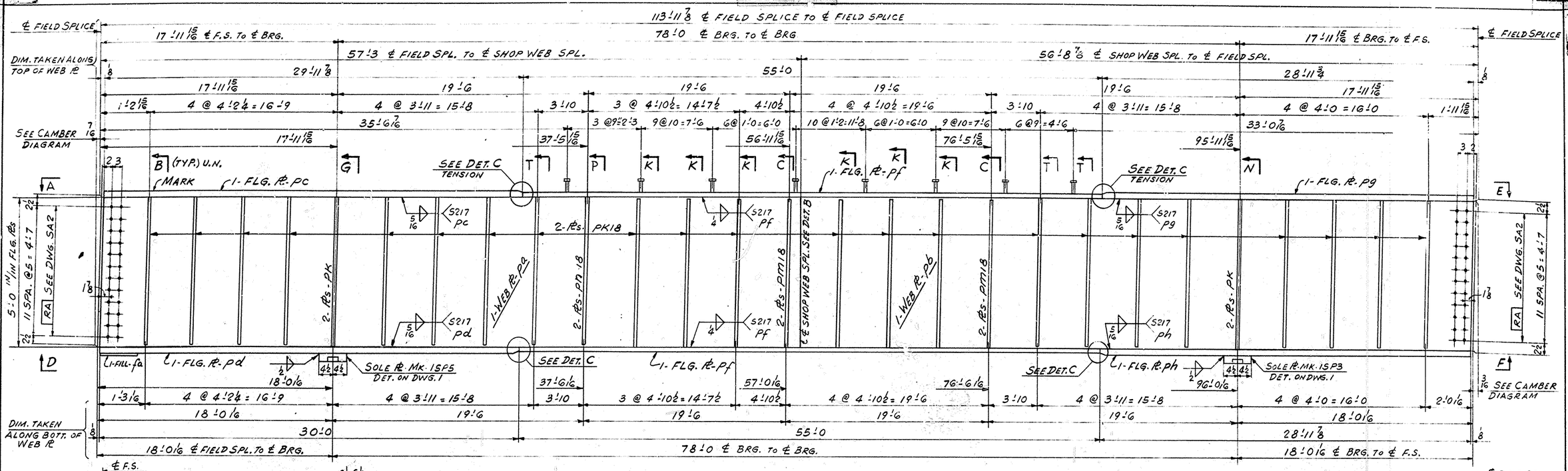

MAKE ONE GIRDER MK-156J4

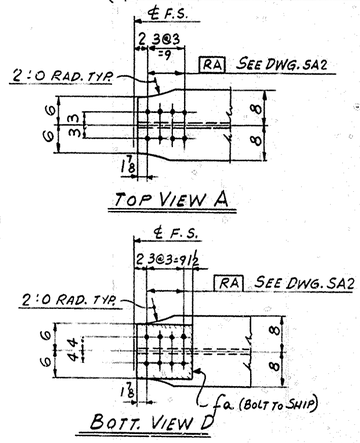

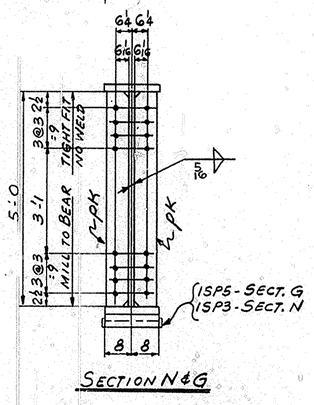

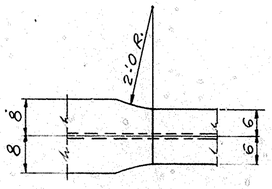

FLG. PL WIDENING DETAIL

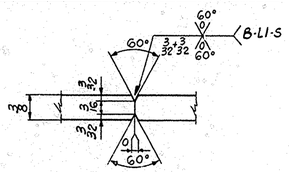

DETAIL B

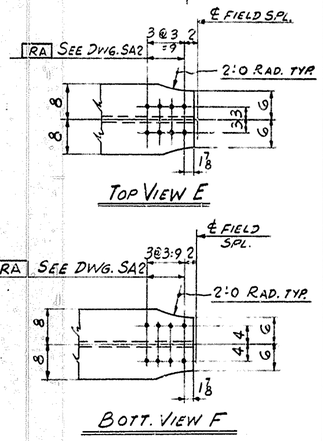

MATERIAL ASTM - A36 (U.N.)
FOR GENERAL NOTES SEE DWG. GN1
WORK THIS DWG. WITH DWG. 159

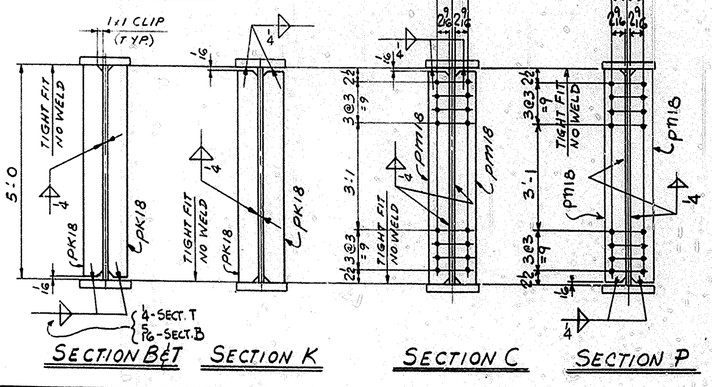

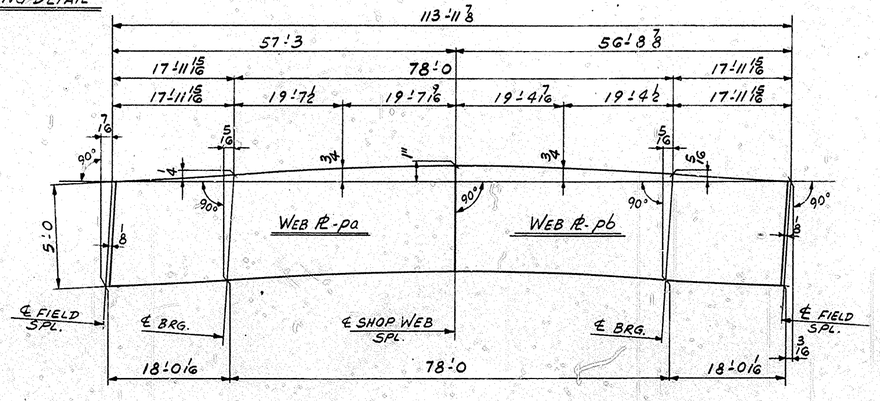

CAMBER DIAGRAM & WEB PL CUTTING SKETCH

APPROVED FOR SHOP	
NME 2/17/70	CHIEF DRAFTSMAN
JAK 2/18/70	CHIEF ENGINEER
REVISION NOTES	
APR. 2/10/70	

GIRDER DETAILS SPAN 4E
BRIDGE OVER NORTH WESTERN PARKWAY & 22nd ST.
DEPARTMENT OF HIGHWAYS, COMMONWEALTH OF KENTUCKY
JEFFERSON COUNTY F.A.P. 164 2(12) 2.5(56) 273-7(81)
CONTRACTOR: MATTINGLY BRIDGE CO.

NASHVILLE BRIDGE COMPANY
NASHVILLE, TENN.
BESSEMER PLANT

HOLES: 15/16" ϕ OR NOTED; 7/8" ϕ H.S.B.
FIELD CONN.
SHOP PAINT } SEE DWG. GN1
FIELD

DRAWN BY G.D. DATE 12-23-69
IN CHARGE: G.A. TITTLE (SOR)
CHECKED BY V.P. DATE 1/7/70
DATE PRINTED

BILLS MATERIAL NO	CONT.	DRAWING NO.
156	CG736	156
	S.O. B5725	

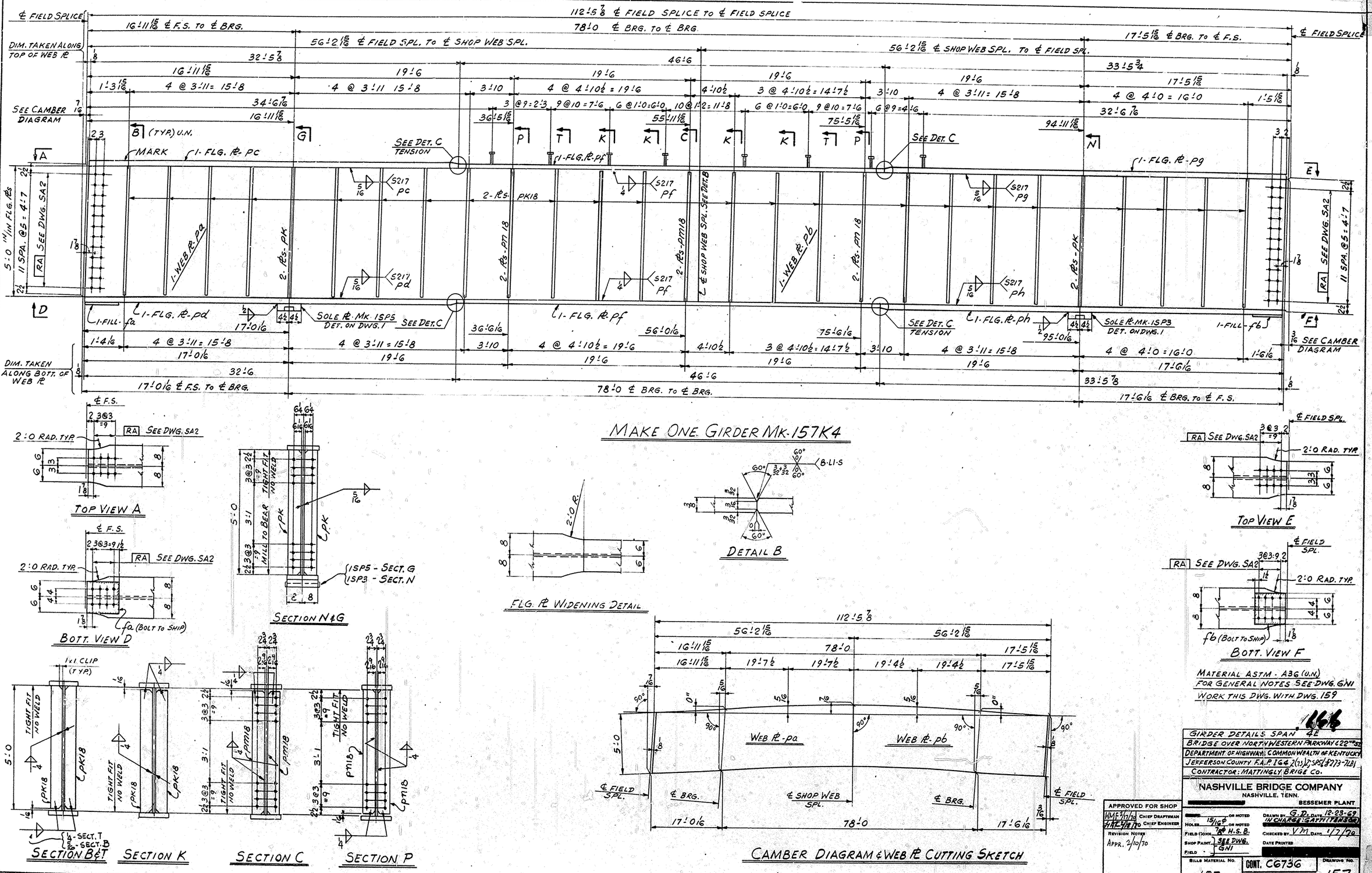

MAKE ONE GIRDER MK-157K4

CAMBER DIAGRAM & WEB PL CUTTING SKETCH

MATERIAL ASTM - A36 (U.N.)
FOR GENERAL NOTES SEE DWG. GN1
WORK THIS DWG. WITH DWG. 159

166

GIRDER DETAILS SPAN 4E
BRIDGE OVER NORTH WESTERN PARKWAY @ 22ND ST.
DEPARTMENT OF HIGHWAY, COMMONWEALTH OF KENTUCKY
JEFFERSON COUNTY F.A.P. I64-2(13)2; SPS(87)73-7181
CONTRACTOR: MATTINGLY BRIDGE CO.

NASHVILLE BRIDGE COMPANY
NASHVILLE, TENN.
BESSEMER PLANT

DRAWN BY G.D. DATE 12-23-69	IN CHARGE: GATTI (PENSON)
CHECKED BY V.M. DATE 1/7/70	DATE PRINTED
BILLS MATERIAL NO. 157	CONT. CG736 S.O. B5725
DRAWING NO. 157	

APPROVED FOR SHOP
WMF 2/17/70 CHIEF DRAFTSMAN
JAE 2/18/70 CHIEF ENGINEER
REVISION NOTES
APPR. 2/10/70

HOLES 15/16 ϕ OR NOTED
FIELD CONN. 7/8 ϕ H.S.B.
SHOP PAINT } SEE DWG. GN1
FIELD

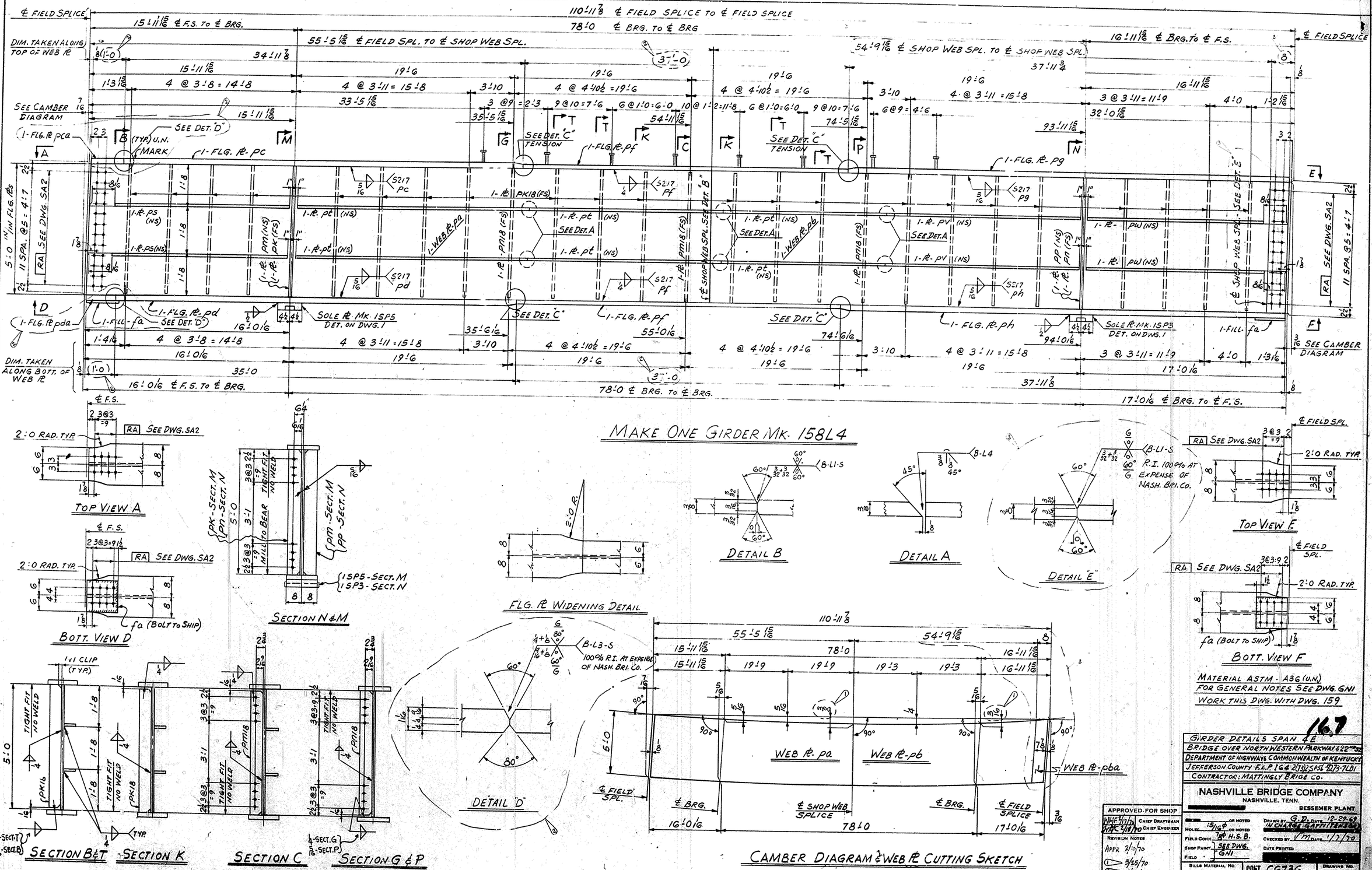

MAKE ONE GIRDER MK. 158L4

MATERIAL ASTM - A36 (U.N.)
FOR GENERAL NOTES SEE DWG. GN1
WORK THIS DWG. WITH DWG. 159

167

GIRDER DETAILS SPAN 4E
BRIDGE OVER NORTHWESTERN PARKWAY & 22nd ST.
DEPARTMENT OF HIGHWAYS COMMONWEALTH OF KENTUCKY
JEFFERSON COUNTY F.A.P. 164 2(73) SPSL 2173-7.01
CONTRACTOR: MATTINGLY BRIDGE CO.

NASHVILLE BRIDGE COMPANY
NASHVILLE, TENN.
BESSEMER PLANT

APPROVED FOR SHOP
KWF 7/7/70 CHIEF DRAFTSMAN
JAC 7/10/70 CHIEF ENGINEER
REVISION NOTES
APPR 2/10/70
1 3/25/70
2 4/20/70
3 5/7/70

HOLES 15/16 ø OR NOTED
FIELD CONN. 7/8 ø H.S.B. OR NOTED
SHOP PAINT SEE DWG. GN1
FIELD
BILLS MATERIAL NO. 158

DRAWN BY G.D. DATE 12-29-69
IN CHARGE (ATTY) (ENG.)
CHECKED BY VM DATE 1/7/70
DATE PRINTED
CONT. CG736
S.O. B5725
DRAWING NO. 158

BRIDGE

NASHVILLE BRIDGE COMPANY

SHOP ORDER NO. B5725 | WORK ORDER NO. | CONTRACT NO. C6736

COMMONWEALTH OF KENTUCKY DEPT. OF HIGHWAYS

BRIDGE OVER NORTHWESTERN PARKWAY & 22ND ST. JEFFERSON COUNTY

BILL NO. 156 | DRAWING NO. 156 & 159

FABRICATION BESSEMER PLANT

ITEM | WEIGHTS BY | CHECKED BY

SHIP	SHIPPING MARK	ITEM QUANT.	ASSEMBLY MARK	SYMB.	SECTION	FINISHED LENGTH	ORDERED LENGTH	P.O. NO.	ITEM NO.	REMARKS	DATE	WEIGHT
					MATERIAL ASTM-A36							
ONE	156L4				GIRDER							
		1	pa	PL	61 × 3/8	57 3 5/16	61 × 57-4	3908	434		7/28	
		1	pb	PL	61 × 3/8	56 8 3/4	61 × 57-4	3908	434		7/28	
		1	pc	PL	16 × 13/16	29 11 7/8	65 × 30-12 CUTS 4	3910	310		9/26	
		1	pd	PL	16 × 13/16	30 0	65 × 30-12 CUTS 4	3910	310		9/26	
		2	pf	PL	12 × 9/16	55 0	85 CUTS 78-12	3910	326		9/27	
		1	pg	PL	16 × 13/16	28 11 3/4	65 CUTS 4-4K	3910	310		9/28	
		1	ph	PL	16 × 13/16	28 11 3/4	65 CUTS 4-4K	3910	310		9/28	
		44	pk18	PL	4 × 3/8	4 11 15/16		3905	605	(FIE)	11/16	
		4	pk	PL	7 1/2 × 13/16	5 0		3910	311	(MIE)(FIE)	11/-	
		4	pm18	PL	4 × 3/8	4 11 15/16		3905	605	(FIE)	11/-	
		1	fa	PL	12 × 1/16	1 0 3/8		STK	MISC. 646		25/13	
		2	pm18	PL	4 × 3/8	4 11 15/16		3905	605	(FIE)		
		200			3/4 ϕ STUDS	0 4		27120	301	AUTO END WELDED		
		1	15P5		SOLE PL					DET. ON DWG. 1		
		1	15P3		SOLE PL							

SHEET TOTAL

NASHVILLE BRIDGE COMPANY

SHOP ORDER NO. B5725 | WORK ORDER NO. | CONTRACT NO. C6736

COMMONWEALTH OF KENTUCKY DEPT. OF HIGHWAYS

BRIDGE OVER NORTHWESTERN PARKWAY & 22ND ST. JEFFERSON COUNTY

BILL NO. 157 | DRAWING NO. 157 & 159

FABRICATION BESSEMER PLANT

ITEM | WEIGHTS BY | CHECKED BY

SHIP	SHIPPING MARK	ITEM QUANT.	ASSEMBLY MARK	SYMB.	SECTION	FINISHED LENGTH	ORDERED LENGTH	P.O. NO.	ITEM NO.	REMARKS	DATE	WEIGHT
					MATERIAL ASTM-A36							
ONE	157L4				GIRDER							
		1	pa	PL	60 7/16 × 3/8	56 3/4	60½ × 56-4	3908	518			
		1	pb	PL	60 7/16 × 3/8	56 2 13/16	60½ × 56-4	3908	518			
		1	pc	PL	16 × 13/16	32 5/8		3910	307			
		1	pd	PL	16 × 13/16	32 6		3910	307			
		2	pf	PL	12 × 9/16	46 6	73¼ CUTS 6-8 12	3910	332			
		1	pg	PL	16 × 1	33 5 3/4		3910	305			
		1	ph	PL	16 × 1	33 5 3/4		3910	305			
		44	pk18	PL	4 × 3/8	4 11 15/16		3905	605	(FIE)		
		4	pk	PL	7 1/2 × 3/8	5 0		STK 3790	309	(MIE)(FIE)		
		2	pm18	PL	4 × 3/8	4 11 15/16		3905	605	(FIE)		
		1	fa	PL	12 × 9/16	1 0 3/8		STK 2873	601			
		1	fb	PL	12 × 1/4	1 0 3/8		STK 3870	602			
		4	pm18	PL	4 × 3/8	4 11 15/16		3905	605	(FIE)		
		200			3/4 ϕ STUDS	0 4		27120	301	AUTO. END WELDED		
		1	15P5		SOLE PL					DET. ON DWG. 1		
		1	15P3		SOLE PL							

SHEET TOTAL

NASHVILLE BRIDGE COMPANY

SHOP ORDER NO. B5725 | WORK ORDER NO. | CONTRACT NO. C6736

COMMONWEALTH OF KENTUCKY DEPT. OF HIGHWAYS

BRIDGE OVER NORTHWESTERN PARKWAY & 22ND ST. JEFFERSON CO.

BILL NO. 158 | DRAWING NO. 158 & 159

FABRICATION BESSEMER PLANT

ITEM | WEIGHTS BY

SHIP	SHIPPING MARK	ITEM QUANT.	ASSEMBLY MARK	SYMB.	SECTION	FINISHED LENGTH	ORDERED LENGTH	P.O. NO.	ITEM NO.	REMARKS	DATE	WEIGHT
					MATERIAL ASTM-A36							
ONE	158L4				GIRDER							
		1	pa	PL	60 9/16 × 3/8	55 6 3/4	60½ × 55-4	3908	517		7/32	
		1	pb	PL	60 3/8 × 3/8	54 9 15/16		3908	517		7/32	
		1	pc	PL	16 × 1 1/16	34 11 7/8		3910	234		10/4	
		1	pd	PL	16 × 1 1/16	35 0		3910	234		10/4	
		2	pf	PL	12 × 9/16	37 0	98 CUTS 8 @ 12	3910	323		10/5	
		1	pg	PL	16 × 1 3/16	37 11 3/4	32¼ × 38¼ CUTS 2	3910	231		10/6	
		1	ph	PL	16 × 1 3/16	37 11 3/4	32¼ × 38¼ CUTS 2	3910	231		10/6	
		22	pk18	PL	4 × 3/8	4 11 15/16		3905	605	(FIE)	10/6	
		1	pm18	PL	4 × 3/8	4 11 15/16		3905	605	(FIE)	10/31	
		2	pm18	PL	4 × 3/8	4 11 15/16		3905	605	(FIE)	11/16	
		1	pk	PL	7 1/2 × 15/16	5 0		3910	307	(MIE)(FIE)	11/16	
		1	pm	PL	7 1/2 × 15/16	5 0		3910	307		11/12	
		1	pn	PL	7 1/2 × 1	5 0		3910	305		11/12	
		1	pp	PL	7 1/2 × 1	5 0		3910	305	(MIE)(FIE)	11/13	
		2	ps	PL	4 × 3/8	15 2 7/8		3905	605		11/13	
		6	pt	PL	4 × 3/8	20 0					11/15	
		2	pv	PL	4 × 3/8	17 9 3/8						
		2	pw	PL	4 × 3/8	16 2 7/8		3905	605		11/15	
		2	fa	PL	12 × 9/16	1 0 3/8	73¼ CUTS 6 @ 12	3910	331		25/13	
		1	pca	PL	16 × 1 1/16	1 0		STK				
		1	pda	PL	16 × 1 1/16	1 0						
		200			3/4 ϕ STUDS	0 4		27120	301	AUTO. END WELDED		
		1	pba	PL	60 × 3/8	0 7 3/8		STK				
		1	15P5		SOLE PL							
		1	15P3		SOLE PL					DET. ON DWG. 1		

SHEET TOTAL

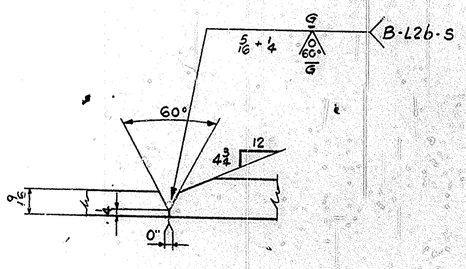

DETAIL "C"

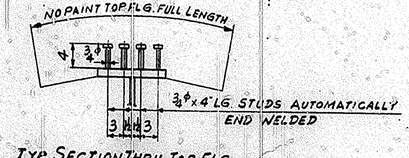

TYP. SECTION THRU TOP FLG.

WORK THIS DWG WITH DWGS. 156, 157 & 158

FOR GENERAL NOTES SEE DWG GN1

MATL ASTM A36 (UN)

16.8

GIRDER DETAILS SPAN 4E

BRIDGE OVER NORTH WESTERN PARKWAY & 22ND ST.

DEPT. OF HIGHWAYS COMMONWEALTH OF KENTUCKY

JEFFERSON COUNTY FAP IG42-2(73)2; SPSL & P273-7LN

CONTRACTOR MATTINGLY BRIDGE CO.

NASHVILLE BRIDGE COMPANY
NASHVILLE, TENN.
BESSEMER PLANT

APPROVED FOR SHOP
NMF 3/10/70 CHIEF DRAFTSMAN
HAC 3/10/70 CHIEF ENGINEER

REVISION NOTES
APPR. 3/10/70
4/30/70
5/7/70

HOLES 15/16 ϕ OR NOTED
FIELD CONN. 7/8 ϕ H.S.B.
SHOP PAINT / FIELD } SEE GN1

DRAWN BY G.D. DATE 12-29-69
IN CHARGE GATTI (TENSOR)
CHECKED BY DM DATE 1/7/70
DATE PRINTED

BILLS MATERIAL NO. 156, 157, 158
CONT. C6736
S.O. B5725
DRAWING NO. 159

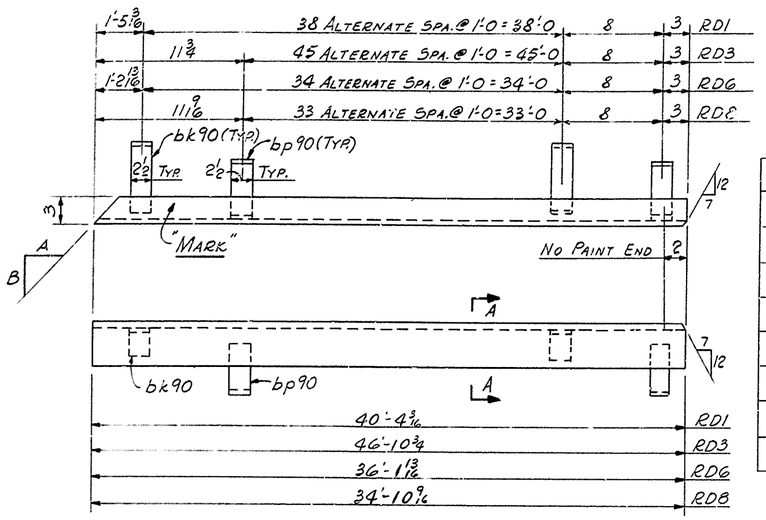

MARK	A	B
RD1	12	12
RD2	11 5/8	12
RD3	11 9/16	12
RD4	9 3/16	12
RD5	12	10 7/16
RD6	12	10 7/16
RD7	12	10 7/16
RD8	12	10 7/16

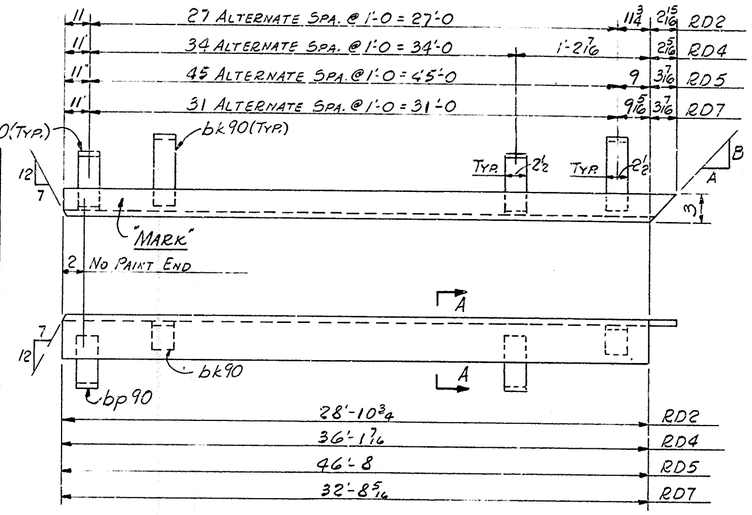

MAKE ONE ROADWAY DAM MARK 160RD6 AS SHOWN
MAKE ONE ROADWAY DAM MARK 160RD8 AS SHOWN
MAKE ONE ROADWAY DAM MARK 160RD1 OPP. HAND
MAKE ONE ROADWAY DAM MARK 160RD3 OPP. HAND

MAKE ONE ROADWAY DAM MARK 160RD5 AS SHOWN
MAKE ONE ROADWAY DAM MARK 160RD7 AS SHOWN
MAKE ONE ROADWAY DAM MARK 160RD2 OPP. HAND
MAKE ONE ROADWAY DAM MARK 160RD4 OPP. HAND

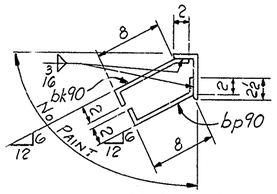

SECTION A-A

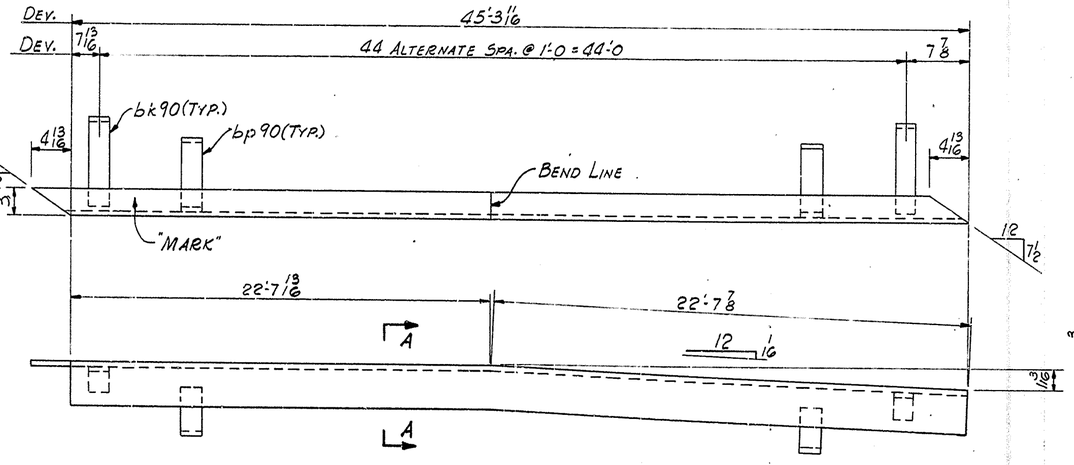

MAKE ONE ROADWAY DAM MARK 160RD9

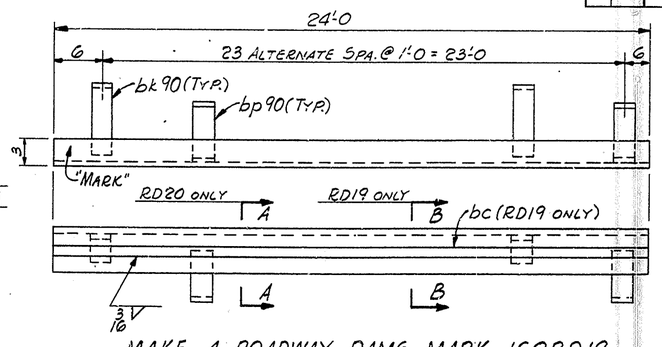

MAKE 4 ROADWAY DAMS MARK 160RD19
MAKE ONE ROADWAY DAM MARK 160RD20

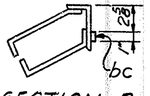

SECTION B-B

DIMENSIONS AND DETAILS SIMILAR TO SECT. A-A EXCEPT AS SHOWN.

NOTES:
ALL MATERIAL ASTM A36.
FOR GENERAL NOTES SEE DWG. GN1.

NASHVILLE BRIDGE COMPANY

SHOP ORDER NO. B-5728
WORK ORDER NO.
CONTRACT NO. C-6736

COMMONWEALTH OF KENTUCKY, DEPT. OF HIGHWAYS, BRIDGE OVER NORTHWESTERN PKWY & 22ND ST. JEFFERSON COUNTY

BILL NO. 160
DRAWING NO. 160

FABRICATION BESSEMER PLANT

ITEM
WEIGHTS BY
CHECKED BY

SHOP	SHIPPING MARK	ITEM QUANT	ASSEMBLY MARK		SECTION	FINISHED LENGTH FT.	FINISHED LENGTH IN.	ORDERED LENGTH FT.	ORDERED LENGTH IN.	P.O. NO.	ITEM NO.	REMARKS	SPECIF. WEIGHT	ACTUAL WEIGHT	
					MAT. A57M A36										
ONE	160 RD6	ONE		L	5×3×3/8	36	11 3/16	36'-6		3926	125	AS SHOWN			2 1/12
		18	bk90	PL	2½×7/16	1	0			3919	607	BENT			
		18	bp90	PL	2½×3/16	1	0			3919	607	BENT			
ONE	160 RD8	ONE		L	5×3×3/8	34	10 3/16	35'-0		3926	126	AS SHOWN			2 1/126
		17	bk90	PL	2½×7/16	1	0			3919	607	BENT			
		18	bp90	PL	2½×3/16	1	0			3919	607	BENT			
ONE	160 RD1	ONE		L	5×3×3/8	40	4 3/16	40'-6		3926	123	OPP. HAND			1 9/11
		20	bk90	PL	2½×7/16	1	0			3919	607	BENT			
		20	bp90	PL	2½×3/16	1	0			3919	607	BENT			
ONE	160 RD3	ONE		L	5×3×3/8	46	10 3/16	47'-0		3926	121	OPP. HAND			1 8/10
		23	bk90	PL	2½×7/16	1	0			3919	607	BENT			
		24	bp90	PL	2½×3/16	1	0			3919	607	BENT			
ONE	160 RD5	ONE		L	5×3×3/8	46	11 1/16	47'-6		3926	121	AS SHOWN			2 1/5
		23	bk90	PL	2½×7/16	1	0			3919	607	BENT			
		23	bp90	PL	2½×3/16	1	0			3919	607	BENT			
ONE	160 RD7	ONE		L	5×3×3/8	32	11 3/16	33'-0		3926	128	AS SHOWN			2 1/9
		16	bk90	PL	2½×7/16	1	0			3919	607	BENT			
		16	bp90	PL	2½×3/16	1	0			3919	607	BENT			
ONE	160 RD2	ONE		L	5×3×3/8	29	11 1/16	29'-6		3926	129	OPP. HAND			1 5/6
		14	bk90	PL	2½×7/16	1	0			3919	607	BENT			
		14	bp90	PL	2½×3/16	1	0			3919	607	BENT			
ONE	160 RD4	ONE		L	5×3×3/8	36	3 3/16	36'-6		3926	125	OPP. HAND			1 9/65
		18	bk90	PL	2½×7/16	1	0			3919	607	BENT			1 9/64
		17	bp90	PL	2½×3/16	1	0			3919	607	BENT			
ONE	160 RD9	ONE		L	5×3×3/8	45	8½	46'-0		3926	122	BENT			
		23	bk90	PL	2½×7/16	1	0			3919	607	BENT			2 7/8
		22	bp90	PL	2½×3/16	1	0			3919	607	BENT			2 6/8
4	160 RD19	4		L	5×3×3/8	24	0			3926	119				2 31/32
		48	bk90	PL	2½×7/16	1	0			3919	607	BENT			2 29/8
		48	bp90	PL	2½×3/16	1	0			3919	607	BENT			2 28/8
		4	bc	PL	1"×7/16	24	0			3912	608	STOP SQUEE TO SUIT MAT'L			2 27/33
ONE	160 RD20	ONE		L	5×3×3/8	24	0			3901	187				2 31/32
		12	bk90	PL	2½×7/16	1	0			3919	607	BENT			2 29/8
		12	bp90	PL	2½×3/16	1	0			3919	607	BENT			2 28/8

SHEET TOTAL

ROADWAY DAMS
BRIDGE OVER NORTHWESTERN PKWY & 22ND ST.
DEPT. OF HIGHWAYS, COMMONWEALTH OF KENTUCKY
JEFFERSON CTY., F.A.P. [G4-2(79)2; 5P56-8273-7LB1]
CONTRACTOR: MATTINGLY BRIDGE CO.

NASHVILLE BRIDGE COMPANY
NASHVILLE, TENN.
BESSEMER PLANT

APPROVED FOR SHOP
NME 3/6/70 CHIEF DRAFTSMAN
MAR 3/11/70 CHIEF ENGINEER
REVISION NOTES

RIVETS NONE OR NOTED
HOLES NONE OR NOTED
FIELD CONN. SEE GN1
SHOP PAINT
FIELD

DRAWN BY J.B. DATE 1-12-70
IN CHARGE: GATTI (TONSOR)
CHECKED BY VM DATE 1/26/70
DATE PRINTED

BILLS MATERIAL NO. 160
CONT. C6736
S.O. B-5728
DRAWING NO. 160

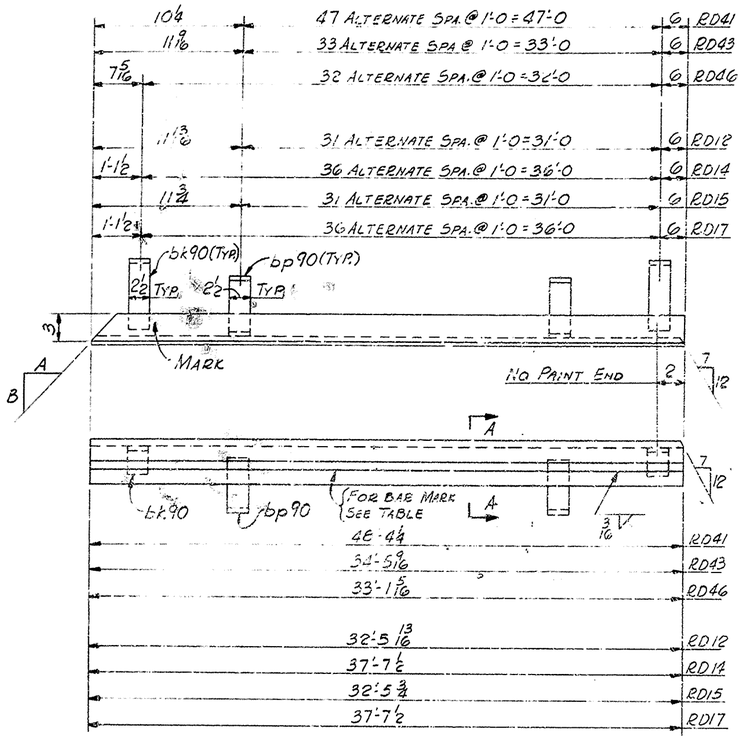

MARK	A	B	BAR MARK
RD11	11 1/2	12	bc
RD12	11 1/8	12	bd
RD13	11 1/8	12	bf
RD14	9 3/16	12	bg
RD15	11 1/2	12	bh
RD16	11 1/8	12	bk
RD17	11 1/8	12	bm
RD18	9 3/16	12	bn
RD41	12	10 7/16	bp
RD42			bs
RD43			bt
RD44			bv
RD45			bw
RD46			bx

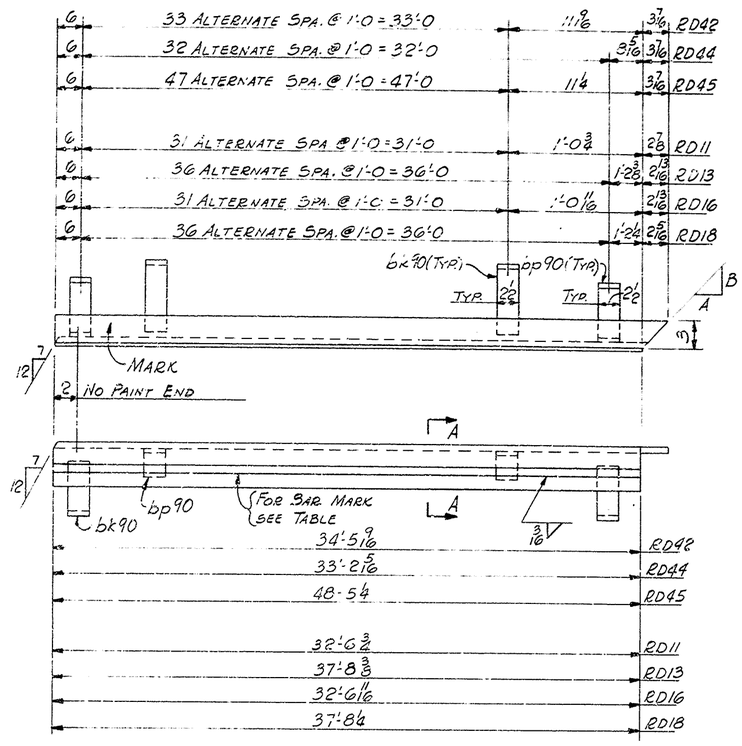

MAKE ONE ROADWAY DAM MARK 161RD41 AS SHOWN
MAKE 2 ROADWAY DAMS MARK 161RD43 AS SHOWN
MAKE ONE ROADWAY DAM MARK 161RD46 AS SHOWN
MAKE ONE ROADWAY DAM MARK 161RD12 OPP. HAND
MAKE ONE ROADWAY DAM MARK 161RD14 OPP. HAND
MAKE ONE ROADWAY DAM MARK 161RD15 OPP. HAND
MAKE ONE ROADWAY DAM MARK 161RD17 OPP. HAND

MAKE 2 ROADWAY DAMS MARK 161RD42 AS SHOWN
MAKE ONE ROADWAY DAM MARK 161RD44 AS SHOWN
MAKE ONE ROADWAY DAM MARK 161RD45 AS SHOWN
MAKE ONE ROADWAY DAM MARK 161RD11 OPP. HAND
MAKE ONE ROADWAY DAM MARK 161RD13 OPP. HAND
MAKE ONE ROADWAY DAM MARK 161RD16 OPP. HAND
MAKE ONE ROADWAY DAM MARK 161RD18 OPP. HAND

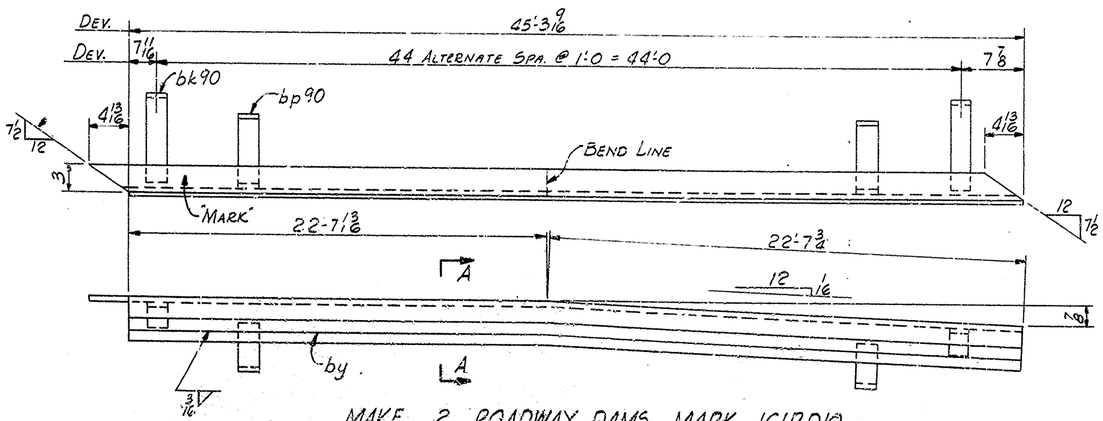

MAKE 2 ROADWAY DAMS MARK 161RD10

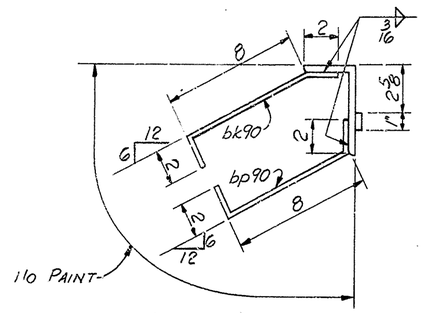

NOTES
ALL MATERIAL ASTM A36.
FOR GENERAL NOTES SEE DWG. GN1.

NASHVILLE BRIDGE COMPANY

SHOP ORDER NO. B-5728
WORK ORDER NO.
CONTRACT NO. C6736
ITEM
COMMONWEALTH OF KENTUCKY, DEPT. OF HIGHWAYS, BRIDGE OVER NORTHWESTERN PKWY & 22ND ST. JEFFERSON COUNTY
FABRICATION BESSEMER PLANT
BILL NO. 161
DRAWING NO. 161
WEIGHTS BY
CHECKED BY

SHOP	SHIPPING MARK	ITEM QUANT	ASSEMBLY MARK		SECTION	FINISHED LENGTH FT IN	ORDERED LENGTH FT IN		ITEM NO	REMARKS	SPECIF WEIGHT	AISC WEIGHT
					MAT. ASTM A36							
ONE	161 RD41	ONE		L	5×3×3/8	48 1/4	49-7		3826	120 AS SHOWN		19/31
		24	bk90	8/R	2 1/2×3/16	1 0			3819	607 BENT		19/33
		24	bp90	8/R	2 1/2×3/16	1 0			3819	607 BENT		19/33
		ONE	bp	8/R	1"×3/16	48 4 1/2			STK 3812	608 SHOP SPLICE TO SUIT MATL		19/32
2	161 RD43	2		L	5×3×3/8	34 5 9/16	36-9		3826	121 AS SHOWN		19/29
		34	bk90	8/R	2 1/2×3/16	1 0			3819	607 BENT		19/33
		34	bp90	8/R	2 1/2×3/16	1 0			3819	607 BENT		19/33
		2	bt	8/R	1"×3/16	34 5 9/16			STK 3812	608 SHOP SPLICE TO SUIT MATL		19/30
ONE	161 RD46	ONE		L	5×3×3/8	33 1/2	35-9		3826	121 AS SHOWN		19/29
		17	bk90	8/R	2 1/2×3/16	1 0			3819	607 BENT		19/33
		16	bp90	8/R	2 1/2×3/16	1 0			3819	607 BENT		19/33
		ONE	bx	8/R	1"×3/16	33 1/2			STK 3812	608 SHOP SPLICE TO SUIT MATL		19/30
ONE	161 RD12	ONE		L	5×3×3/8	32 5 1/2	34-7		3826	119 OPP. HAND		19/25
		16	bk90	8/R	2 1/2×3/16	1 0			3819	607 BENT		19/27
		16	bp90	8/R	2 1/2×3/16	1 0			3819	607 BENT		19/27
		ONE	bd	8/R	1"×3/16	32 5 1/2			STK 3812	608 SHOP SPLICE TO SUIT MATL		19/26
ONE	161 RD14	ONE		L	5×3×3/8	37 7 1/2	38-3		3826	124 OPP. HAND		19/22
		19	bk90	8/R	2 1/2×3/16	1 0			3819	607 BENT		19/24
		18	bp90	8/R	2 1/2×3/16	1 0			3819	607 BENT		19/24
		ONE	bg	8/R	1"×3/16	37 7 1/2			STK 3812	608 SHOP SPLICE TO SUIT MATL		19/23
ONE	161 RD15	ONE		L	5×3×3/8	32 5 3/4	34-7		3826	119 OPP. HAND		19/25
		16	bk90	8/R	2 1/2×3/16	1 0			3819	607 BENT		19/27
		16	bp90	8/R	2 1/2×3/16	1 0			3819	607 BENT		19/27
		ONE	bh	8/R	1"×3/16	32 5 3/4			STK 3812	608 SHOP SPLICE TO SUIT MATL		19/26
ONE	161 RD17	ONE		L	5×3×3/8	37 7 1/2	38-3		3826	124 OPP. HAND		19/22
		19	bk90	8/R	2 1/2×3/16	1 0			3819	607 BENT		19/24
		18	bp90	8/R	2 1/2×3/16	1 0			3819	607 BENT		19/24
		ONE	bm	8/R	1"×3/16	37 7 1/2			STK 3812	608 SHOP SPLICE TO SUIT MATL		19/23
2	161 RD42	2		L	5×3×3/8	34 9	36-9		3826	121 AS SHOWN		19/29
		34	bk90	8/R	2 1/2×3/16	1 0			3819	607 BENT		19/33
		34	bp90	8/R	2 1/2×3/16	1 0			3819	607 BENT		19/33
		2	bs	8/R	1"×3/16	34 5 3/4			STK 3812	608 SHOP SPLICE TO SUIT MATL		19/30
ONE	161 RD44	ONE		L	5×3×3/8	33 5 3/4	34-9		3826	121 AS SHOWN		19/29
		16	bk90	8/R	2 1/2×3/16	1 0			3819	607 BENT		19/33
		17	bp90	8/R	2 1/2×3/16	1 0			3819	607 BENT		19/33
		ONE	bv	8/R	1"×3/16	33 2 1/2			STK 3812	608 SHOP SPLICE TO SUIT MATL		19/30
ONE	161 RD45	ONE		L	5×3×3/8	48 8 11/16	49-0		3826	120 AS SHOWN		19/31
		24	bk90	8/R	2 1/2×3/16	1 0			3819	607 BENT		19/33
		24	bp90	8/R	2 1/2×3/16	1 0			3819	607 BENT		19/33
		ONE	bw	8/R	1"×3/16	48 5 1/16			STK 3812	608 SHOP SPLICE TO SUIT MATL		19/32
ONE	161 RD11	ONE		L	5×3×3/8	32 9 5/8	34-7		3826	119 OPP. HAND		19/25
		16	bk90	8/R	2 1/2×3/16	1 0			3819	607 BENT		19/27
		16	bp90	8/R	2 1/2×3/16	1 0			3819	607 BENT		19/27
		ONE	bc	8/R	1"×3/16	32 6 3/4			STK 3812	608 SHOP SPLICE TO SUIT MATL		19/26
ONE	161 RD13	ONE		L	5×3×3/8	37 11 3/8	38-3		3826	124 OPP. HAND		19/22
		18	bk90	8/R	2 1/2×3/16	1 0			3819	607 BENT		19/24
		19	bp90	8/R	2 1/2×3/16	1 0			3819	607 BENT		19/24
		ONE	bf	8/R	1"×3/16	37 8 3/8			STK 3812	608 SHOP SPLICE TO SUIT MATL		19/23
ONE	161 RD16	ONE		L	5×3×3/8	32 9 1/2	34-7		3826	119 OPP. HAND		19/25
		16	bk90	8/R	2 1/2×3/16	1 0			3819	607 BENT		19/27
		16	bp90	8/R	2 1/2×3/16	1 0			3819	607 BENT		19/27
		ONE	bk	8/R	1"×3/16	32 6 1/2			STK 3812	608 SHOP SPLICE TO SUIT MATL		19/26
ONE	161 RD18	ONE		L	5×3×3/8	37 10 1/2	38-3		3826	124 OPP. HAND		19/22
		18	bk90	8/R	2 1/2×3/16	1 0			3819	607 BENT		19/24
		19	bp90	8/R	2 1/2×3/16	1 0			3819	607 BENT		19/24
		ONE	bn	8/R	1"×3/16	37 8 1/4			STK 3812	608 SHOP SPLICE TO SUIT MATL		19/23
2	161 RD10	2		L	5×3×3/8	45 8 3/8	44-0		3826	122 BENT		19/30
		44	bk90	8/R	2 1/2×3/16	1 0			3819	607 BENT		19/33
		44	bp90	8/R	2 1/2×3/16	1 0			3819	607 BENT		19/33
		2	by	8/R	1"×3/16	45 3 1/2			STK 3812	608 SHOP SPLICED TO SUIT PLATE		19/31

ROADWAY DAMS
BRIDGE OVER NORTHWESTERN PKWY & 22ND ST
DEPT. OF HIGHWAYS, COMMONWEALTH OF KENTUCKY
JEFFERSON CTY. F.A.P. 164-2(13)2; SPSG-8273-76B1
CONTRACTOR: MATTINGLY BRIDGE CO.

NASHVILLE BRIDGE COMPANY
NASHVILLE, TENN.
BESSEMER PLANT

APPROVED FOR SHOP
WMF 9/6/70 CHIEF DRAFTSMAN
MK 9/8/70 CHIEF ENGINEER
REVISION NOTES

RIVETS NONE OR NOTED
HOLES NONE OR NOTED
FIELD CONN. } SEE GN1
SHOP PAINT }
FIELD

DRAWN BY J.B. DATE 1-13-70
111 CHARGET 69711 (TENSOR)
CHECKED BY V.M. DATE 1/26/70
DATE PRINTED

BILL MATERIAL NO. 161
CONT. C6736
S.O. B-5728
DRAWING NO. 161